**MARYLAND DEPARTMENT OF THE ENVIRONMENT**

**AIR AND RADIATION ADMINISTRATION**
**APPLICATION FOR A PERMIT TO CONSTRUCT**

**DOCKET # 10-22**

Applicant: City of Westminster

Proposal: One (1) natural gas-fired turbo rotary wastewater sludge dryer rated at 2.05 tons/hr equipped with a Sweco separator rated at 0.4 tons/hr, a cyclone dust collector, a Torit dust collector, and a trickling biofilter

Location: Westminster Wastewater Treatment Plant
1161 Old New Windsor Pike, Westminster, MD 21158

| ITEM | DESCRIPTION |
|---|---|
| 1 | Notice of Application and Opportunity to Request an Informational Meeting |
| | Permit to Construct Application Forms: |
| 2 | Application for Processing/Manufacturing Equipment Form 5 for a biosolids dryer |
| 3 | Application for Processing/Manufacturing Equipment Form 5 for a Sweco Separator |
| 4 | Application for Permit to Construct Gas Cleaning or Emission Control Equipment Form 6 for a Cyclone Dust Collector |
| 5 | Application for Permit to Construct Gas Cleaning or Emission Control Equipment Form 6 for a Torit Dust Collector |
| 6 | Application for Permit to Construct Gas Cleaning or Emission Control Equipment Form 6 for an Odor Treatment Biotrickling Filter |
| 7 | Brochure for the biosolids dryer |

**MARYLAND DEPARTMENT OF THE ENVIRONMENT**
**AIR AND RADIATION ADMINISTRATION**

# NOTICE OF APPLICATION AND OPPORTUNITY TO REQUEST AN INFORMATIONAL MEETING

The Maryland Department of the Environment, Air and Radiation Administration (ARA) received a permit-to-construct application from the City of Westminster on April 1, 2022, for the installation of one (1) natural gas-fired turbo rotary wastewater sludge dryer rated at 2.05 tons/hr, equipped with a Sweco separator rated at 0.4 tons/hr, a cyclone dust collector, a Torit dust collector, and a trickling biofilter. The proposed installation will be located at the Westminster Wastewater Treatment Plant, 1161 Old New Windsor Pike in Carroll County, Maryland.

Copies of the application and other supporting documents are available for public inspection on the Department's website. Look for Docket #10-22 at the following link:

https://mde.maryland.gov/programs/Permits/AirManagementPermits/Pages/index.aspx

Pursuant to the Environment Article, Section 1-603, Annotated Code of Maryland, the Department will hold an informational meeting to discuss the application and the permit review process if the Department receives a written request for a meeting within 10 working days from the date of the second publication of this notice. All requests for an informational meeting should be directed to the attention of Ms. Shannon Heafey, Air Quality Permits Program, Air and Radiation Administration, 1800 Washington Boulevard, Baltimore, Maryland 21230. Further information may be obtained by contacting Ms. Shannon Heafey at 410-537-4433 or via email at shannon.heafey@maryland.gov.

Christopher R. Hoagland, Director
Air and Radiation Administration

# AIR QUALITY PERMIT TO CONSTRUCT APPLICATION CHECKLIST

| OWNER OF EQUIPMENT/PROCESS | |
|---|---|
| COMPANY NAME: | City of Westminster |
| COMPANY ADDRESS: | 45 W Main Street Suite 1, Westminster MD 21157 |
| **LOCATION OF EQUIPMENT/PROCESS** | |
| PREMISES NAME: | Westminster WWTP - Solids Processing Building |
| PREMISES ADDRESS: | 1161 Old New Windsor Pike, Westminster, MD 21158 |
| **CONTACT INFORMATION FOR THIS PERMIT APPLICATION** | |
| CONTACT NAME: | Vance Summerhill |
| JOB TITLE: | Site Superintendent |
| PHONE NUMBER: | 410-848-4380 |
| EMAIL ADDRESS: | vsummerhill@westminstermd.gov |
| **DESCRIPTION OF EQUIPMENT OR PROCESS** | |
| Biosolids Dryer | |

Application is hereby made to the Department of the Environment for a Permit to Construct for the following equipment or process as required by the State of Maryland Air Quality Regulation, COMAR 26.11.02.09.

Check each item that you have submitted as part of your application package.

☒ Application package cover letter describing the proposed project

☒ Complete application forms (Note the number of forms included or NA if not applicable.)

No. 2 Form 5
No. NA Form 5T
No. NA Form 5EP
No. 3 Form 6
No. NA Form 10
No. 1 Form 11
No. NA Form 41
No. NA Form 42
No. NA Form 44

☒ Vendor/manufacturer specifications/guarantees

☒ Evidence of Workman's Compensation Insurance

☒ Process flow diagrams with emission points

☒ Site plan including the location of the proposed source and property boundary

☒ Material balance data and all emissions calculations

☒ Material Safety Data Sheets (MSDS) or equivalent information for materials processed and manufactured.

☐ Certificate of Public Convenience and Necessity (CPCN) waiver documentation from the Public Service Commission (1)

☐ Documentation that the proposed installation complies with local zoning and land use requirements (2)

(1) Required for emergency and non-emergency generators installed on or after October 1, 2001 and rated at 2001 kW or more.

(2) Required for applications subject to Expanded Public Participation Requirements.

**MARYLAND DEPARTMENT OF THE ENVIRONMENT**
Air and Radiation Management Administration ▪ Air Quality Permits Program
1800 Washington Blvd ▪ Baltimore, Maryland 21230
(410) 537-3230 ▪ 1-800-633-6101 ▪ www.mde.state.md.us

**APPLICATION FOR FUEL BURNING EQUIPMENT**

## Information Regarding Public Outreach

For Air Quality Permit to Construct applications subject to public review, applicants should consider the following information in the initial stages of preparing a permit application.

If you are not sure at the time you are applying for a permit whether public review of your application is required or for information on steps you can take to engage the surrounding community where your planned project will be located, please contact the Air Quality Permits Program at 410-537-3225 and seek their advice.

Communicating and engaging the local community as early as possible in your planning and development process is an important aspect of your project and should be considered a priority. Environmental Justice or "EJ" is a movement to inform, involve, and engage communities impacted by potential and planned environmental projects by affording citizens opportunities to learn about projects and discuss any concerns regarding impacts.

Although some permit applications are subject to a formal public review process prescribed by statute, the Department strongly encourages you to engage neighboring communities separate from and well ahead of the formal permitting process. Sharing your plans by way of community meetings, informational outreach at local gatherings or through local faith-based organizations can initiate a rewarding and productive dialogue that will reduce anxiety and establish a permanent link with your neighbors in the community.

All parties benefit when there is good communication. The Department can assist applicants in developing an outreach plan that fits the needs of both the company and the public.

# MARYLAND DEPARTMENT OF THE ENVIRONMENT

1800 Washington Blvd ▪ Baltimore, Maryland 21230
(410) 537-3230 ▪1-800-633-6101 ▪ www.mde.state.md.us

**Air and Radiation Management Administration ▪ Air Quality Permits Program**

## APPLICATION FOR PROCESSING/MANUFACTURING EQUIPMENT

Permit to Construct ☒ Registration Update ☐ Initial Registration ☐

**1A. Owner of Equipment/Company Name**

City of Westminster

**Mailing Address**

45 W Main Street Suite 1
Street Address

Westminster — Maryland — 21157
City — State — Zip

**Telephone Number**

( 410 ) 848-9000

**Signature**

Vance Summerhill

Vance Summerhill Site Superintendent
Print Name and Title

1 APRIL 2022
Date

**DO NOT WRITE IN THIS BLOCK**
**2. REGISTRATION NUMBER**

County No. (1-2) | Premises No. (3-6)
Registration Class (7) | Equipment No. (8-11)
Data Year (12-13) | Application Date

**1B. Equipment Location and Telephone Number (if different from above)**

1161 Old New Windsor Pike
Street Number and Street Name

Westminster — Maryland — 21158 — ( 410 ) 848-4380
City/Town — State — Zip — Telephone Number

Westminster Wastewater Treatment Plant
Premises Name (if different from above)

**3. Status (A= New, B= Modification to Existing Equipment, C= Existing Equipment)**

| Status (15) | New Construction Begun (MM/YY) (16-19) | New Construction Completed (MM/YY) (20-23) | Existing Initial Operation (MM/YY) (20-23) |
|---|---|---|---|
| A | 0 4 2 2 | 0 7 2 2 | |

**4. Describe this Equipment: Make, Model, Features, Manufacturer (include Maximum Hourly Input Rate, etc.)**

Wyse Turbo-Dyer designed for a wet cake input of 4,100 lbs/hr with 18% dry solids

**5. Workmen's Compensation Coverage** WC5-631-510805-032 (Binder/Policy Number) 4/1/2023 (Expiration Date)

Company HRI, Inc.

NOTE: Before a Permit to Construct may be issued by the Department, the applicant must provide the Department with proof of worker's compensation coverage as required under Section 1-202 of the Worker's Compensation Act.

**6A. Number of Pieces of Identical Equipment Units to be Registered/Permitted at this Time** 1

**6B. Number of Stack/Emission Points Associated with this Equipment** 1

## 7. Person Installing this Equipment (if different from Number 1 on Page 1)

Name Travis Boyd Title Senior Project Manager

Company HRI, Inc.

Mailing Address/Street 1750 West College Avenue

City/Town State College State PA Telephone ( 814 ) 278-6975

## 8. Major Activity, Product or Service of Company at this Location

Diversified construction company with expertise in highway, airport, water, sewer, treatment plants, bridges, and paving.

## 9. Control Devices Associated with this Equipment

None [ ] 24-0

| Simple/Multiple Cyclone | Spray/Adsorb Tower | Venturi Scrubber | Carbon Adsorber | Electrostatic Precipitator | Baghouse | Thermal/Catalytic Afterburner | Dry Scrubber |
|---|---|---|---|---|---|---|---|
| [ ] | [ ] | [ ] | [ ] | [ ] | [ ] | [ ] | [ ] |
| 24-1 | 24-2 | 24-3 | 24-4 | 24-5 | 24-6 | 24-7 | 24-8 |

Other

[x] Describe dust laden air sent to cyclone dust collector and further treated for odor via biotrickling filter.

24-9

## 10. Annual Fuel Consumption for this Equipment

| OIL-1000 GALLONS | SULFUR % | GRADE | NATURAL GAS-1000 $FT^3$ | LP GAS-100 GALLONS | GRADE |
|---|---|---|---|---|---|
| | | | | | |
| 26-31 | 32-33 | 34 | 35-41 | 42-45 | |

| COAL- TONS | SULFUR % | ASH% | WOOD-TONS | MOISTURE % |
|---|---|---|---|---|
| | | | | |
| 46-52 | 53-55 | 56-58 | 59-63 | 64-65 |

OTHER FUELS _____ (Specify Type) [ ] 66-1 ANNUAL AMOUNT CONSUMED _____ (Specify Units of Measure)

OTHER FUEL _____ (Specify Type) [ ] 66-2 ANNUAL AMOUNT CONSUMED _____ (Specify Units of Measure)

**1= Coke 2= COG 3=BFG 4=Other**

## 11. Operating Schedule (for this Equipment)

| Continuous Operation | Batch Process | Hours per Batch | Batch per Week | Hours per Day | Days Per Week | Days per Year |
|---|---|---|---|---|---|---|
| [ ] | [ ] | | [ ] | 2 4 | 3 | |
| 67-1 | 67-2 | 68-69 | | 70-71 | 72 | 73-75 |

Seasonal Variation in Operation:

| No Variation | Winter Percent | Spring Percent | Summer Percent | Fall Percent | (Total Seasons= 100%) |
|---|---|---|---|---|---|
| x | | | | | |
| 76 | 77-78 | 79-80 | 81-82 | 83-84 | |

**12. Equivalent Stack Innformation- is Exhaust through Doors, Windows, etc. Only?** (Y/N) N

85

If not, then

| Height Avove Ground (FT) | Inside Diameter at Top | Exit Temperature (°F) | Exit Velocity (FT/SEC) |
|---|---|---|---|
| | | | |
| 86-88 | 89-91 | 92-95 | 96-98 |

**NOTE:**
**Attach a block diagram of process/process line, indicating new equipment as reported on this form and all existing equipment, including control devices and emission points.**

**13. Input Materials (for this equipment only)**
**Is any of this data to be considered confidential?** N (Y or N)

| NAME | CAS NO. (IF APPLICABLE) | INPUT RATE PER HOUR | UNITS | PER YEAR | UNITS |
|---|---|---|---|---|---|
| 1. Wet Cake w/ 18% dry solids | | 4,100 | lbs/hr | 7,675 | tons/yr |
| 2. | | | | | |
| 3. | | | | | |
| 4. | | | | | |
| 5. | | | | | |
| 6. | | | | | |
| 7. | | | | | |
| 8. | | | | | |
| 9. | | | | | |
| **TOTAL** | | | | | |

**14. Output Materials (for this equipment)**
**Process/Product Stream**

| NAME | CAS NO. (IF APPLICABLE) | OUTPUT RATE PER HOUR | UNITS | PER YEAR | UNITS |
|---|---|---|---|---|---|
| 1. Dry Solids w/ 92% solids | | 790 | lbs/hr | 1,479 | tons/yr |
| 2. | | | | | |
| 3. | | | | | |
| 4. | | | | | |
| 5. | | | | | |
| 6. | | | | | |
| 7. | | | | | |
| 8. | | | | | |
| 9. | | | | | |
| **TOTAL** | | | | | |

**15. Waste Streams- Solid and Liquid**

| NAME | CAS NO. (IF APPLICABLE) | OUTPUT RATE PER HOUR | UNITS | PER YEAR | UNITS |
|---|---|---|---|---|---|
| 1. N/A | | | | | |
| 2. | | | | | |
| 3. | | | | | |
| 4. | | | | | |
| 5. | | | | | |
| 6. | | | | | |
| 7. | | | | | |
| 8. | | | | | |
| 9. | | | | | |
| **TOTAL** | | | | | |

## 16. Total Stack Emissions (for this equipment only) in Pounds Per Operating Day

| Particulate Matter | Oxides of Sulfur | Oxides of Nitrogen |
|---|---|---|
| 99-104 | 105-110 | 111-116 |
| **Carbon Monoxide** | **Volatile Organic Compounds** | **PM-10** |
| 177-122 | 123-128 | 129-134 |

## 17. Total Fugitive Emissions (for this equipment only) in Pounds Per Operating Day

| Particulate Matter | Oxides of Sulfur | Oxides of Nitrogen |
|---|---|---|
| 135-139 | 140-144 | 145-149 |
| **Carbon Monoxide** | **Volatile Organic Compounds** | **PM-10** |
| 150-154 | 155-159 | 160-164 |

**Method Used to Determine Emissions** **(1= Estimate 2= Emission Factor 3= Stack Test 4= Other)**

| TSP | SOX | NOX | CO | VOC | PM10 |
|---|---|---|---|---|---|
| 165 | 166 | 167 | 168 | 169 | 170 |

**AIR AND RADIATION MANAGEMENT ADMINISTRATION USE ONLY**

**18. Date Rec'd. Local** _____ **Date Rec'd. State** _____ **Return to Local Jurisdiction** Date_____ By_____

**Reviewed by Local Jurisdiction** Date_____ By_____ **Reviewed by State** Date_____ By_____

**19. Inventory Date** **Month/Year** 171-174 **Equipment Code** 175-177 **SCC Code** 178-185

**20. Annual Operating Rate** 186-192 **Maximum Design Hourly Rate** 193-199 **Permit to Operate Month** 200-201 **Transaction Date (MM/DD/YR)** 202-207

**Staff Code** 208-210 **VOC Code** 211 212 **SIP Code** 213 214 **Regulation Code** 215-218 **Confidentiality** 219

**Point Description** 220-238 **Action** 239 A: Add C: Change

# AIR QUALITY PERMIT TO CONSTRUCT APPLICATION CHECKLIST

| OWNER OF EQUIPMENT/PROCESS | |
|---|---|
| COMPANY NAME: | City of Westminster |
| COMPANY ADDRESS: | 45 W Main Street Suite 1, Westminster MD 21157 |
| **LOCATION OF EQUIPMENT/PROCESS** | |
| PREMISES NAME: | Westminster WWTP - Solids Processing Building |
| PREMISES ADDRESS: | 1161 Old New Windsor Pike, Westminster, MD 21158 |
| **CONTACT INFORMATION FOR THIS PERMIT APPLICATION** | |
| CONTACT NAME: | Vance Summerhill |
| JOB TITLE: | Site Superintendent |
| PHONE NUMBER: | 410-848-4380 |
| EMAIL ADDRESS: | vsummerhill@westminstermd.gov |
| **DESCRIPTION OF EQUIPMENT OR PROCESS** | |
| Separator | |

Application is hereby made to the Department of the Environment for a Permit to Construct for the following equipment or process as required by the State of Maryland Air Quality Regulation, COMAR 26.11.02.09.

Check each item that you have submitted as part of your application package.

- ☒ Application package cover letter describing the proposed project
- ☐ Complete application forms (Note the number of forms included or NA if not applicable.)

  No. 2 Form 5
  No. NA Form 5T
  No. NA Form 5EP
  No. 3 Form 6
  No. NA Form 10
  No. 1 Form 11
  No. NA Form 41
  No. NA Form 42
  No. NA Form 44

- ☒ Vendor/manufacturer specifications/guarantees
- ☒ Evidence of Workman's Compensation Insurance
- ☒ Process flow diagrams with emission points
- ☒ Site plan including the location of the proposed source and property boundary
- ☐ Material balance data and all emissions calculations
- ☒ Material Safety Data Sheets (MSDS) or equivalent information for materials processed and manufactured.
- ☐ Certificate of Public Convenience and Necessity (CPCN) waiver documentation from the Public Service Commission (1)
- ☐ Documentation that the proposed installation complies with local zoning and land use requirements (2)

(1) Required for emergency and non-emergency generators installed on or after October 1, 2001 and rated at 2001 kW or more.

(2) Required for applications subject to Expanded Public Participation Requirements.

**MARYLAND DEPARTMENT OF THE ENVIRONMENT**
Air and Radiation Management Administration ▪ Air Quality Permits Program
1800 Washington Blvd ▪ Baltimore, Maryland 21230
(410) 537-3230 ▪ 1-800-633-6101 ▪ www.mde.state.md.us

**APPLICATION FOR FUEL BURNING EQUIPMENT**

## Information Regarding Public Outreach

For Air Quality Permit to Construct applications subject to public review, applicants should consider the following information in the initial stages of preparing a permit application.

If you are not sure at the time you are applying for a permit whether public review of your application is required or for information on steps you can take to engage the surrounding community where your planned project will be located, please contact the Air Quality Permits Program at 410-537-3225 and seek their advice.

Communicating and engaging the local community as early as possible in your planning and development process is an important aspect of your project and should be considered a priority. Environmental Justice or "EJ" is a movement to inform, involve, and engage communities impacted by potential and planned environmental projects by affording citizens opportunities to learn about projects and discuss any concerns regarding impacts.

Although some permit applications are subject to a formal public review process prescribed by statute, the Department strongly encourages you to engage neighboring communities separate from and well ahead of the formal permitting process. Sharing your plans by way of community meetings, informational outreach at local gatherings or through local faith-based organizations can initiate a rewarding and productive dialogue that will reduce anxiety and establish a permanent link with your neighbors in the community.

All parties benefit when there is good communication. The Department can assist applicants in developing an outreach plan that fits the needs of both the company and the public.

# MARYLAND DEPARTMENT OF THE ENVIRONMENT

1800 Washington Blvd ▪ Baltimore, Maryland 21230
(410) 537-3230 ▪1-800-633-6101 ▪ www.mde.state.md.us

**Air and Radiation Management Administration ▪ Air Quality Permits Program**

## APPLICATION FOR PROCESSING/MANUFACTURING EQUIPMENT

Permit to Construct ☒ Registration Update ☐ Initial Registration ☐

**1A. Owner of Equipment/Company Name**

City of Westminster

**Mailing Address**

45 W Main Street Suite 1
Street Address

Westminster (City) Maryland (State) 21157 (Zip)

**Telephone Number**

( 410 ) 848-9000

**Signature**

Vance Summerhill

Vance Summerhill Site Superintendent
Print Name and Title

1 APRIL 2022
Date

**DO NOT WRITE IN THIS BLOCK**
**2. REGISTRATION NUMBER**

County No. (1-2) Premises No. (3-6)
Registration Class (7) Equipment No. (8-11)
Data Year (12-13) Application Date

**1B. Equipment Location and Telephone Number (if different from above)**

1161 Old New Windsor Pike
Street Number and Street Name

Westminster (City/Town) Maryland (State) 21158 (Zip) ( 410 ) 848-4380 (Telephone Number)

Westminster Wastewater Treatment Plant
Premises Name (if different from above)

**3. Status (A= New, B= Modification to Existing Equipment, C= Existing Equipment)**

| Status (15) | New Construction Begun (MM/YY) (16-19) | New Construction Completed (MM/YY) (20-23) | Existing Initial Operation (MM/YY) (20-23) |
|---|---|---|---|
| A | 0 4 2 2 | 0 7 2 2 | |

**4. Describe this Equipment: Make, Model, Features, Manufacturer (include Maximum Hourly Input Rate, etc.)**

ZS30 Vibro Energy Separator with 1/2 HP motion generator by SWECO.

**5. Workmen's Compensation Coverage** WC5-631-510805-032 (Binder/Policy Number) 4/1/2023 (Expiration Date)

Company HRI, Inc.

NOTE: Before a Permit to Construct may be issued by the Department, the applicant must provide the Department with proof of worker's compensation coverage as required under Section 1-202 of the Worker's Compensation Act.

**6A. Number of Pieces of Identical Equipment Units to be Registered/Permitted at this Time** 1

**6B. Number of Stack/Emission Points Associated with this Equipment** 1

## 7. Person Installing this Equipment (if different from Number 1 on Page 1)

Name Travis Boyd Title Senior Project Manger

Company HRI, Inc.

Mailing Address/Street 1750 West College Avenue

City/Town State College State PA Telephone ( 814 ) 278-6975

## 8. Major Activity, Product or Service of Company at this Location

Diversified construction company with expertise in highway, airport, water, sewer, treatment plants, bridges, and paving.

## 9. Control Devices Associated with this Equipment

None [ ] 24-0

| Simple/Multiple Cyclone | Spray/Adsorb Tower | Venturi Scrubber | Carbon Adsorber | Electrostatic Precipitator | Baghouse | Thermal/Catalytic Afterburner | Dry Scrubber |
|---|---|---|---|---|---|---|---|
| [ ] | [ ] | [ ] | [ ] | [ ] | [ ] | [ ] | [ ] |
| 24-1 | 24-2 | 24-3 | 24-4 | 24-5 | 24-6 | 24-7 | 24-8 |

Other

[x] Describe Dust laden air sent to cyclone dust collector and further treated for odor via biotrickling filter

24-9

## 10. Annual Fuel Consumption for this Equipment

| OIL-1000 GALLONS | SULFUR % | GRADE | NATURAL GAS-1000 $FT^3$ | LP GAS-100 GALLONS | GRADE |
|---|---|---|---|---|---|
| | | | | | |
| 26-31 | 32-33 | 34 | 35-41 | 42-45 | |

| COAL- TONS | SULFUR % | ASH% | WOOD-TONS | MOISTURE % |
|---|---|---|---|---|
| | | | | |
| 46-52 | 53-55 | 56-58 | 59-63 | 64-65 |

OTHER FUELS _____ (Specify Type) [ ] 66-1 ANNUAL AMOUNT CONSUMED _____ (Specify Units of Measure)

OTHER FUEL _____ (Specify Type) [ ] 66-2 ANNUAL AMOUNT CONSUMED _____ (Specify Units of Measure)

**1= Coke 2= COG 3=BFG 4=Other**

## 11. Operating Schedule (for this Equipment)

| Continuous Operation | Batch Process | Hours per Batch | Batch per Week | Hours per Day | Days Per Week | Days per Year |
|---|---|---|---|---|---|---|
| [ ] | [ ] | | | 2 4 | 3 | |
| 67-1 | 67-2 | 68-69 | | 70-71 | 72 | 73-75 |

Seasonal Variation in Operation:

| No Variation | Winter Percent | Spring Percent | Summer Percent | Fall Percent | (Total Seasons= 100%) |
|---|---|---|---|---|---|
| x | | | | | |
| 76 | 77-78 | 79-80 | 81-82 | 83-84 | |

**12. Equivalent Stack Innformation- is Exhaust through Doors, Windows, etc. Only?** (Y/N) N

85

If not, then

| Height Avove Ground (FT) | Inside Diameter at Top | Exit Temperature (°F) | Exit Velocity (FT/SEC) |
|---|---|---|---|
| | | | |
| 86-88 | 89-91 | 92-95 | 96-98 |

**NOTE:**
**Attach a block diagram of process/process line, indicating new equipment as reported on this form and all existing equipment, including control devices and emission points.**

**13. Input Materials (for this equipment only)**
**Is any of this data to be considered confidential?** N (Y or N)

| NAME | CAS NO. (IF APPLICABLE) | INPUT RATE PER HOUR | UNITS | PER YEAR | UNITS |
|---|---|---|---|---|---|
| 1 Dry Solids w/ 92% solids | | 790 | lbs/hr | 1,479 | tons/yr |
| 2. | | | | | |
| 3. | | | | | |
| 4. | | | | | |
| 5. | | | | | |
| 6. | | | | | |
| 7. | | | | | |
| 8. | | | | | |
| 9. | | | | | |
| **TOTAL** | | | | | |

**14. Output Materials (for this equipment)**
**Process/Product Stream**

| NAME | CAS NO. (IF APPLICABLE) | OUTPUT RATE PER HOUR | UNITS | PER YEAR | UNITS |
|---|---|---|---|---|---|
| 1. Dry Solids w/ 92% solids | | 727 | lbs/hr | 1,360.6 | tons/yr |
| 2. | | | | | |
| 3. | | | | | |
| 4. | | | | | |
| 5. | | | | | |
| 6. | | | | | |
| 7. | | | | | |
| 8. | | | | | |
| 9. | | | | | |
| **TOTAL** | | | | | |

**15. Waste Streams- Solid and Liquid**

| NAME | CAS NO. (IF APPLICABLE) | OUTPUT RATE PER HOUR | UNITS | PER YEAR | UNITS |
|---|---|---|---|---|---|
| 1. Dry Solids w/ 92% solids | | 63 | lbs/hr | 118.4 | tons/yr |
| 2. | | | | | |
| 3. | | | | | |
| 4. | | | | | |
| 5. | | | | | |
| 6. | | | | | |
| 7. | | | | | |
| 8. | | | | | |
| 9. | | | | | |
| **TOTAL** | | | | | |

## 16. Total Stack Emissions (for this equipment only) in Pounds Per Operating Day

| Particulate Matter | Oxides of Sulfur | Oxides of Nitrogen |
|---|---|---|
| 99-104 | 105-110 | 111-116 |

| Carbon Monoxide | Volatile Organic Compounds | PM-10 |
|---|---|---|
| 177-122 | 123-128 | 129-134 |

## 17. Total Fugitive Emissions (for this equipment only) in Pounds Per Operating Day

| Particulate Matter | Oxides of Sulfur | Oxides of Nitrogen |
|---|---|---|
| 135-139 | 140-144 | 145-149 |

| Carbon Monoxide | Volatile Organic Compounds | PM-10 |
|---|---|---|
| 150-154 | 155-159 | 160-164 |

**Method Used to Determine Emissions** **(1= Estimate 2= Emission Factor 3= Stack Test 4= Other)**

| TSP | SOX | NOX | CO | VOC | PM10 |
|---|---|---|---|---|---|
| 165 | 166 | 167 | 168 | 169 | 170 |

**AIR AND RADIATION MANAGEMENT ADMINISTRATION USE ONLY**

**18. Date Rec'd. Local** _____ **Date Rec'd. State** _____ **Return to Local Jurisdiction** Date_____ By_____

**Reviewed by Local Jurisdiction** Date_____ By_____ **Reviewed by State** Date_____ By_____

**19. Inventory Date** **Month/Year** 171-174 **Equipment Code** 175-177 **SCC Code** 178-185

**20. Annual Operating Rate** 186-192 **Maximum Design Hourly Rate** 193-199 **Permit to Operate Month** 200-201 **Transaction Date (MM/DD/YR)** 202-207

**Staff Code** 208-210 **VOC Code** 211 212 **SIP Code** 213 214 **Regulation Code** 215-218 **Confidentiality** 219

**Point Description** 220-238 **Action** 239 A: Add C: Change

Form Number: 5
Rev. 9/27/2002
TTY Users 1-800-735-2258


Recycled Paper

# AIR QUALITY PERMIT TO CONSTRUCT APPLICATION CHECKLIST

| OWNER OF EQUIPMENT/PROCESS | |
|---|---|
| COMPANY NAME: | City of Westminster |
| COMPANY ADDRESS: | 45 W Main Street Suite 1, Westminster MD 21157 |
| **LOCATION OF EQUIPMENT/PROCESS** | |
| PREMISES NAME: | Westminster WWTP |
| PREMISES ADDRESS: | 1161 Old New Windsor Pike, Westminster, MD 21158 |
| **CONTACT INFORMATION FOR THIS PERMIT APPLICATION** | |
| CONTACT NAME: | Vance Summerhill |
| JOB TITLE: | Site Superintendent |
| PHONE NUMBER: | 410-848-4380 |
| EMAIL ADDRESS: | vsummerhill@westminstermd.gov |
| **DESCRIPTION OF EQUIPMENT OR PROCESS** | |
| Cyclone Dust Collector | |

Application is hereby made to the Department of the Environment for a Permit to Construct for the following equipment or process as required by the State of Maryland Air Quality Regulation, COMAR 26.11.02.09.

Check each item that you have submitted as part of your application package.

☒ Application package cover letter describing the proposed project

☐ Complete application forms (Note the number of forms included or NA if not applicable.)

No. 2 Form 5
No. NA Form 5T
No. NA Form 5EP
No. 3 Form 6
No. NA Form 10
No. 1 Form 11
No. NA Form 41
No. NA Form 42
No. NA Form 44

☒ Vendor/manufacturer specifications/guarantees

☒ Evidence of Workman's Compensation Insurance

☒ Process flow diagrams with emission points

☒ Site plan including the location of the proposed source and property boundary

☒ Material balance data and all emissions calculations

☐ Material Safety Data Sheets (MSDS) or equivalent information for materials processed and manufactured.

☐ Certificate of Public Convenience and Necessity (CPCN) waiver documentation from the Public Service Commission (1)

☐ Documentation that the proposed installation complies with local zoning and land use requirements (2)

(1) Required for emergency and non-emergency generators installed on or after October 1, 2001 and rated at 2001 kW or more.

(2) Required for applications subject to Expanded Public Participation Requirements.

# MARYLAND DEPARTMENT OF THE ENVIRONMENT

1800 Washington Blvd ▪ Baltimore, Maryland 21230
(410) 537-3230 ▪ 1-800-633-6101 ▪ www.mde.state.md.us

**Air and Radiation Management Administration ▪ Air Quality Permits Program**

## APPLICATION FOR PERMIT TO CONSTRUCT
### GAS CLEANING OR EMISSION CONTROL EQUIPMENT

| 1. Owner of Installation | Telephone No. | | Date of Application |
|---|---|---|---|
| City of Westminster | 410-848-900 | | |
| **2. Mailing Address** | **City** | **Zip Code** | **County** |
| 45 W Main Street Suite 1 | Westminster | 21157 | Carroll |
| **3. Equipment Location** | **City/Town or P.O.** | | **County** |
| 1161 Old New Windsor Pike | Westminster | | Carroll |
| **4. Signature of Owner or Operator** | **Title** | | **Print or Type Name** |
| Vance Summerhill | Site Superintendent | | Vance Summerhill |

**5. Application Type:** Alteration ☐ New Construction ☒

**6. Date Construction is to Start:** 01/04/2022 **Completion Date (Estimate):** 01/07/2022

**7. Type of Gas Cleaning or Emission Control Equipment:**

Simple Cyclone ☒ Multiple Cyclone ☐ Afterburner ☐ Electrostatic Precipitator ☐

Scrubber ☐ _____ (type) Other ☐ _____ (type)

**8. Gas Cleaning Equipment Manufacturer / Model No. / Collection Efficiency (Design Criteria)**

Airecon Cyclones Model T 2/1 Collection Efficiency - 97% by wt > 10 microns

**9. Type of Equipment which Control Equipment is to Service:**

Biosolids Dryer

**10. Stack Test to be Conducted:**

Yes ☐ No ☐ _____ (Stack Test to be Conducted By) _____ (Date)

**11. Cost of Equipment** _____

**Estimated Erection Cost** _____

Form number: 6
Revision date: 0/2000
TTY Users 1-800-735-2258


Recycled Paper

## 12. The Following Shall Be Design Criteria:

| | INLET | | OUTLET | |
|---|---|---|---|---|
| Gas Flow Rate | 16,526 | ACFM* | 16,526 | ACFM* |
| Gas Temperature | 250 | °F | 250 | °F |
| Gas Pressure | | INCHES W.G. | | INCHES W.G. |
| | PRESSURE DROP 6" w.c. | | | |
| Dust Loading | | GRAINS/ACFD** | | GRAINS/ACFD** |
| Moisture Content | 17.2 | % | 17.2 | % |
| OR | | | | |
| Wet Bulb Temperature | | °F | | °F |
| Liquid Flow Rate (Wet Scrubber) | | GALLONS/MINUTE | | |

(WHEN SCRUBBER LIQUID OTHER THAN WATER INDICATE COMPOSITION OF SCRUBBING MEDIUM IN WEIGHT %)

*= ACTUAL CUBIC FEET PER MINUTE **= ACTUAL CUBIC FEET DRY

**WHEN APPLICATION INVOLVES THE REDUCTION OF GASEOUS POLLUTANTS, PROVIDE THE CONCENTRATION OF EACH POLLUTANT IN THE GAS STREAM IN VOLUME PERCENT. INCLUDE THE COMPOSITION OF THE GASES ENTERING THE CLEANING DEVICE AND THE COMPOSITION OF EXHAUSTED GASES BEING DISCHARGED INTO THE ATMOSPHERE. USE AVAILABLE SPACE IN ITEM 15 ON PAGE 3.**

## 13. Particle Size Analysis

| Size of Dust Particles Entering Cleaning Unit | % of Total Dust | % to be Collected |
|---|---|---|
| 0 to 10 Microns | | |
| 10 to 44 Microns | | |
| Larger than 44 Microns | | |

## 14. For Afterburner Construction Only:

Volume of Contaminated Air _____ CFM (DO NOT INCLUDE COMBUSTION AIR)

Gas Inlet Temperature _____ °F

Capacity of Afterburner _____ BTU/HR

Diameter (or area) of Afterburner Throat _____

Combustion Chamber _____ (diameter) _____ (length) Operating Temperature at Afterburner _____ °F

Retention Time of Gases _____

**15. Show Location of Dust Cleaning Equipment in the System. Draw or Sketch Flow Diagram Showing Emission Path from Source to Exhaust Point to Atmosphere.**

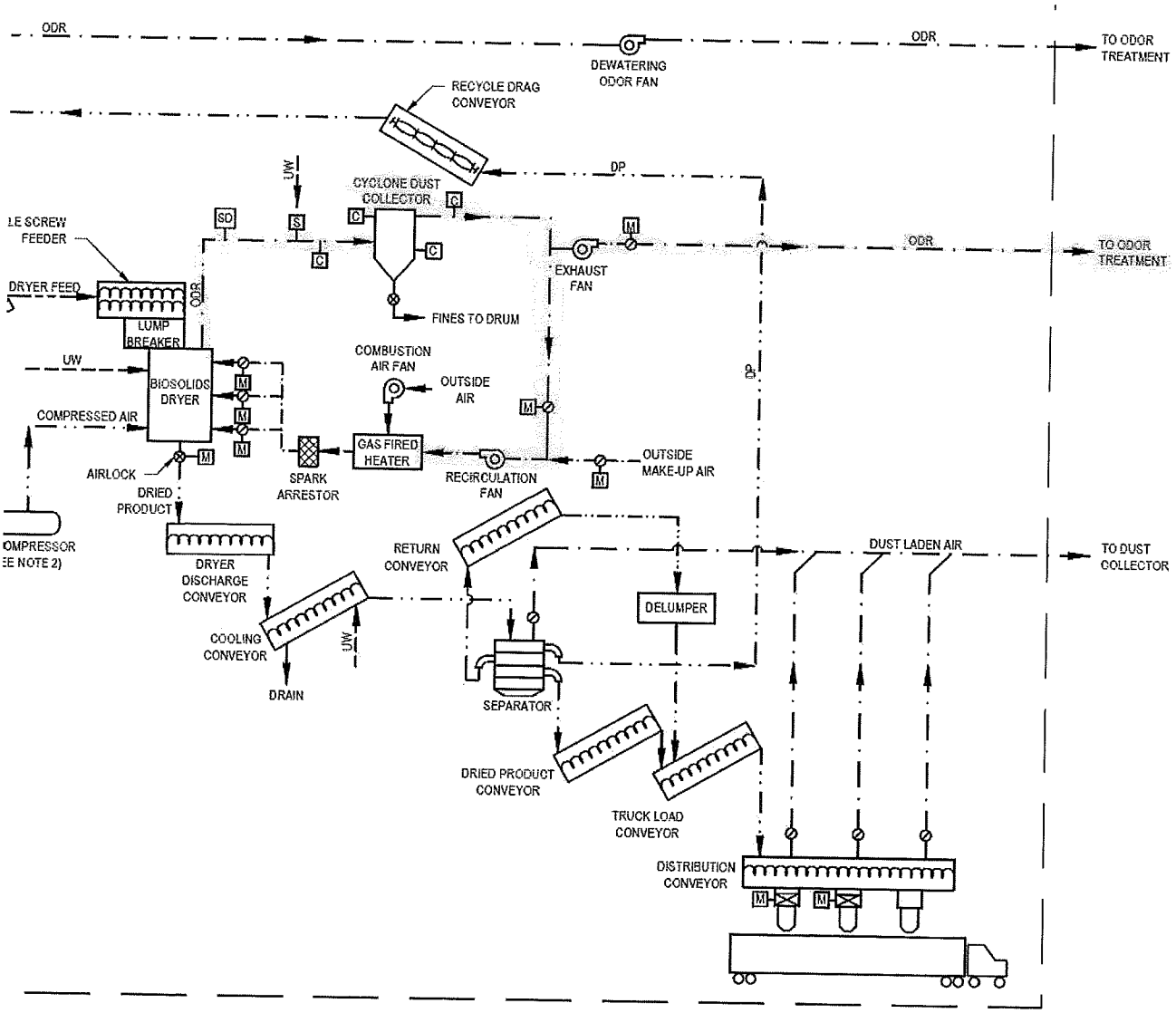

Date Received: Local _____ State _____

Acknowledgement Date: _____

By _____

Reviewed By:

Local _____

State _____

Returned to Local:

Date_____

By _____

Application Returned to Applicant:

Date_____

By _____

REGISTRATION NUMBER OF ASSOCIATED EQUIPMENT: ☐ ☐☐☐☐

PREMISES NUMBER: ☐☐ ☐☐☐☐

Emission Calculations Revised By _____ Date _____

# AIR QUALITY PERMIT TO CONSTRUCT APPLICATION CHECKLIST

| OWNER OF EQUIPMENT/PROCESS | |
|---|---|
| COMPANY NAME: | City of Westminster |
| COMPANY ADDRESS: | 45 W Main Street Suite 1, Westminster MD 21157 |
| **LOCATION OF EQUIPMENT/PROCESS** | |
| PREMISES NAME: | Westminster WWTP |
| PREMISES ADDRESS: | 1161 Old New Windsor Pike, Westminster, MD 21158 |
| **CONTACT INFORMATION FOR THIS PERMIT APPLICATION** | |
| CONTACT NAME: | Vance Summerhill |
| JOB TITLE: | Site Superintendent |
| PHONE NUMBER: | 410-848-4380 |
| EMAIL ADDRESS: | vsummerhill@westminstermd.gov |
| **DESCRIPTION OF EQUIPMENT OR PROCESS** | |
| Dust Collector | |

Application is hereby made to the Department of the Environment for a Permit to Construct for the following equipment or process as required by the State of Maryland Air Quality Regulation, COMAR 26.11.02.09.

Check each item that you have submitted as part of your application package.

- ☒ Application package cover letter describing the proposed project
- ☒ Complete application forms (Note the number of forms included or NA if not applicable.)

  No. 2 Form 5
  No. NA Form 5T
  No. NA Form 5EP
  No. 3 Form 6
  No. NA Form 10
  No. 1 Form 11
  No. NA Form 41
  No. NA Form 42
  No. NA Form 44

- ☒ Vendor/manufacturer specifications/guarantees
- ☒ Evidence of Workman's Compensation Insurance
- ☒ Process flow diagrams with emission points
- ☒ Site plan including the location of the proposed source and property boundary
- ☐ Material balance data and all emissions calculations
- ☐ Material Safety Data Sheets (MSDS) or equivalent information for materials processed and manufactured.
- ☐ Certificate of Public Convenience and Necessity (CPCN) waiver documentation from the Public Service Commission (1)
- ☐ Documentation that the proposed installation complies with local zoning and land use requirements (2)

(1) Required for emergency and non-emergency generators installed on or after October 1, 2001 and rated at 2001 kW or more.

(2) Required for applications subject to Expanded Public Participation Requirements.

# MARYLAND DEPARTMENT OF THE ENVIRONMENT

1800 Washington Blvd ▪ Baltimore, Maryland 21230
(410) 537-3230 ▪ 1-800-633-6101 ▪ www.mde.state.md.us

**Air and Radiation Management Administration ▪ Air Quality Permits Program**

## APPLICATION FOR PERMIT TO CONSTRUCT
### GAS CLEANING OR EMISSION CONTROL EQUIPMENT

**1. Owner of Installation** | **Telephone No.** | **Date of Application**
City of Westminster | 410-848-900

**2. Mailing Address** | **City** | **Zip Code** | **County**
45 W Main Street Suite 1 | Westminster | 21157 | Carroll

**3. Equipment Location** | **City/Town or P.O.** | **County**
1161 Old New Windsor Pike | Westminster | Carroll

**4. Signature of Owner or Operator** | **Title** | **Print or Type Name**
Vance Summerhill | Site Superintendent | Vance Summerhill

**5. Application Type:** **Alteration** ☐ **New Construction** [x]

**6. Date Construction is to Start:** 01/04/2022 **Completion Date (Estimate):** 01/07/2022

**7. Type of Gas Cleaning or Emission Control Equipment:**

**Simple Cyclone** ☐ **Multiple Cyclone** ☐ **Afterburner** ☐ **Electrostatic Precipitator** ☐

**Scubber** ☐ _____ (type) **Other** [x] Pulse-jet dust collector system (type)

**8. Gas Cleaning Equipment Manufacturer** | **Model No.** | **Collection Efficiency (Design Criteria)**
Donaldson Company, Inc. | DFE 2 - 4 Dust Collector

**9. Type of Equipment which Control Equipment is to Service:**
Biosolids separator and distribution conveyor loading spouts

**10. Stack Test to be Conducted:**

**Yes** ☐ **No** ☐ _____ (Stack Test to be Conducted By) _____ (Date)

**11. Cost of Equipment** $34,830

**Estimated Erection Cost** _____

Form number: 6
Revision date: 0/2000
TTY Users 1-800-735-2258


Recycled Paper

## 12. The Following Shall Be Design Criteria:

| | INLET | | OUTLET | |
|---|---|---|---|---|
| Gas Flow Rate | 1,000 | ACFM* | 1,000 | ACFM* |
| Gas Temperature | 180 | °F | 180 | °F |
| Gas Pressure | 23.5 | INCHES W.G. | 23.5 | INCHES W.G. |
| | PRESSURE DROP _____ | | | |
| Dust Loading | _____ | GRAINS/ACFD** | _____ | GRAINS/ACFD** |
| Moisture Content OR | 3.72 | % | _____ | % |
| Wet Bulb Temperature | _____ | °F | _____ | °F |
| Liquid Flow Rate (Wet Scrubber) | _____ | GALLONS/MINUTE | | |

(WHEN SCRUBBER LIQUID OTHER THAN WATER INDICATE COMPOSITION OF SCRUBBING MEDIUM IN WEIGHT %)

*= ACTUAL CUBIC FEET PER MINUTE **= ACTUAL CUBIC FEET DRY

**WHEN APPLICATION INVOLVES THE REDUCTION OF GASEOUS POLLUTANTS, PROVIDE THE CONCENTRATION OF EACH POLLUTANT IN THE GAS STREAM IN VOLUME PERCENT. INCLUDE THE COMPOSITION OF THE GASES ENTERING THE CLEANING DEVICE AND THE COMPOSITION OF EXHAUSTED GASES BEING DISCHARGED INTO THE ATMOSPHERE. USE AVAILABLE SPACE IN ITEM 15 ON PAGE 3.**

## 13. Particle Size Analysis

| Size of Dust Particles Entering Cleaning Unit | % of Total Dust | % to be Collected |
|---|---|---|
| 0 to 10 Microns | _____ | _____ |
| 10 to 44 Microns | _____ | _____ |
| Larger than 44 Microns | _____ | _____ |

## 14. For Afterburner Construction Only:

Volume of Contaminated Air _____ CFM (DO NOT INCLUDE COMBUSTION AIR)

Gas Inlet Temperature _____ °F

Capacity of Afterburner _____ BTU/HR

Diameter (or area) of Afterburner Throat_____

Combustion Chamber_____ _____ Operating Temperature at Afterburner _____ °F
(diameter) (length)

Retention Time of Gases _____

**15. Show Location of Dust Cleaning Equipment in the System. Draw or Sketch Flow Diagram Showing Emission Path from Source to Exhaust Point to Atmosphere.**

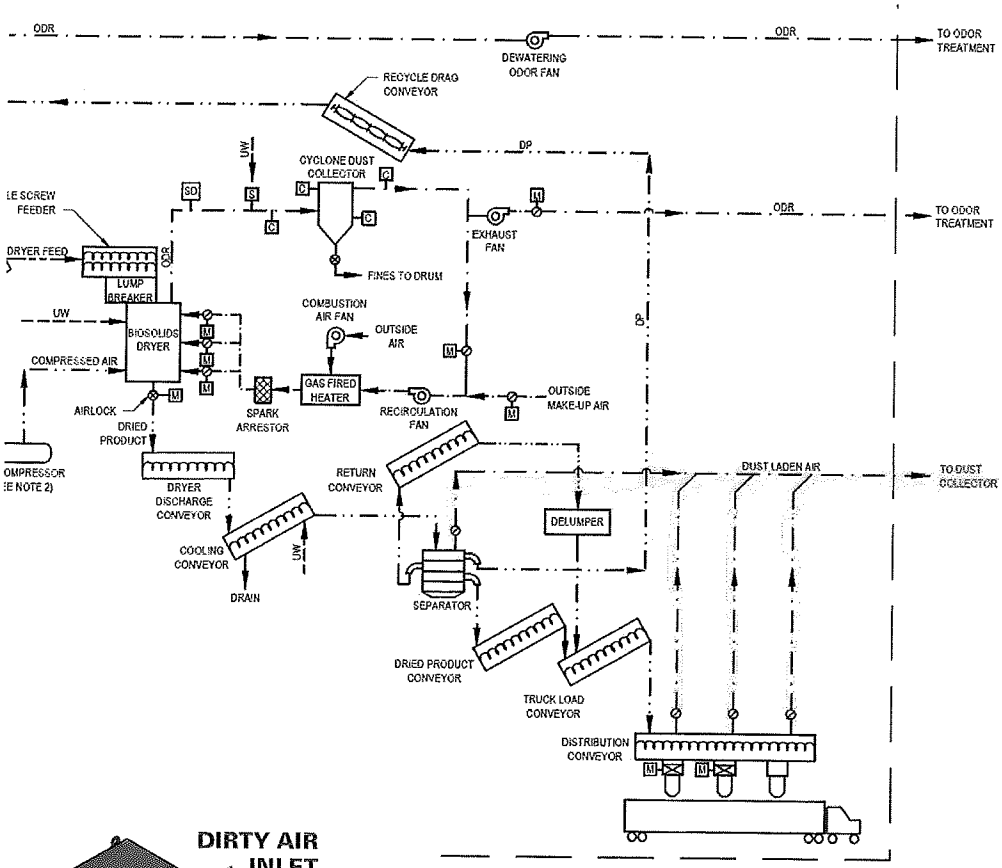


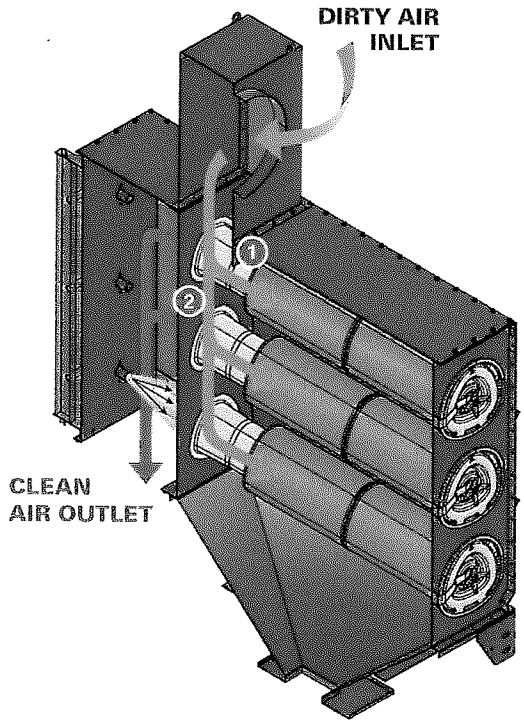

Date Received: Local _____ State _____

Acknowledgement Date: _____

By _____

Reviewed By:

Local _____

State _____

Returned to Local:

Date_____

By _____

Application Returned to Applicant:

Date_____

By _____

REGISTRATION NUMBER OF ASSOCIATED EQUIPMENT: ☐ ☐☐☐☐

PREMISES NUMBER: ☐☐ ☐☐☐☐

Emission Calculations Revised By _____ Date _____

# AIR QUALITY PERMIT TO CONSTRUCT APPLICATION CHECKLIST

| OWNER OF EQUIPMENT/PROCESS | |
|---|---|
| COMPANY NAME: | City of Westminster |
| COMPANY ADDRESS: | 45 W Main Street Suite 1, Westminster MD 21157 |
| **LOCATION OF EQUIPMENT/PROCESS** | |
| PREMISES NAME: | Westminster WWTP |
| PREMISES ADDRESS: | 1161 Old New Windsor Pike, Westminster, MD 21158 |
| **CONTACT INFORMATION FOR THIS PERMIT APPLICATION** | |
| CONTACT NAME: | Vance Summerhill |
| JOB TITLE: | Site Superintendent |
| PHONE NUMBER: | 410-848-4380 |
| EMAIL ADDRESS: | vsummerhill@westminstermd.gov |
| **DESCRIPTION OF EQUIPMENT OR PROCESS** | |
| Odor Treatment - Biotrickling Filter | |

Application is hereby made to the Department of the Environment for a Permit to Construct for the following equipment or process as required by the State of Maryland Air Quality Regulation, COMAR 26.11.02.09.

Check each item that you have submitted as part of your application package.

☒ Application package cover letter describing the proposed project

☒ Complete application forms (Note the number of forms included or NA if not applicable.)

No. 2 Form 5
No. NA Form 5T
No. NA Form 5EP
No. 3 Form 6
No. NA Form 10
No. 1 Form 11
No. NA Form 41
No. NA Form 42
No. NA Form 44

☒ Vendor/manufacturer specifications/guarantees

☒ Evidence of Workman's Compensation Insurance

☒ Process flow diagrams with emission points

☒ Site plan including the location of the proposed source and property boundary

☒ Material balance data and all emissions calculations

☒ Material Safety Data Sheets (MSDS) or equivalent information for materials processed and manufactured.

☐ Certificate of Public Convenience and Necessity (CPCN) waiver documentation from the Public Service Commission (1)

☐ Documentation that the proposed installation complies with local zoning and land use requirements (2)

(1) Required for emergency and non-emergency generators installed on or after October 1, 2001 and rated at 2001 kW or more.

(2) Required for applications subject to Expanded Public Participation Requirements.

# MARYLAND DEPARTMENT OF THE ENVIRONMENT

1800 Washington Blvd ▪ Baltimore, Maryland 21230
(410) 537-3230 ▪ 1-800-633-6101 ▪ www.mde.state.md.us

**Air and Radiation Management Administration ▪ Air Quality Permits Program**

## APPLICATION FOR PERMIT TO CONSTRUCT
### GAS CLEANING OR EMISSION CONTROL EQUIPMENT

**1. Owner of Installation** | **Telephone No.** | **Date of Application**
City of Westminster | 410-848-900

**2. Mailing Address** | **City** | **Zip Code** | **County**
45 W Main Street Suite 1 | Westminster | 21157 | Carroll

**3. Equipment Location** | **City/Town or P.O.** | **County**
1161 Old New Windsor Pike | Westminster | Carroll

**4. Signature of Owner or Operator** | **Title** | **Print or Type Name**
Vance Summerhill | Site Superintendent | Vance Summerhill

**5. Application Type:** **Alteration** ☐ **New Construction** [x]

**6. Date Construction is to Start:** 01/04/2022 **Completion Date (Estimate):** 01/07/2022

**7. Type of Gas Cleaning or Emission Control Equipment:**

**Simple Cyclone** ☐ **Multiple Cyclone** ☐ **Afterburner** ☐ **Electrostatic Precipitator** ☐

**Scubber** ☐ _____ (type) **Other** [x] Trickling Biofilter (type)

**8. Gas Cleaning Equipment Manufacturer** | **Model No.** | **Collection Efficiency (Design Criteria)**
Bioair Ecopure EP8162 Odor Control System

**9. Type of Equipment which Control Equipment is to Service:**
Belt filter press room and biosolids dryer exhaust (after gas is treated with cyclone dust collector)

**10. Stack Test to be Conducted:**

**Yes** ☐ **No** ☐ _____ (Stack Test to be Conducted By) _____ (Date)

**11. Cost of Equipment** $372,600

**Estimated Erection Cost** _____

## 12. The Following Shall Be Design Criteria:

| | INLET | | OUTLET | |
|---|---|---|---|---|
| Gas Flow Rate | 8,499 | ACFM* | 5,715 | ACFM* |
| Gas Temperature | 300 | °F | 85 | °F |
| Gas Pressure | | INCHES W.G. | 0.17 | INCHES W.G. |
| | PRESSURE DROP | | | |
| Dust Loading | | GRAINS/ACFD** | | GRAINS/ACFD** |
| Moisture Content OR | 10 | % | 4 | % |
| Wet Bulb Temperature | | °F | | °F |
| Liquid Flow Rate (Wet Scrubber) | 9.6 | GALLONS/MINUTE | | |

(WHEN SCRUBBER LIQUID OTHER THAN WATER INDICATE COMPOSITION OF SCRUBBING MEDIUM IN WEIGHT %)

*= ACTUAL CUBIC FEET PER MINUTE **= ACTUAL CUBIC FEET DRY

**WHEN APPLICATION INVOLVES THE REDUCTION OF GASEOUS POLLUTANTS, PROVIDE THE CONCENTRATION OF EACH POLLUTANT IN THE GAS STREAM IN VOLUME PERCENT. INCLUDE THE COMPOSITION OF THE GASES ENTERING THE CLEANING DEVICE AND THE COMPOSITION OF EXHAUSTED GASES BEING DISCHARGED INTO THE ATMOSPHERE. USE AVAILABLE SPACE IN ITEM 15 ON PAGE 3.**

## 13. Particle Size Analysis

| Size of Dust Particles Entering Cleaning Unit | % of Total Dust | % to be Collected |
|---|---|---|
| 0 to 10 Microns | | |
| 10 to 44 Microns | | |
| Larger than 44 Microns | | |

## 14. For Afterburner Construction Only:

Volume of Contaminated Air _____ CFM (DO NOT INCLUDE COMBUSTION AIR)

Gas Inlet Temperature _____ °F

Capacity of Afterburner _____ BTU/HR

Diameter (or area) of Afterburner Throat_____

Combustion Chamber_____ _____ Operating Temperature at Afterburner _____ °F
(diameter) (length)

Retention Time of Gases _____

**15. Show Location of Dust Cleaning Equipment in the System. Draw or Sketch Flow Diagram Showing Emission Path from Source to Exhaust Point to Atmosphere.**

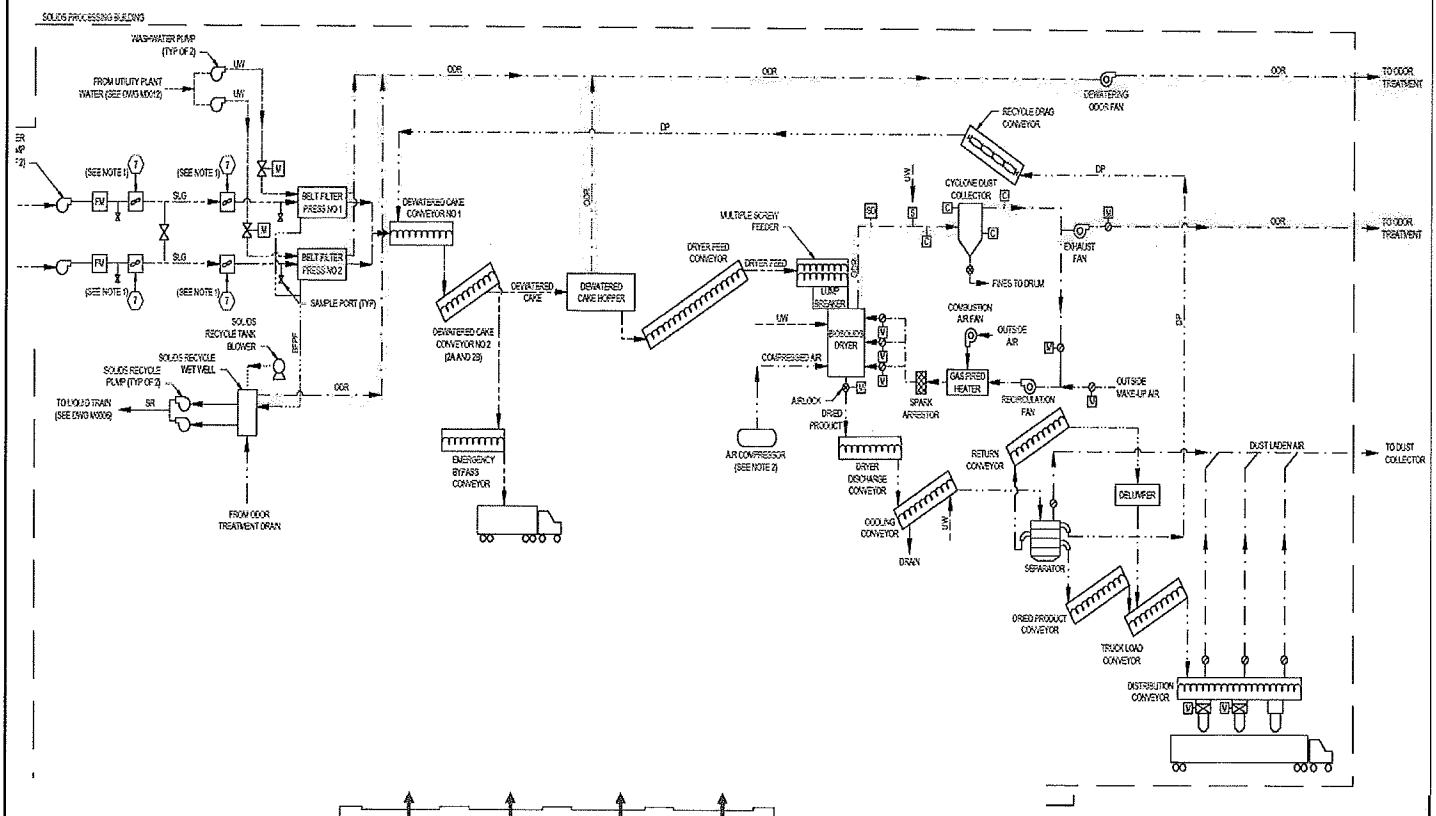


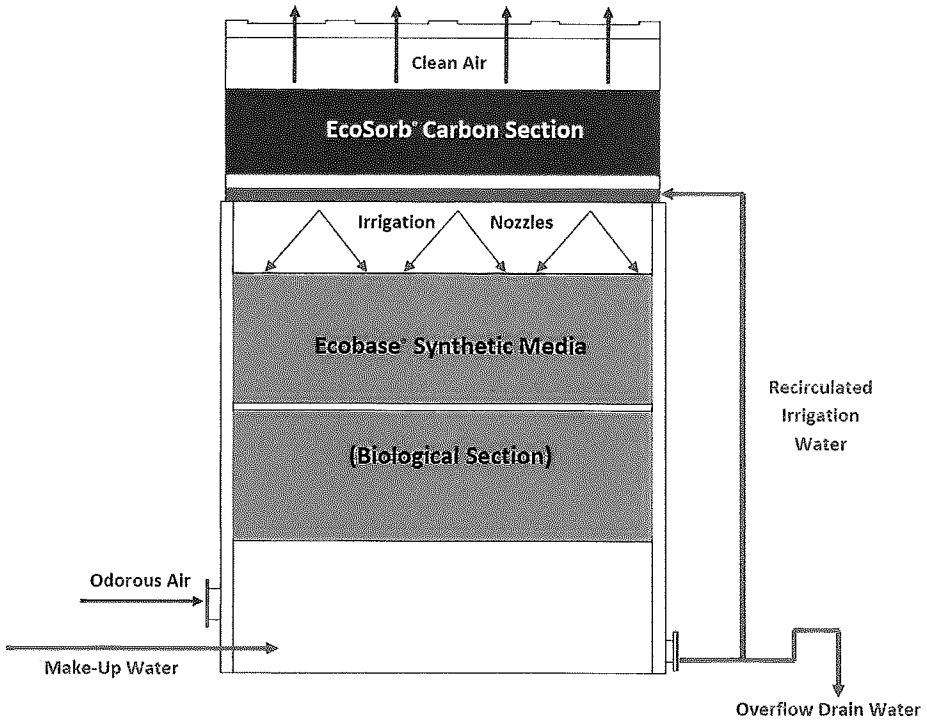

Date Received: Local _____ State _____

Acknowledgement Date: _____

By _____

Reviewed By:

Local _____

State _____

Returned to Local:

Date_____

By _____

Application Returned to Applicant:

Date_____

By _____

REGISTRATION NUMBER OF ASSOCIATED EQUIPMENT: ☐ ☐☐☐☐

PREMISES NUMBER: ☐☐ ☐☐☐☐

Emission Calculations Revised By _____ Date _____

Wyssmont® Company, Inc

FOR

Wyse™

# TURBO-DRYER®

**Per Section 11400**

**CLIENT: SHERWOOD-LOGAN EQUIPMENT LLC**
**USER: CITY OF WESTMINSTER WWTP**

**WYSSMONT REFERENCE No: (J567) WST-W13016**

WYSSMONT COMPANY, INC.

1470 BERGEN BOULEVARD
FORT LEE, NJ 07024

TEL: (201) 947-4600
FAX: (201) 947-0324
www.wyssmont.com

# DESCRIPTION OF TURBO-DRYER PROCESS FUNCTION

Page # of PDF document


3. Turbo-Dryer design
4. Turbo-Dryer product flow schematics
5. Turbo-Dryer airflow schematics
6. Heating system description
7. Control system description
8. Operating considerations
10. General operating notes
12. Turbo-dryer system flow calculation chart
13. Sectional assembly of Turbo-dryer
14. Figure A – typical Dryer shelf design
15. Figure B – typical tray segment design
16. Figure C – typical wiper design
17. Figure D – Turbo-fan assembly
18. Dryer Top bearing
19. Dryer Bottom bearing
20. Dryer Drives

## A. TURBO-DRYER DESIGN

The TURBO-DRYER is a continuous Dryer with two moving parts in the interior - the Tray/Shelf Rotating Structure Assembly and the TURBO-Fan Assembly.
The TURBO-DRYER requires minimal operator attention as the operation and control are simplified, and the Dryer is self-compensating for feed rate and moisture changes.
The TURBO-DRYER has low maintenance costs and gives long uninterrupted production runs.

Tray/Shelf Assembly consists of a specific number of shelves in accordance with the size of the Dryer – J567 has 32 shelves. The shelves are rigidly mounted on an inner supporting frame to form a vertical stack, which rotates slowly as a unit.
Each shelf is circular with an open center and evenly spaced radial slots - see Figure A.
Individual Tray segments (see Figure B) are resting on Inner and Outer tray rings, being bolted to the Outer ring. Tray clips are installed in slots to direct process material being transferred away from the rings and minimize chance of spilling outside of the rings.

Feed material is continuously introduced through a Feed chute in the roof of the TURBO-DRYER housing and comes to rest on the top shelf. The rotation of the shelf carries the feed material nearly one full revolution. It then meets a stationary wiper assembly (see Figure C) with a blade set to wipe the tray clean of material. The wiper blade holds the material stationary while the shelf continues to rotate. When a slot in the shelf moves under the stationary material, the material is transferred to the shelf below. The entire cycle is then repeated.

Material progresses downward from shelf to shelf through the Dryer and is discharged through a chute in the housing bottom.

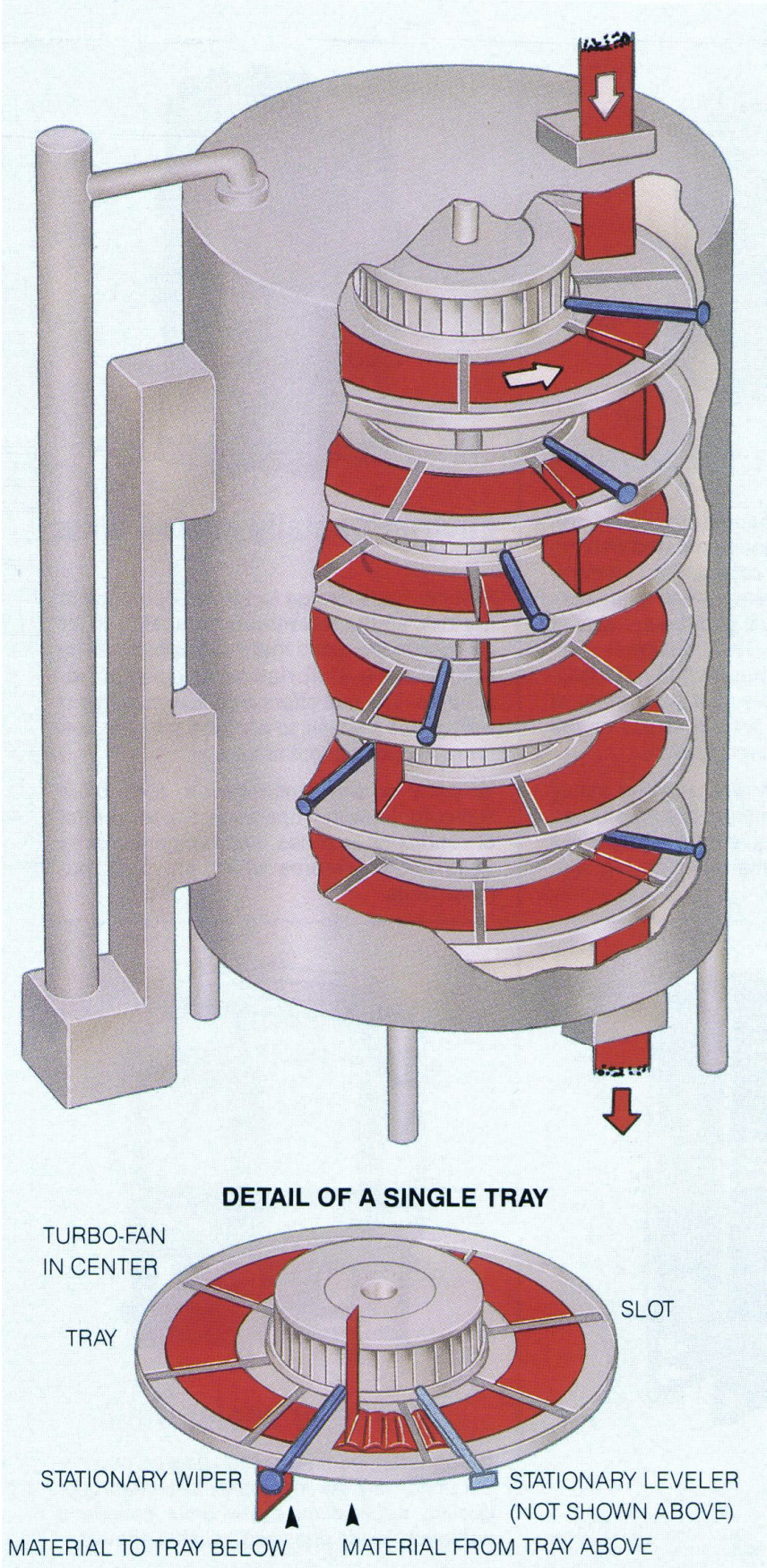


TURBO-DRYER PRODUCT FLOW SCHEMATICS

The Fan Assembly is located in the open space in the center of the trays. It consists of several fan wheels mounted on a central shaft- see Figure D. The Fan Assembly rotates independently of the Tray/Shelf Assembly, in the same direction - counterclockwise if viewed from above, or left to right if viewed from outside of the dryer.

The Turbo-Fan is circulating air inside the housing of the Turbo-Dryer - this fan assures that incoming hot gas is mixed with internal gas to prevent any hot spots, and maintain the same temperature of gas on each horizontal level. It also moves the gas above material resting on the trays promoting drying or heat exchange.

Both Tray/Shelf Assembly and The Turbo-Fan Assembly are rotating by the drives located outside of the Dryer housing, through the sealed penetration in the Dryer Bottom. The assemblies' vertical position is supported by the Top bearing located on the Roof of the dryer. See Dryer Vertical assembly, Bottom Bearing and Top bearing drawings on following pages

Drying is accomplished by passing heated air over the wet material as it makes its way through the Dryer.

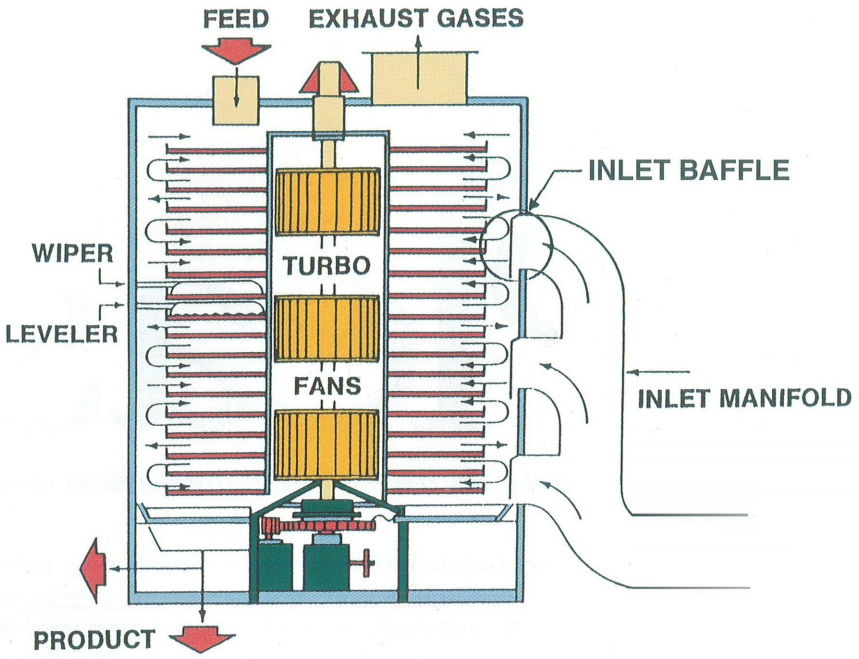


TURBO-DRYER AIRFLOW SCHEMATICS

## HEATING SYSTEM DESCRIPTION

The purpose of the heating system is to provide air to the TURBO-DRYER at a constant mass flow rate, carrying sufficient heat to maintain the desired Dryer temperature. A system of controlled dampers is used to maintain the required mass flow to the Dryer.
The Dryer manifold is equipped with dampers adjusted individually for distribution of heat in the dryer.
The Recirculation and Fresh air makeup dampers are adjustable for the total air flow balance

The drying medium from an external heating system enters the Dryer through a side mounted vertical manifold with control dampers. The TURBO-Fan assembly causes the incoming drying medium to be circulated over the shelves before it exits through an exhaust stack in the roof of the Dryer.

The drying medium is supplied by the Recirculation Fan and is ducted through a Natural Gas Heater to the TURBO-DRYER inlet manifold. The heater output is automatically controlled to add the heat required to maintain the desired temperature in the Dryer.

## CONTROL SYSTEM DESCRIPTION

### Dryer Temperature

A temperature sensor located near the top of the Dryer is used as the input for a control loop, which maintains the desired temperature in the top portion of the Dryer by modulating the heater output. This alters the temperature of the drying medium and therefore, the heat input into the Dryer. Increasing the load in the top of the Dryer results in a higher inlet manifold temperature in order to maintain a constant Dryer temperature. The temperature differential between the Dryer and the inlet manifold is a reflection of the internal heat load in the Dryer.

A temperature sensor located near the bottom of the Dryer is used as the input for a control loop which maintains the desired temperature in the bottom portion of the Dryer by modulating the bottom inlet damper. When the Dryer bottom temperature goes below its set point the bottom damper opens. This affects the vertical distribution of the incoming hot air. Increasing load in the bottom of the Dryer opens the damper to allow more of the hot air into the bottom of the Dryer. The resultant decrease in flow, and therefore heat, to the top of the Dryer will cause the top temperature controller to increase the Heater output as necessary to maintain the top temperature.

Temperature sensors installed on (3) of the lower dryer shelves are in intermittent contact with material on the tray segment being wiped by stationary wipers. The temperature measurements will monitor actual temperature of process material and compliance with product specifications

The optimum drying rate will usually be obtained at the highest Dryer temperatures that the material can tolerate without adverse effects as long as this is below the mechanical design temperature rating of the Dryer.

## OPERATING CONSIDERATIONS

Any changes in the operating conditions will not be instantly reflected in the product. After the system has stabilized at the new conditions, a period of time at least equal to the retention time must pass before the product will be representative of the new conditions.

### Retention Time and Tray Loading

The time it takes for the material to pass through the TURBO-DRYER is determined by the rotational speed of the shelves. Reducing the speed increases the retention time and, to a point, reduces product moisture.

Increasing the retention time decreases volumetric throughput because the volume of material that will be conveyed in a given time by a given shelf area with a constant layer depth will vary proportionally with the speed at which the shelves move. This fact, along with an understanding of the way the material flows through the TURBO-DRYER, defines the relationship between feed rate, retention time and tray loading.

The volume of material that is initially loaded on each tray segment of the top shelf is determined by the feed rate and the speed of the shelves. At a constant shelf speed, increasing the feed rate will increase the tray loading. If the feed rate is held constant, slowing the shelf rotation will increase loading.

When material is transferred from one shelf to the next, the plug of material that is on one tray segment of a shelf is dropped onto a single tray segment of the shelf below.

If the volume of material on the Tray Segment is less than the maximum that the Tray can hold, an empty area is left at the edges of the Segment. If the volume of the material exceeds the capacity of the Tray Segment, the excess material would spill into the slots and will fall to the next shelf below. In this way, the excess material is transferred immediately instead of remaining on the Shelf for the time required to complete nearly a full revolution. This short-circuiting will result in under-processed product (with higher moisture) than would otherwise be the case.

From the previous paragraphs, it should be clear that the feed rate must be coordinated with the retention time. If the Dryer is being run with partially loaded trays, increasing retention time will result in lower final moisture until the point is reached where the trays are overloaded and short-circuiting begins. At that point, final moisture will increase with further increases in retention time unless the feed rate is reduced or the layer depth is increased to eliminate the short-circuiting. From a volumetric standpoint, the TURBO-DRYER is at maximum capacity when the trays are fully loaded at the maximum layer depth and the minimum retention time that will yield the desired product moisture.

**TURBO-Fan Speed**

Increasing the TURBO-Fan speed will increase the drying rate. The practical upper limit for the speed is the point at which dust carried over from the Dryer Shelves becomes unacceptable. Dust entrainment due to excessive TURBO-Fan speed can often be observed as a plume coming off of the material as it is being transferred from one shelf to the next.

**EVERY OPERATOR SHOULD FOLLOW ALL PLANT SAFETY PROCEDURES**

## GENERAL OPERATING NOTES

1. The capacity of this Dryer depends on the total drying medium flow, drying temperature, and air velocity over the trays. If material is spread evenly over the trays and the maximum permissible temperature and velocity over the tray is reached, the evaporation (or other required chemical processing) rate is at its maximum.
2. If the moisture in the feed is higher for the specified feed rate or the feed rate at the design moisture is increased, both of which would require higher evaporation rates, the product will discharge wet.
3. Slowing the rotation of the trays alone does not lengthen total material retention time if feed rate remains constant. Tray speed being too slow will cause material to short circuit every second tray as is shown in Figure "C". This results in wet product.
   A corresponding decrease in feed rate or an increase in layer thickness by raising the levelers is necessary. Feed rate is at a maximum if the trays on the third shelf (counting from the top of the Dryer) are as shown in Fig. B.

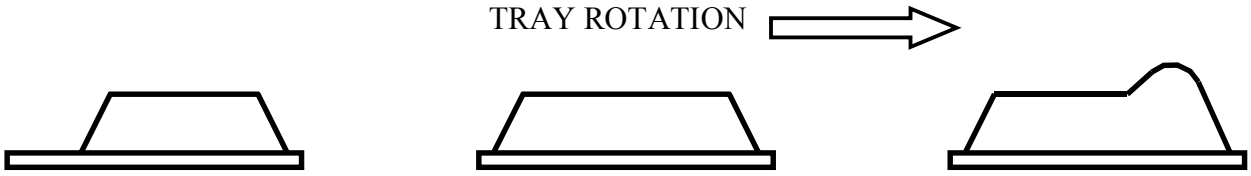


Fig. A Partially Loaded  Fig. B Fully Loaded  Fig. C Overloaded

**DANGER**

TURBO-DRYER® IS OPERATING AT HIGH TEMPERATURE
DO NOT REACH IN THE DRYER DURING OPERATION
TURBO-DRYER RETAINS HEAT FOR EXTENDED PERIOD
AFTER PROCESS SHUTDOWN

4. For highest efficiency, a Dryer should be operated 24 hours per day. If the TURBO-DRYER is to be shut down daily, it is not necessary to empty the Dryer unless the material will set or cake at room temperature. It is advisable to set the trays to the lowest speed at shutdown to permit restarting the TURBO-DRYER without tripping the clutch. Shut off heat first and after a few minutes, stop TURBO-Fan and Tray Drives.
   As with any other piece of equipment, it will take a little time before the operator is able to get the best results. However, familiarizing himself with the foregoing instructions and the operating data will greatly reduce this period of time.

5. Dryer is designed and equipped with components suitable for Plant environment.
   Proper maintenance and housekeeping will help to assure reliable operation.
   Do not allow accumulation of foreign material on drive components.
   Attend to damaged components or parts immediately.

6. Do not operate with guards removed

## Ref: W13016A, Date: 12-08-2017, Time: 09:22:34

| | |
|---|---|
| Feed Rate | 4,100. LB/HR |
| Product Rate | 820. LB/HR |
| Evaporation | 3,280. LB/HR Water |
| Recycle Ratio M4/M6 | 0.800 |
| Internal Heat Load | 3,940,000. BTU/HR |
| Fuel | Natural Gas with Carbon Concentration = .76 |
| HHV | 22,800. BTU/LB |
| LHV | 20,532. BTU/LB |
| Excess Air | 0.0 % |
| Burner Firing Rate | 5,007,949. BTU/HR |
| Fuel Flow Rate | 220. LB/HR |
| Plant Elevation | 100. FASL |
| Atmospheric Press. | 14.6 PSIA |

| **STREAM** | **1** | **2** | **3** | **4** | **5** | **6** | **7** |
|---|---|---|---|---|---|---|---|
| Mass Flow (LB/HR) | 8,176. | 44,865. | 48,145. | 32,702. | 15,443. | 40,878. | 3,987. |
| Temperature (DEG F) | 70. | 550. | 250. | 250. | 250. | 219. | 4,142. |
| Volume Flow (ACFM) | 1,843. | 21,261. | 16,526. | 11,225. | 5,301. | 13,100. | 8,115. |
| Specific Heat (BTU/LB-DEG F) | .252 | .293 | .305 | .305 | .305 | .294 | .278 |
| Specific Weight (LB/FT3) | .0739 | .0352 | .0486 | .0486 | .0486 | .0520 | .0082 |
| Sp. Humidity (LB/LB) | 0.008 | 0.241 | 0.332 | 0.332 | 0.332 | 0.251 | 0.145 |
| Rel. Humidity (%) | 50.0 | 0.4 | 17.2 | 17.2 | 17.2 | 25.0 | 0.1 |
| **Weight. Conc. (LB/LB)** | | | | | | | |
| CO2 | .000 | .043 | .040 | .040 | .040 | .032 | .154 |
| H20 | .008 | .194 | .249 | .249 | .249 | .201 | .126 |
| N2 | .761 | .632 | .589 | .589 | .589 | .623 | .720 |
| O2 | .231 | .131 | .122 | .122 | .122 | .144 | .000 |

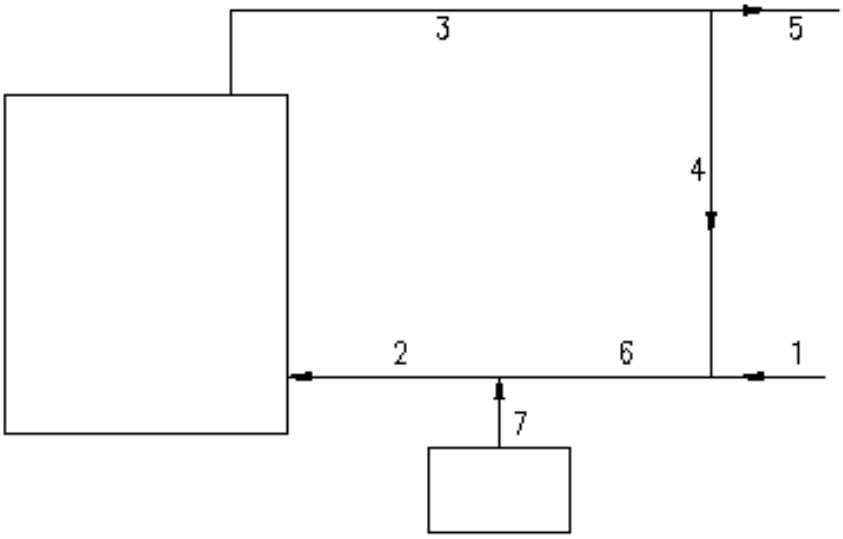

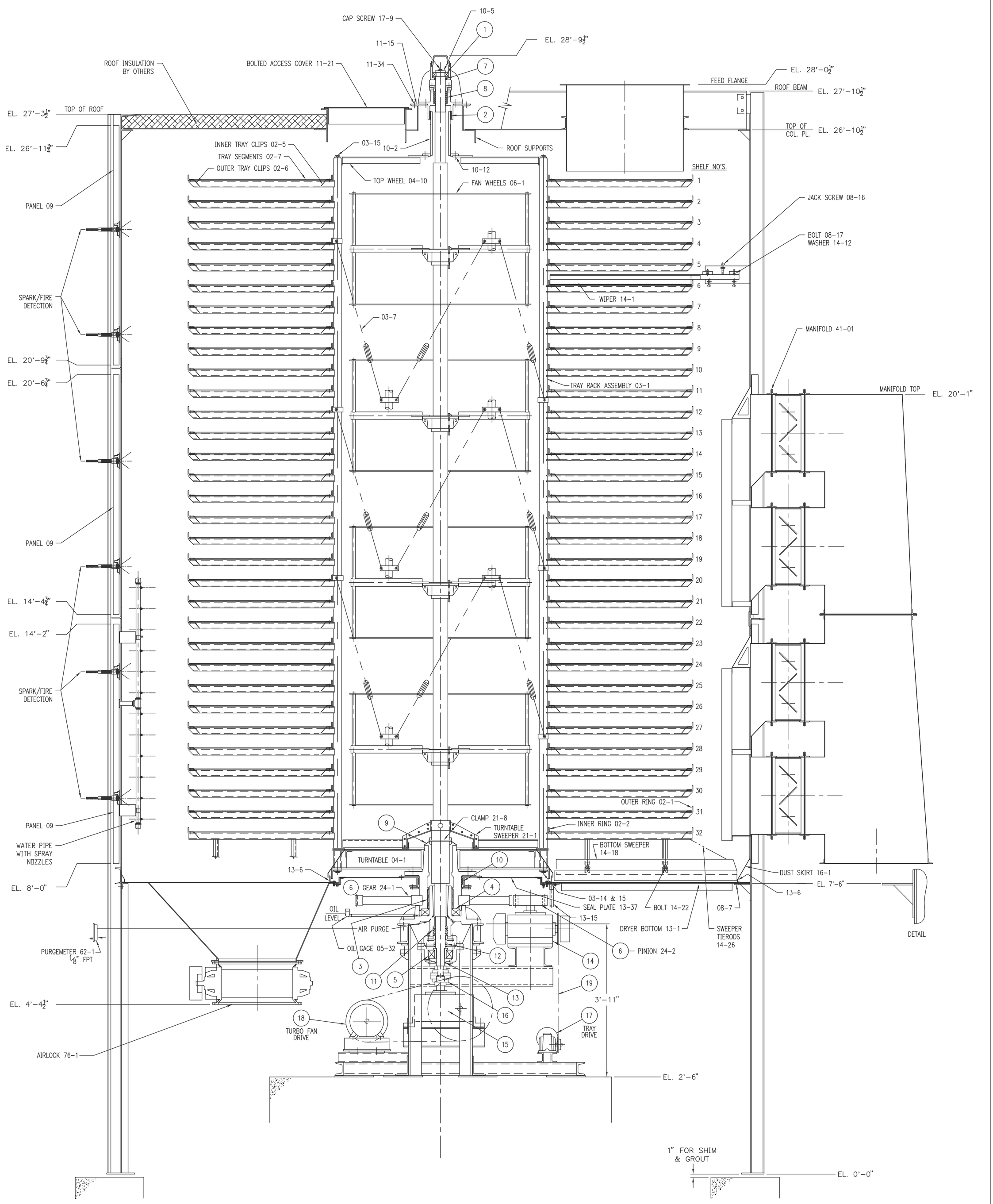


| LUBRICATION SCHEDULE | | | | | |
|---|---|---|---|---|---|
| COMPONENT | LOCATION | FREQUENCY | METHOD | LUBRICANT | PT.NO. |
| BALL BRG. | 1 | MONTHLY | FITTING | EP ET GREASE | 10-7 |
| BUSHING | 2 | SELF LUBRICATING | | | 10-6 |
| BUSHING | 3 | SELF LUBRICATING | | | 05-13 |
| THRUST BRG. | 4 | DAILY | C.L. OILER | SAE 90 | 05-8 |
| ROLLER BRG. | 5 | WEEKLY | FITTING | EP ET GREASE | 05-9 |
| GEAR & PINION | 6 | WEEKLY | MANUALLY | HVY.GEAR GREASE | 24-1,2 |
| REDUCER | 14 | SEE MANUFACTURERS INSTRUCTIONS | | | 01-9 |
| REDUCER | 15 | SEE MANUFACTURERS INSTRUCTIONS | | | 01-22 |
| COUPLING | 16 | SEE MANUFACTURERS INSTRUCTIONS | | | 01-23 |
| TRAY DRIVE | 17 | SEE MANUFACTURERS INSTRUCTIONS | | | 01-1 |
| TURBO FAN DRIVE | 18 | SEE MANUFACTURERS INSTRUCTIONS | | | 01-14 |
| CHAIN | 19 | DAILY | MANUALLY | HVY.GEAR GREASE | 01-8 |

| PACKING & SEALS | | |
|---|---|---|
| TYPE | LOCATION | PT. NO. |
| SEAL | 7 | 10-16 |
| PACKING | 8 | 10-15 |
| SEAL | 9 | 21-20 |
| PACKING | 10 | 05-35 |
| PACKING | 11 | 05-36 |
| SEAL | 12 | 05-42 |
| SEAL | 13 | 05-15 |

| REV. | BY | DATE | DESCRIPTION | APP'VD. |
|---|---|---|---|---|

SECTIONAL ASSEMBLY

WYSSMONT COMPANY, Inc.

FORT LEE, NEW JERSEY

WYSSMONT REF. No: (J567) WST-W13016

This drawing is the property of WYSSMONT CO. INC. and is not to be reproduced or used to furnish any information for making of drawings or apparatus except where provided for by agreement with said company.

S:\R12_DWGS\FLD\00\SAQ32\500-1.DWG

| | | |
|---|---|---|
| SCALE: ¾" = 1'-0" | REV. | DRAWN BY: AZ 1/10/19 |
| DWG. NO. SAQ32-500-1 | – | CHECKED BY: VG |
| | | APPV'D. BY: |

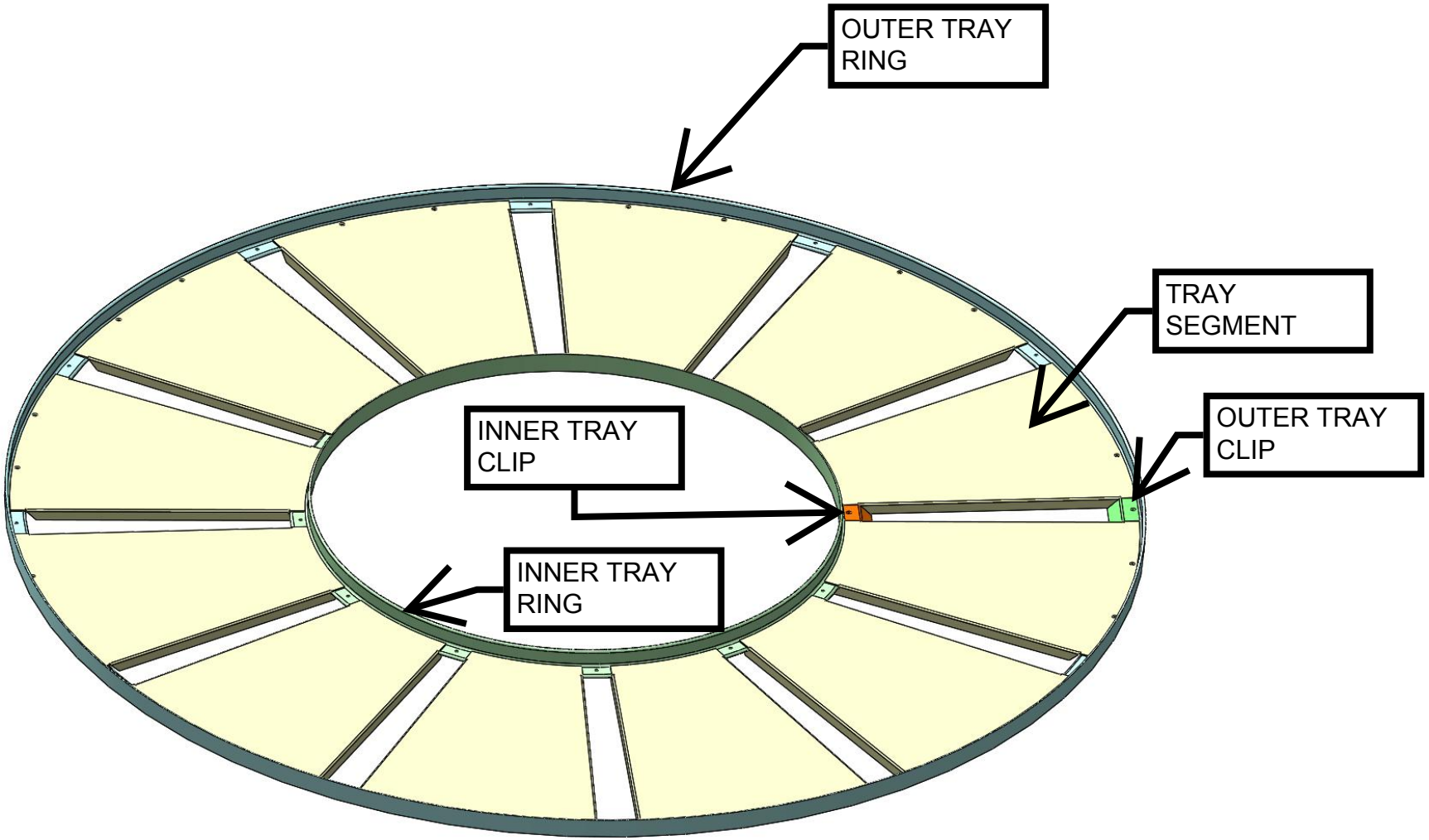


**FIGURE A**

TYPICAL
DRYER SHELF
DESIGN

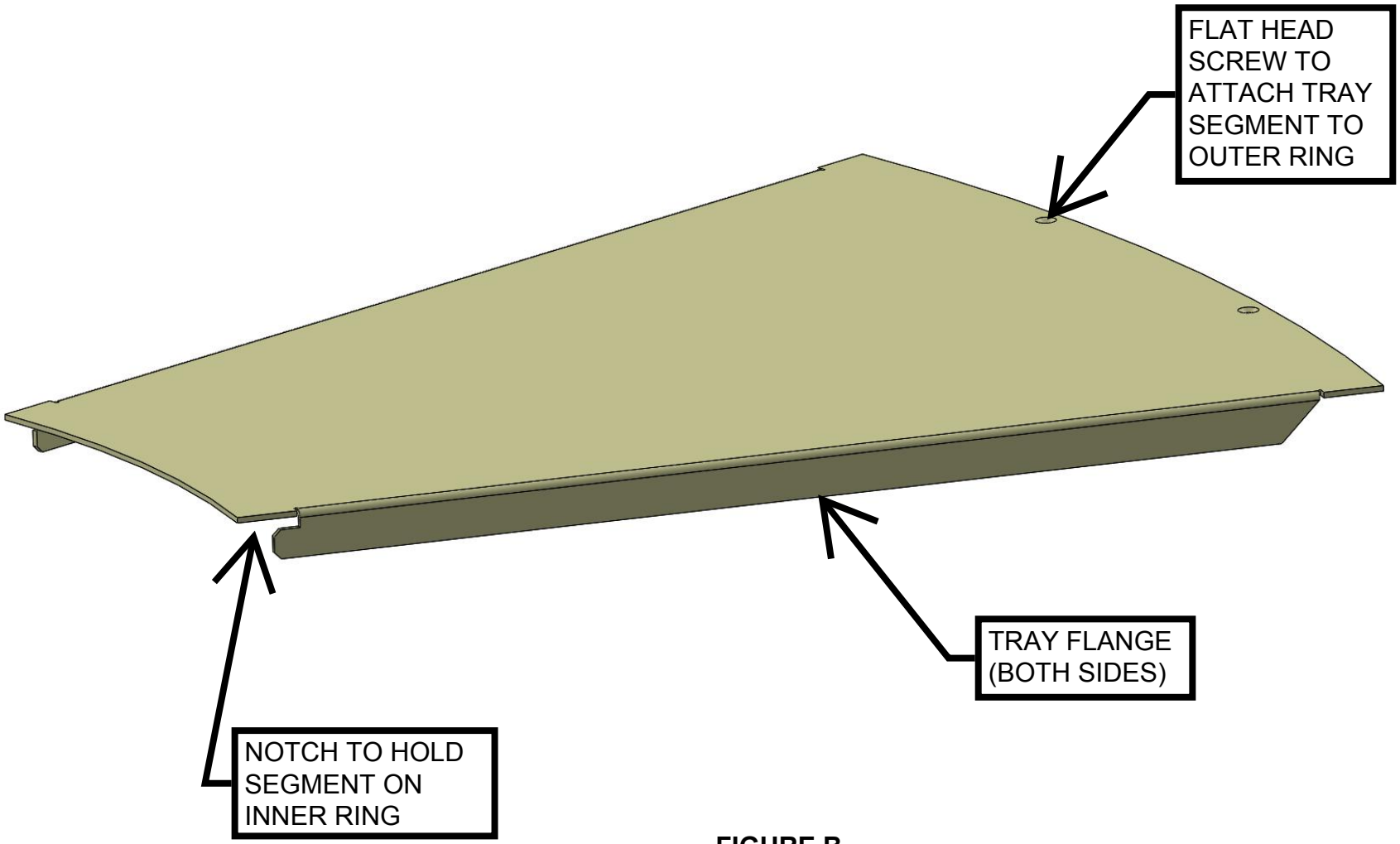


**FIGURE B**

TYPICAL TRAY SEGMENT DESIGN

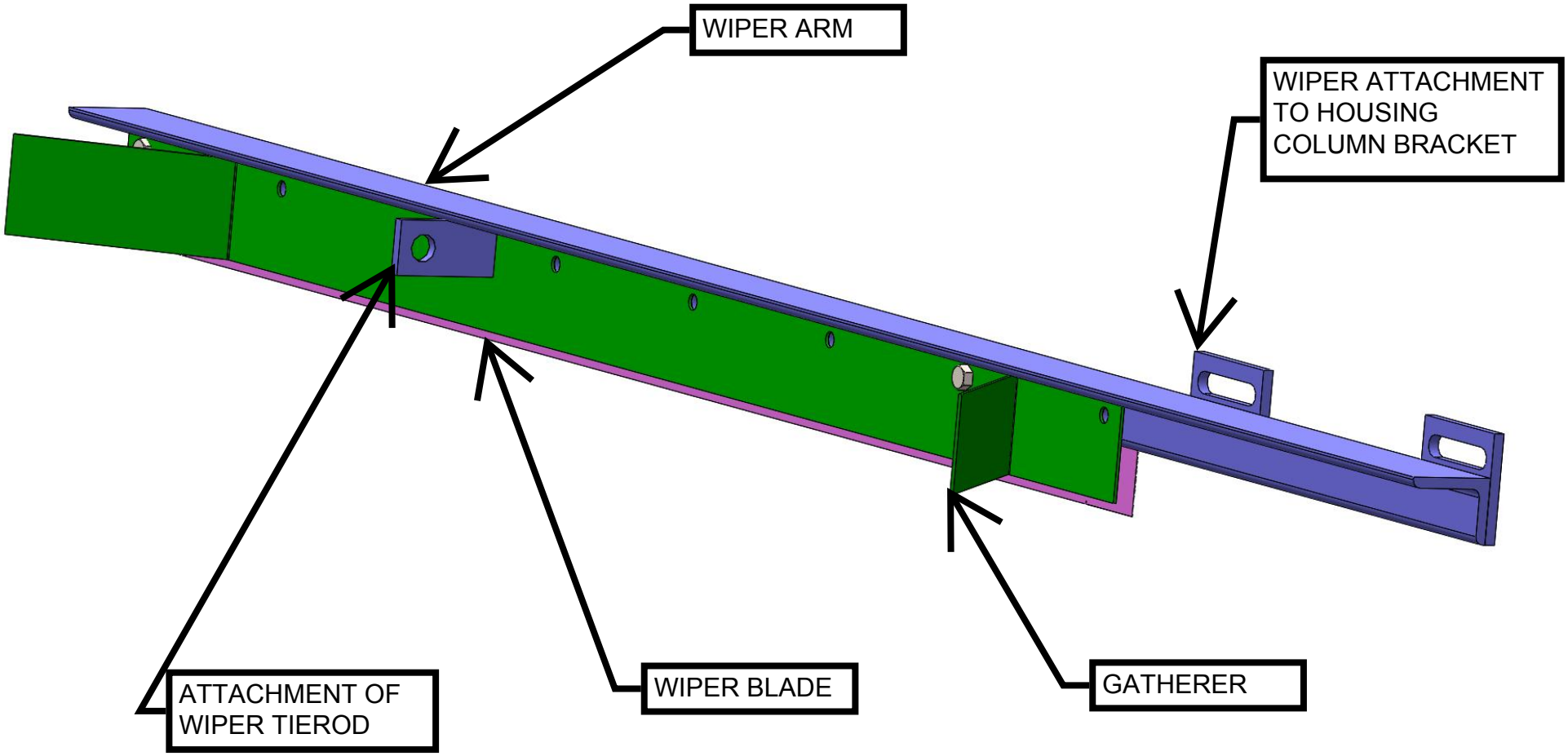


**FIGURE C**

TYPICAL WIPER DESIGN

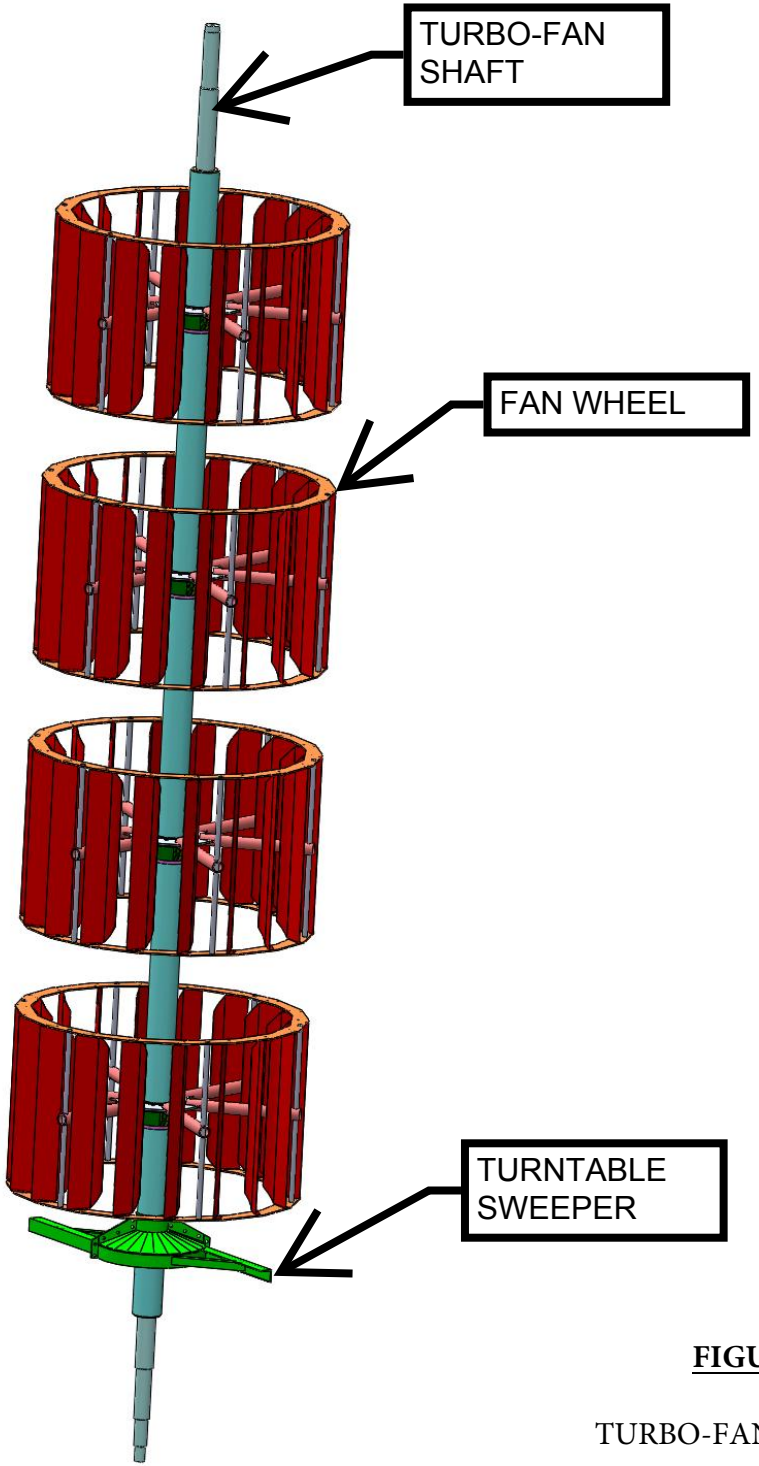


**FIGURE D**

TURBO-FAN ASSEMBLY

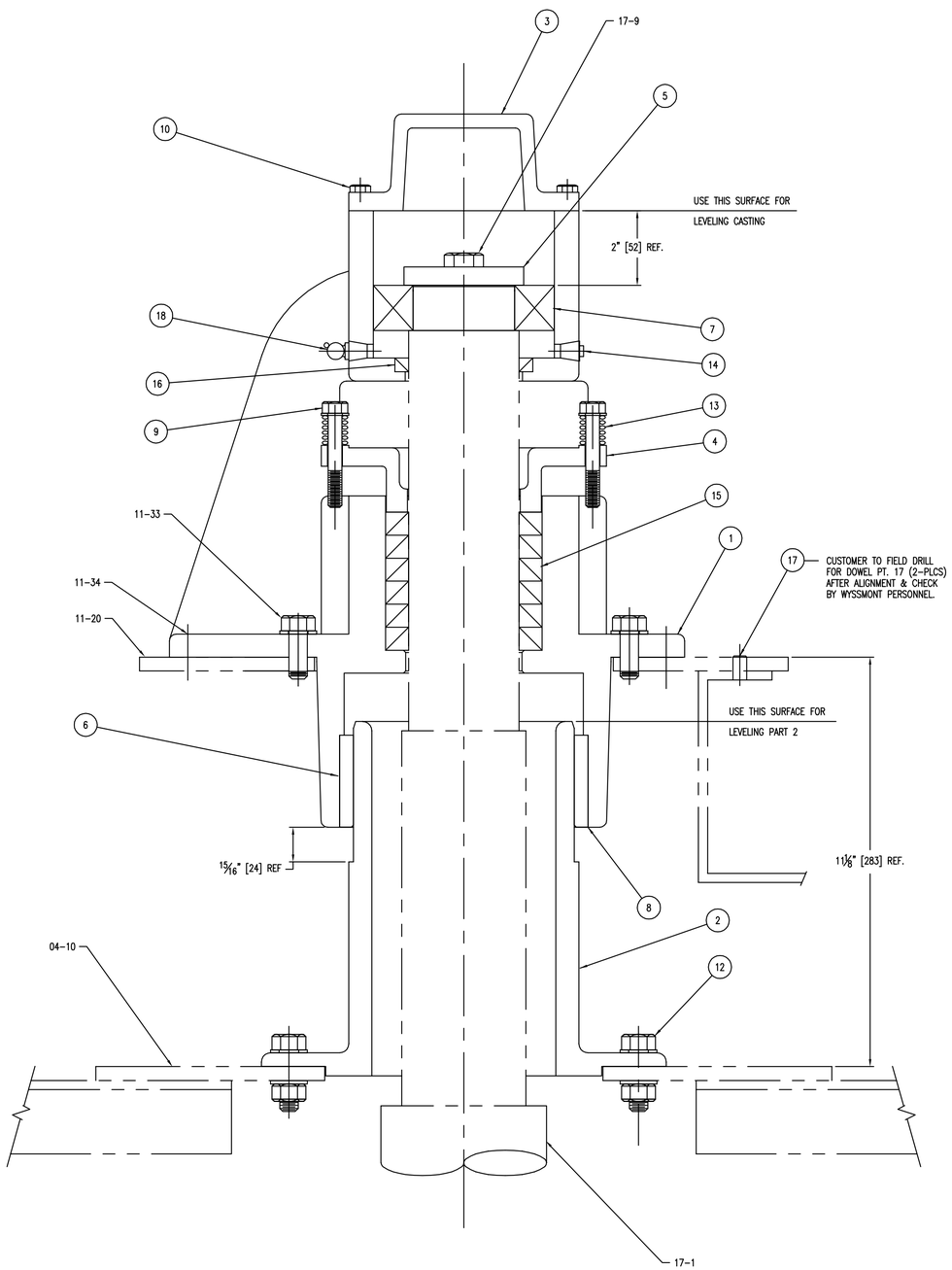


LIST OF MATERIAL

| | NO. | DESCRIPTION | REQ'D | REMARKS |
|---|---|---|---|---|
| | 1 | CASTING-PATTERN OPQ-W210-1 | 1 | ST ST 304L |
| | 2 | TOP BEARING TRUNNION | 1 | OS-W210-2A |
| | 3 | CASTING SEE OSW210-3 | 1 | XP-010146 |
| | 4 | CASTING SEE OSW210-4 | 1 | XP-010186 |
| | 5 | ROUND 3/4 DIA. 1/2 LG. | 1 | CRS XP-010187 |
| * | 6 | BUSHING | 1 | |
| | 7 | BALL BEARING | 1 | |
| ○ | 8 | SET SCREW 1/4 X 1/2 LG | 2 | STN STL ALLEN HD PT. 1 TO 6 |
| ○ | 9 | CAP SCREW 3/8 X 2 1/2 LG | 2 | STEEL W/WASHER PT. 1 TO 4 |
| ○ | 10 | CAP SCREW 5/16 X 1 LG | 4 | STEEL PT. 1 TO 3 |
| | | | | |
| ○ | 12 | CAP SCREW 1/2 X 2 LG | 4 | STEEL PT. 1 TO 15 |
| ○ | 13 | DIE SPRING | 2 | |
| ○ | 14 | PIPE PLUG 1/4 STD | 1 | IRON FOR PT. 1 |
| * | 15 | BRAIDED PACKING | 1 | |
| | 16 | SEAL | 1 | |
| ○ | 17 | DOWEL PIN 3/8 DIA X 1"LG | 2 | STN STL |
| ○ | 18 | HYDRAULIC GREASE FITTING | 1 | ALEMITE 1/4 PIPE #1629 |
| | | | | |
| | | | | |
| | 24 | PLASTILUBE | 1 PINT | |
| | | | | |

* RECOMMENDED SPARE PARTS
○ STANDARD HARDWARE ITEMS

| REV. | BY | DATE | DESCRIPTION | APP'VD. |
|---|---|---|---|---|
| B | AJS | 6/6/96 | REDRAWN | |

TOP BEARING

WYSSMONT™ COMPANY, Inc.
FORT LEE, NEW JERSEY

This drawing is the property of WYSSMONT CO. INC. and is not to be reproduced or used to furnish any information for making of drawings or apparatus except where provided for by agreement with said company.

| | | |
|---|---|---|
| SCALE: 6"=1'-0" | REV. | DRAWN BY: AJS 6/5/96 |
| DWG. NO. 0-S-210 | B | CHECKED BY: |
| | | APPV'D. BY: |

S:\R12_DWGS\

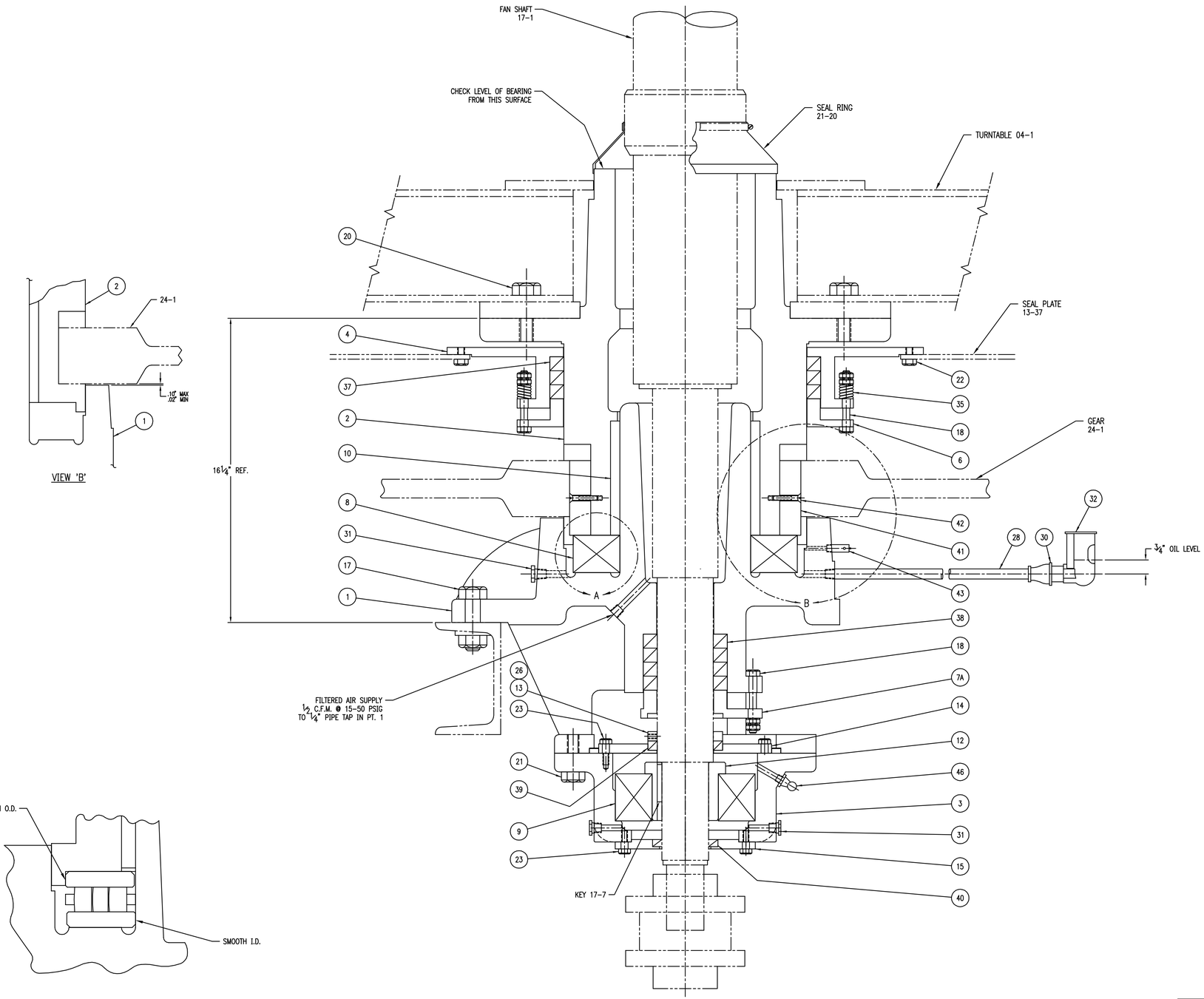


NOTE:
WHEN REASSEMBLING BEARING KEEP NUMBERS ON TOP & BOTTOM WASHERS FACED AWAY FROM ROLLERS – (TOP WASHER – SMOOTH O.D.)
(BOTTOM WASHER – SMOOTH I.D.)

LIST OF MATERIAL

| NO. | NAME & STOCK | REQ'D | MATERIAL & REMARKS |
|---|---|---|---|
| 1 | CASTING | 1 | |
| 2 | CASTING | 1 | |
| 3 | CASTING | 1 | |
| 4 | CASTING | 1 | |
| 5 | | | |
| 6 | CASTING | 1 | |
| 7A | CASTING | 1 | |
| 8 | THRUST BEARING | 1 | |
| 9 | SPHERICAL ROLLER BRG | 1 | |
| 10 | BUSHING | 1 | |
| 11 | | | |
| 12 | BEARING ADAPTER | 1 | |
| 13 | SEAL RING RETAINER | 1 | |
| 14 | BEARING COVER | 1 | |
| 15 | BEARING COVER | 1 | |
| 16 | | | |
| 17 | BOLT 3/4" x 2 1/2"LG. W/NUT & LW | 6 | |
| 18 | BOLT 3/8" x 3"LG. W/2 JAM NUTS | 6 | |
| 19 | | | |
| 20 | CAP SCR. 3/4"-10NC x 2"LG. | 6 | |
| 21 | CAP SCR. 5/8"-11NC x 2"LG. | 6 | |
| 22 | CAP SCR. 3/8"-16NC x 1/2"LG. | 12 | |
| 23 | CAP SCR. 5/16"-18NC x 1"LG. | 10 | |
| 24 | | | |
| 25 | | | |
| 26 | SOC HD SET SCR 1/4"-20 x 1/2"LG. | 2 | |
| 27 | | | |
| 28 | PIPE | 1 | |
| 29 | | | |
| 30 | REDUCER | 1 | |
| 31 | PIPE PLUG | 3 | |
| 32 | OIL GAGE W/SIGHT GLASS | 1 | |
| 33 | | | |
| 34 | | | |
| 35 | SPRING | 4 | |
| 36 | | | |
| 37 | PACKING | 3 | |
| 38 | PACKING | 4 | |
| 39 | SEAL RING | 1 | |
| 40 | SEAL RING | 1 | |
| 41 | KEY | 2 | |
| 42 | FL HD. CAP SCR. 1/4"-20 x 1 1/2"LG. | 2 | |
| 43 | BREATHER TUBE | 1 | |
| 44 | | | |
| 45 | | | |
| 46 | HY'D GREASE FITTING 1/8 NPT | 1 | |
| 47 | SOC. HD. SET SCR. 3/8"-16 x 3/4"LG. | 2 | |
| 48 | | | |
| 49 | | | |
| 50 | | | |

| REV. | BY | DATE | DESCRIPTION | APP'VD. |
|---|---|---|---|---|
| | | | | |

BOTTOM BEARING ASSEMBLY

WYSSMONT COMPANY, Inc.

FORT LEE, NEW JERSEY

This drawing is the property of WYSSMONT CO. INC. and is not to be reproduced or used to furnish any information for making of drawings or apparatus except where provided for by agreement with said company.

| SCALE: 4" & 6" = 1'-0" | REV. | DRAWN BY: AJS 1/16/98 |
|---|---|---|
| DWG. NO. SAQ-X105 | | CHECKED BY: |
| | | APPV'D. BY: |

S:\R12_DWGS\FLD\05\SAQ\X105.DWG

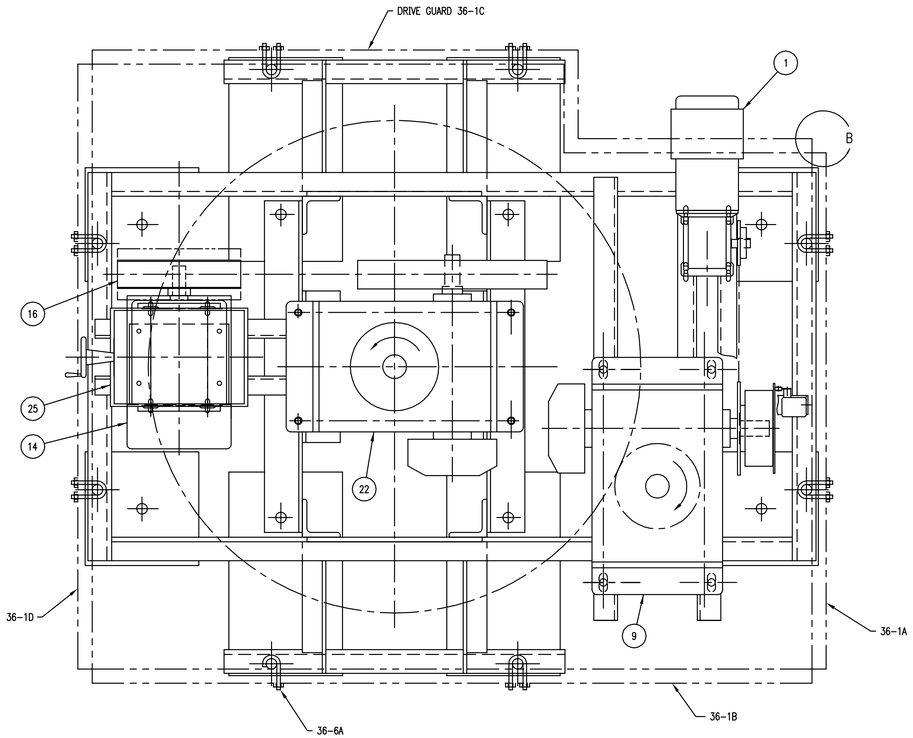


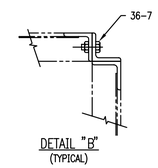


| LIST OF MATERIAL | | | |
|---|---|---|---|
| PART | DESCRIPTION | REQ'D. | MATERIAL & REMARKS |
| 1 | GEARMOTOR 1½ HP | 1 | TE |
| | | | |
| 6 | SPROCKET | 1 | |
| 7 | SPROCKET | 1 | MOUNTED ON PT. 10 |
| 8 | CHAIN | 1 | |
| 9 | WORM REDUCER (TRAY DRIVE) | 1 | |
| 10 | TORQUE LIMITING CLUTCH | 1 | |
| | | | |
| 13 | MICROSWITCH | 1 | |
| 14 | MOTOR 7½ HP | 1 | TE |
| | | | |
| 16 | SHEAVE | 1 | |
| 17 | BELT | 1 | |
| 18 | SHEAVE | 1 | |
| | | | |
| 22 | WORM REDUCER (FAN DRIVE) | 1 | |
| 23 | COUPLING | 1 | |
| | | | |
| 25 | MOTOR BASE | 1 | |
| | | | |
| 27 | BOLT ⅜"-16 | 4 | |
| | | | |
| | | | |
| | | | |

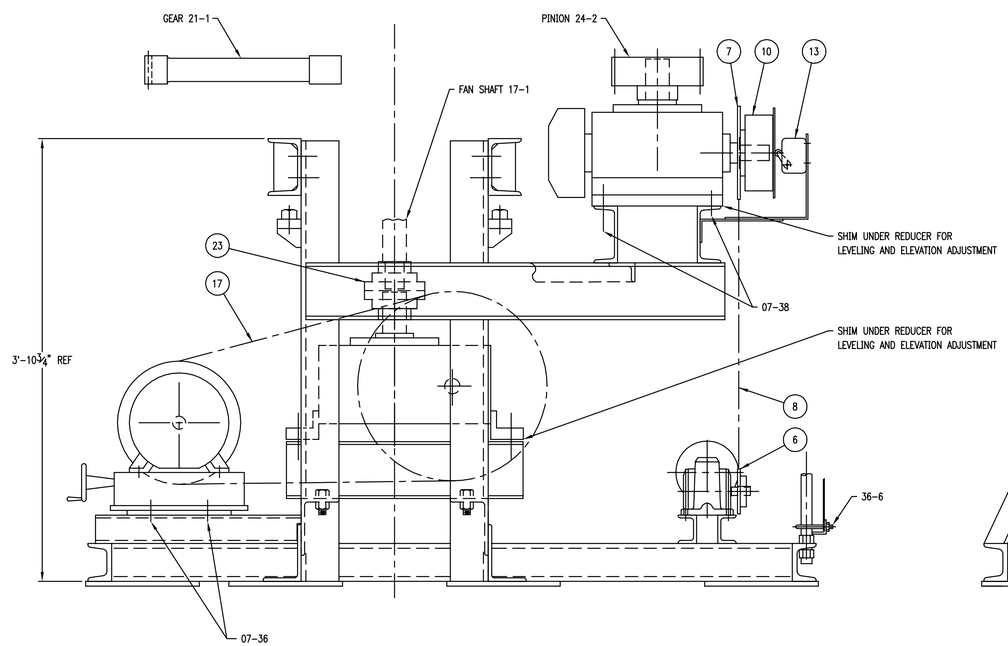


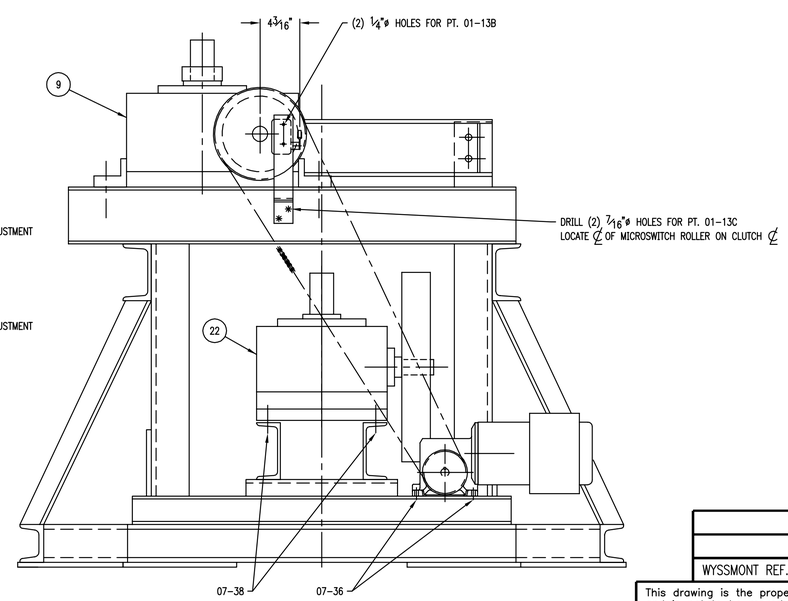


PRELIMINARY
DO NOT USE FOR CONSTRUCTION

| REV. | BY | DATE | DESCRIPTION | APP'VD. |
|---|---|---|---|---|
| | | | | |

DRIVE ARRANGEMENT

WYSSMONT COMPANY, Inc.

FORT LEE, NEW JERSEY

WYSSMONT REF. No: (J567) WST-W13016

This drawing is the property of WYSSMONT CO. INC. and is not to be reproduced or used to furnish any information for making of drawings or apparatus except where provided for by agreement with said company.

| | | |
|---|---|---|
| SCALE: 1½"=1'-0" | REV. | DRAWN BY: VG |
| DWG. NO. J567-001 | | CHECKED BY: |
| | | APPV'D. BY: |

S:\R12_DWGS\

**MARYLAND DEPARTMENT OF THE ENVIRONMENT**

**AIR AND RADIATION ADMINISTRATION**
**APPLICATION FOR A PERMIT TO CONSTRUCT**

**SUPPLEMENT TO DOCKET # 10-22**

Applicant: City of Westminster

Proposal : One (1) natural gas-fired turbo rotary wastewater sludge dryer rated at 2.05 tons/hr equipped with a Sweco separator rated at 0.4 tons/hr, a cyclone dust collector, a Torit dust collector, and a trickling biofilter

Location: Westminster Wastewater Treatment Plant
1161 Old New Windsor Pike, Westminster, MD 21158

| ITEM | DESCRIPTION |
|---|---|
| 1 | Notice of Tentative Determination, Opportunity to Request a Public Hearing, and Opportunity to Submit Written Comments |
| 2 | Fact Sheet and Tentative Determination |
| 3 | Draft Permit to Construct and Conditions |
| 4 | Supplemental Information |
| 5 | Privilege Log<br>Not Applicable |

**MARYLAND DEPARTMENT OF THE ENVIRONMENT**
**AIR AND RADIATION ADMINISTRATION**

# NOTICE OF TENTATIVE DETERMINATION, OPPORTUNITY TO REQUEST A PUBLIC HEARING, AND OPPORTUNITY TO SUBMIT WRITTEN COMMENTS

## FIRST NOTICE

The Department of the Environment, Air and Radiation Administration (ARA) has completed its review of an application for a Permit to Construct submitted by the City of Westminster on April 1, 2022, for the installation of one (1) natural gas-fired turbo rotary wastewater sludge dryer rated at 2.05 tons/hr, equipped with a Sweco separator rated at 0.4 tons/hr, a cyclone dust collector, a Torit dust collector, and a trickling biofilter. The proposed installation will be located at the Westminster Wastewater Treatment Plant, 1161 Old New Windsor Pike in Carroll County, Maryland.

Pursuant to Section 1-604, of the Environment Article, Annotated Code of Maryland, the Department has made a tentative determination that the Permit to Construct can be issued and is now ready to receive public comment on the application. Copies of the Department's tentative determination, the application, the draft permit to construct with conditions, and other supporting documents are available for public inspection on the Department's website. Look for Docket #10-22 at the following link:

https://mde.maryland.gov/programs/Permits/AirManagementPermits/Pages/index.aspx

Interested persons may request a public hearing and/or submit written comments on the tentative determination. Requests for a public hearing must be submitted in writing and must be received by the Department no later than 20 days from the date of this notice. Written comments must be received by the Department no later than 30 days from the date of this notice.

Interested persons may request an extension to the public comment period. The extension request must be submitted in writing and must be received by the Department no later than 30 days from the date of this notice or within 5 days after the hearing (if a hearing is requested), whichever is later. The public comment period may only be extended one time for a 60-day period.

All requests for a public hearing, requests for an extension to the public comment period, and all written comments should be directed to the attention of Ms. Shannon Heafey, Air Quality Permits Program, Air and Radiation Administration, 1800 Washington Boulevard, Baltimore, Maryland 21230.

Further information may be obtained by calling Ms. Shannon Heafey at 410-537-4433.

Christopher R. Hoagland, Director
Air and Radiation Administration

**MARYLAND DEPARTMENT OF ENVIRONMENT**
**AIR AND RADIATION ADMINISTRATION**

# FACT SHEET AND TENTATIVE DETERMINATION
# CITY OF WESTMINSTER WASTEWATER TREATMENT PLANT
# SLUDGE DRYING FACILITY

## PROPOSED INSTALLATION OF ONE (1) NATURAL GAS-FIRED TURBO ROTARY WASTEWATER SLUDGE DRYER RATED AT 2.05 TONS/HR, EQUIPPED WITH A SWECO SEPARATOR RATED AT 0.4 TONS/HR, A CYCLONE DUST COLLECTOR, A TORIT DUST COLLECTOR, AND A TRICKLING BIOFILTER.

## I. INTRODUCTION

The Maryland Department of the Environment (the "Department") received an application from the City of Westminster (the Permittee) on April 1, 2022 for a Permit to Construct for the installation of one (1) natural gas-fired turbo rotary wastewater sludge dryer rated at 2.05 tons/hr, equipped with a Sweco separator rated at 0.4 tons/hr, a cyclone dust collector, a Torit dust collector, and a trickling biofilter. The proposed installation will be located at the Westminster Wastewater Treatment Plant (WWTP), on 1161 Old New Windsor Pike in Carroll County, Maryland.

A notice was placed in the Carroll County Times on July 21 and July 28, 2022, announcing an opportunity to request an informational meeting to discuss the application for a Permit to Construct. The request period expired on August 10, 2022, and an Information Meeting was not requested.

As required by law, all public notices were also provided to elected officials in all State, county, and municipality legislative districts located within a one-mile radius of the facility's property boundary.

The Department has reviewed the application and has made a tentative determination that the proposed installation is expected to comply with all applicable air quality regulations. A notice will be published to provide the public with opportunities to request a public hearing and to comment on the application, the Department's tentative determination, the draft permit conditions, and other supporting documents. The Department will not schedule a public hearing unless a legitimate request is received.

If the Department does not receive any comments that are adverse to the tentative determination, the tentative determination will automatically become a final determination. If adverse comments are received, the Department will review the comments, and will then make a final determination with regard to issuance or denial of the permit. A notice of final determination will be published in a newspaper of general circulation in the affected area. The final determination may be subject to judicial review pursuant to Section 1-601 of the Environment Article, Annotated Code of Maryland.

## II. CURRENT STATUS AND PROPOSED INSTALLATION

### A. Current Status

The City of Westminster WWTP is an existing municipal wastewater treatment plant owned and operated by the city. The facility is located on 1161 Old New Windsor Pike in Carroll County, Maryland. The Permittee currently has basic wastewater treatment units and does not have a means of treating the wastewater sludge beyond using dewatering process. The Permittee now desires to improve the quality of both the effluent and solid waste produced at the treatment facility to improve the quality of the effluent that ends up in the Chesapeake Bay. Hence, the Permittee has embarked on the facility's modernization infrastructure project which includes the installation of a new dryer and ancillary equipment needed to produce high quality sludge that meets grade level A.

### B. Proposed Installation

The Permittee is proposing to install one (1) natural gas-fired turbo rotary wastewater sludge dryer rated at 2.05 tons/hr, equipped with a Sweco separator rated at 0.4 tons/hr, a cyclone dust collector, a Torit dust collector, and a trickling biofilter. The dryer will be located at the wastewater treatment plant at 1161 Old New Windsor Pike in Carroll County, Maryland. The primary purpose of the proposed modernization project is to produce enhanced effluent through nutrient removal from the wastewater and the production of a class A biosolid material, which the city intends to market as fertilizer and as fuel to Lehigh Cement for cement production.

The pollutants that will be generated from the operation of the equipment will comprise of criteria pollutants - sulfur dioxide (SOx), nitrogen oxides (NOx), particulate matter (PM10), carbon monoxide (CO), volatile organic compounds (VOCs) and lead (PB). Toxics Air Pollutants will also be emitted from the operation of the equipment. These toxic air pollutants are listed in Table III of this Fact Sheet.

The control equipment that will be utilized in the process will comprise of a cyclone for PM control and recovery, Torit duct collector for particulate matter control, and a trickling biofilter for air toxic pollutants, volatile organic compounds, and odor control. The control efficiencies of the control devices are typically greater than ninety percent.

## III. APPLICABLE REGULATIONS

(1) This source is subject to all applicable local and federal air pollution control requirements including, but not limited to the National Emissions Standard for Hazardous Air Pollutant (NESHAP) for emissions to the atmosphere from sludge incineration plants, sludge drying plants or a combination of these that process wastewater treatment plant sludges, 40 CFR Part 61, Subpart E, which contains certain emissions standard, testing, monitoring, notification, record keeping and reporting requirements including, but not limited to the following:

(a) **40 CFR Part 61, Subpart E**, Section 61.52 **-** Emissions Standard.
The Permittee, owner or operator shall limit emissions to the atmosphere from sludge incineration plants, sludge drying plants, or a combination of these that process wastewater plant sludges to 3.2 kg (7.1 lb) of mercury per 24 hours period. **[Reference: §61.52(b)]**

(b) **40 CFR Part 61, Subpart E**, Section 61.53 **-** Stack Sampling.
(d) Sludge Incineration and Drying Plants
(1) "Unless a waiver of emission testing is obtained under §61.13, each owner or operator of a source subject to the standard in §61.52(b) shall test emissions from that source. Such tests shall be conducted in accordance with the procedures set forth either in paragraph (d) of this section or in §61.54." **[Reference: §61.53(d)]**

(2) Method 101A in appendix B or Method 29 in appendix A to part 60 shall be used to test emissions as presented in 61.53(d)(2) through (5) as follows:

(i) "The test shall be performed by May 28, 2014, in the case of an existing source or a new source, which has an initial startup date preceding February 27, 2014.

(ii) The test shall be performed within 90 days of startup in the case of a new source, which did not have an initial startup date preceding February 27, 2014.

(3) The Department shall be notified at least 30 days prior to an emission test, so that it may at its option observe the test.

(4) Samples shall be taken over such a period or periods as are necessary to determine accurately the maximum emissions, which will occur in a 24-hour period. No changes shall be made in the operation, which would potentially increase emissions above the level determined by the most recent stack test, until the new emission level has been estimated by calculation and the results reported to the Department.

(5) All samples shall be analyzed, and mercury emissions shall be determined within 30 days after the stack test. Each determination shall be reported to the Department by a registered letter dispatched within 15 calendar days following the date such determination is completed.

(6) Records of emission test results and other data needed to determine total emissions shall be retained at the source and shall be made available, for inspection by the Department, for a minimum of 5 years.

(2) This source is subject to all applicable federally enforceable State air pollution control requirements including, but not limited to, the following:

(a) **COMAR 26.11.01.04A(1) -** Requirements for Testing.
"The Department may require any person to conduct or have conducted testing to determine compliance with this subtitle. The Department, at its option, may witness or

conduct these tests. This testing will be done at a reasonable time, and all information gathered during a testing operation will be provided to both parties."

(b) **COMAR 26.11.01.07C -** Report of Excess Emissions.

(1) "In the case of any occurrence of excess emissions, expected to last or actually lasting for 1 hour or more, from any installation required by COMAR 26.11.02.13 to obtain a State permit to operate, the owner or operator shall report the onset and shall report the termination of the occurrence to the Department by telephone.

(2) Telephone reports of excess emissions shall include the following information:
   (a) The identity of the installation and the person reporting;
   (b) The nature or characteristics of the emissions (for example, hydrocarbons, fluorides);
   (c) The time of occurrence of the onset of the excess emissions and the actual or expected duration of the occurrence; and
   (d) The actual or probable cause of the excess emissions."

(c) **COMAR 26.11.02.09A -** Sources Subject to Permit to Construct and Approval.
"A person may not construct or modify or cause to be constructed or modified any of the following sources without first obtaining, and having in current effect, the specified permits to construct and approvals: (6) All sources, including installations and air pollution control equipment, except as listed in Regulation .10 of this chapter- permit to construct required."

(d) **COMAR 26.11.06.02C(2) -** Visible Emissions Standards.
"In Areas III and IV a person may not cause or permit the discharge of emissions from any installation or building, other than water in an uncombined form, which is visible to human observers."

Visible Emissions Exceptions **-** COMAR 26.11.06.02A(2)
"The visible emissions standards in §C of this regulation do not apply to emissions during start-up and process modifications or adjustments, or occasional cleaning of control equipment, if:
(1) The visible emissions are not greater than 40 percent opacity; and
(2) The visible emissions do not occur for more than 6 consecutive minutes in any 60-minute period."

(e) **COMAR 26.11.06.03B(2)(a) -** Particulate Matter from Confined Sources
"A person may not cause or permit to be discharged into the outdoor atmosphere from any other installation, particulate matter in excess of 0.03 gr/SCFD (68.7 mg/dscm)."

(f) **COMAR 26.11.06.03D -** Particulate Matter from Materials Handling and Construction.
"A person may not cause or permit any material to be handled, transported, or stored, or a building, its appurtenances, or a road to be used, constructed, altered, repaired, or demolished without taking reasonable precautions to prevent particulate matter from

becoming airborne. These reasonable precautions shall include, but not be limited to, the following when appropriate as determined by the control officer:

(1) Use of water or chemicals for control of dust in the demolition of existing buildings or structures, construction operations, the grading of roads, or the clearing of land.

(2) Application of asphalt, oil, water, or suitable chemicals on dirt roads, materials stockpiles, and other surfaces which can create airborne dusts.

(3) Installation and use of hoods, fans, and dust collectors to enclose and vent the handling of dusty materials. Adequate containment methods shall be employed during sandblasting of buildings or other similar operations.

(4) Covering, at all times when in motion, open-bodied vehicles transporting materials likely to create air pollution. Alternate means may be employed to achieve the same results as would covering the vehicles.

(5) The paving of roadways and their maintenance in clean condition.

(6) The prompt removal from paved streets of earth or other material which has been transported there by trucks or earth moving equipment or erosion by water."

(3) This source is subject to all applicable State-only enforceable air pollution control requirements including, but not limited to, the following regulations:

(a) **COMAR 26.11.02.13A -** Sources Subject to State Permit to Operate.
"Except for a source that is covered by a Part 70 permit, a person may not operate or cause to be operated any of the following sources without first obtaining and having in current effect, a State permit to operate as required by this regulation: (9) other kilns of 1 ton (907 kilograms) or more per hour throughput."

(b) **COMAR 26.11.02.14D -** Procedure for Obtaining State Permit to Operate and Permits to Construct Certain Sources and Permits to Construct Control Equipment on Existing Sources.
"A complete application for the renewal of a State permit to operate shall be submitted not later than 60 days before the expiration date in a State permit to operate. If a timely application for a renewal has been submitted, the current State permit to operate remains in effect until the Department makes a final decision to issue or deny the permit."

(c) **COMAR 26.11.02.19C -** Information Required to be Maintained by a Source.

(1) "Beginning January 1, 1994, the owner or operator of a source for which a permit to operate is required shall maintain records necessary to support the emission certification, including the following information:

(a) The total amount of actual emissions of each regulated pollutant and the total of all regulated pollutants;

(b) An explanation of the methods used to quantify the emissions and the operating schedules and production data that were used to determine emissions, including significant assumptions made;

(c) Amounts, types, and analyses of all fuels used;

(d) Emission data from continuous emission monitors that are required by this subtitle or EPA regulations, including monitor calibration and malfunction information;

(e) Identification, description, and use records of all air pollution control equipment and compliance monitoring equipment, including significant maintenance performed, malfunctions and downtime, and episodes of reduced efficiency of this equipment;

(f) Limitations on source operation or any work practice standards that significantly affect emissions; and

(g) Other relevant information as required by the Department.

(2) The logs and other records of information required by §C(1) of this regulation shall be retained for a period of 5 years and made available to the Department upon request.

(3) If the owner or operator of a source for which a permit to operate is required fails to maintain or provide the data required by this section, which the Department requests in order to verify the emissions during the previous calendar year, the annual emission-based fee for that source shall be based on the estimated allowable emissions, as defined in COMAR 26.11.01.01B(4), of that source, as determined by the Department."

(d) **COMAR 26.11.02.19D -** Emission Certification.

(1) "Beginning January 1, 1994, the responsible official designated by the owner or operator of a source for which a permit to operate is required shall certify, as provided at Regulation .02F of this chapter, the actual emissions of regulated air pollutants from all installations at the plant or facility.

(2) Certification shall be on a form obtained from the Department and shall be submitted to the Department not later than April 1 of the year following the year for which certification is required."

(e) **COMAR 26.11.06.08 -** Nuisance.
"An installation or premises may not be operated or maintained in such a manner that a nuisance or air pollution is created. Nothing in this regulation relating to the control of emissions may in any manner be construed as authorizing or permitting the creation of, or maintenance of, nuisance or air pollution."

(f) **COMAR 26.11.06.09 -** Odors.
"A person may not cause or permit the discharge into the atmosphere of gases, vapors, or odors beyond the property line in such a manner that a nuisance or air pollution is created."

(g) **COMAR 26.11.15.05(A) -** Control Technology Requirement.
"New or Reconstructed Installations. A person may not construct, reconstruct, operate, or cause to be constructed, reconstructed, or operated, any new installation or source that will discharge a toxic air pollutant to the atmosphere without installing and operating T-BACT."

(h) **COMAR 26.11.15.06(A)(1) -** Ambient Impact Requirement - Requirements for New Installations, Sources, or Premises.
A(1) "Except as provided in §A(2) of this regulation, a person may not construct, modify, or operate, or cause to be constructed, modified, or operated, any new installation or source without first demonstrating to the satisfaction of the Department using procedures established in this chapter that total allowable emissions from the premises of each toxic air pollutant discharged by the new installation or source will not unreasonably endanger human health."

## IV. GENERAL AIR QUALITY

The U.S. Environmental Protection Agency (EPA) has established primary and secondary National Ambient Air Quality Standards (NAAQS) for six (6) criteria pollutants, i.e., sulfur dioxide, particulate matter, carbon monoxide, nitrogen dioxide, ozone, and lead. The primary standards were established to protect public health, and the secondary standards were developed to protect against non-health effects such as damage to property and vegetation.

The Department utilizes a statewide air monitoring network, operated in accordance with EPA guidelines, to measure the concentrations of criteria pollutants in Maryland's ambient air. The measurements are used to project statewide ambient air quality, and currently indicate that the Carroll County areas complies with the NAAQS for sulfur dioxide, particulate matter, carbon monoxide, nitrogen dioxide, and lead.

Ground level ozone continues to present a problem for the entire Baltimore metropolitan area, which is classified as a non-attainment area for ozone. The primary contributors to the formation of ozone are emissions of oxides of nitrogen, primarily from combustion equipment, and emissions of Volatile Organic Compounds (VOC) such as paint solvents and gasoline vapors. Carroll County is included in the Baltimore non-attainment area for ozone.

With regard to toxic air pollutants (TAPs), screening levels (i.e., acceptable ambient concentrations for toxic air pollutants) are generally established at 1/100 of allowed worker exposure levels (TLVs)[1]. The Department has also developed additional screening levels for carcinogenic compounds. The additional screening levels are established such that continuous exposure to the subject TAP at the screening level for a period of 70 years is expected to cause an increase in lifetime cancer risk of no more than 1 in 100,000.

## V. COMPLIANCE DEMONSTRATION AND ANALYSIS

The proposed installation must comply with all State imposed emissions limitations and screening levels, as well as the NAAQS. The Department has conducted an engineering and air quality review of the application. The emissions were projected based on EPA emissions factors and data from similar facilities.

The conservative U.S. EPA's SCREEN3 equivalent model – the Lakes Environmental model was used to project the maximum ground level concentrations from the proposed facility, which were then compared to the screening levels and the NAAQS.

**A. Estimated Emissions -** The maximum emissions of air pollutants of concern from the proposed installation are listed in Table I.

**B. Compliance with National Ambient Air Quality Standards -** The maximum ground level concentrations for sulfur dioxide, particulate matter, carbon monoxide, nitrogen dioxide, and lead based on the emissions from the proposed installation are listed in column 2 of Table II. The combined impact of the projected contribution from the proposed installation and the ambient background concentration for each pollutant shown in column 3 of Table II is less than the NAAQS for each pollutant shown in column 4. Emissions of oxides of nitrogen and VOC will each be less than 25 tons per year, the major source threshold applicable in the area, and will not significantly impact the ground level concentration of ozone in the area.

**C. Compliance with Air Toxics Regulations -** The toxic air pollutants of concern that would be emitted from this installation are listed in column 1 of Table III. The predicted maximum off-site ambient concentrations of these toxic air pollutants are shown in column 5 of Table III, and in each case the maximum concentration is less than the

[1] TLVs are threshold limit values (exposure limits) established for toxic materials by the American Conference of Governmental Industrial Hygienists (ACGIH). Some TLVs are established for short-term exposure (TLV – STEL), and some are established for longer-term exposure (TLV – TWA), where TWA is an acronym for time-weight average.

corresponding screening level for the toxic air pollutant shown in column 4.

## VI. TENTATIVE DETERMINATION

Based on the above information, the Department has concluded that the proposed installation will comply with all applicable Federal and State air quality control requirements. In accordance with the Administrative Procedure Act, Department has made a tentative determination to issue the Permit to Construct.

Enclosed with the tentative determination is a copy of the draft Permit to Construct.

**TABLE I**
**PROJECTED MAXIMUM EMISSIONS FROM THE PROPOSED INSTALLATION**

| POLLUTANT | PROJECTED MAXIMUM EMISSIONS FROM PROPOSED INSTALLATION | |
|---|---|---|
| | (lbs/day) | (tons/year) |
| Nitrogen Dioxide ($NO_2$) | 16.80 | 1.31 |
| Sulfur Dioxide ($SO_2$) | 0.10 | 0.0078 |
| Carbon Monoxide (CO) | 14.11 | 1.1 |
| Volatile Organic Compounds (VOC) | 0.09 | 0.0072 |
| Particulate Matter ($PM_{10}$) | 0.013 | 0.001 |
| Lead (PB) | 0.000084 | 0.000007 |

Emissions are based on pounds per day and 156 days per year calculations.

**TABLE II**
**PROJECTED IMPACT OF EMISSIONS OF CRITERIA POLLUTANTS FROM THE PROPOSED INSTALLATION ON AMBIENT AIR QUALITY**

| **POLLUTANTS** | **MAXIMUM OFF-SITE GROUND LEVEL CONCENTRATIONS CAUSED BY EMISSIONS FROM PROPOSED PROCESS ($\mu g/m^3$)** | **BACKGROUND AMBIENT AIR CONCENTRATIONS ($\mu g/m^3$)*** | **NATIONAL AMBIENT AIR QUALITY STANDARDS (NAAQS) ($\mu g/m^3$)** |
|---|---|---|---|
| Nitrogen Dioxide ($NO_2$) | annual avg.→ 7.58 | annual avg.→ 15.4 | annual avg.→ 100 |
| Carbon Monoxide (CO) | 8-hour max→ 55.7<br>1-hour max → 79.6 | 8-hr max.→ 1088<br>1-hr max.→ 1526.4 | 8-hr max.→ 10,000<br>1-hr max.→ 40,000 |
| Sulfur Dioxide ($SO_2$) | 24-hour max. → 0.23<br>annual avg. →0.034 | 24-hour max.→ 7.7<br>annual avg.→1.1 | 24-hour max.→ 366<br>annual avg.→ 78.5 |
| Particulate Matter ($PM_{10}$) | 24-hr max → 0.29 | 24-hr max.→ 26 | 24-hr max.→ 150 |

*Background concentrations were obtained from Maryland air monitoring stations as follows:
$NO_2$, CO, $SO_2$ and $PM_{10}$→ HU-Beltsville Monitoring Station in Prince George's County

**TABLE III**
**PREDICTED MAXIMUM OFF-SITE AMBIENT CONCENTRATIONS FOR TOXIC AIR POLLUTANTS EMITTED FROM THE PROPOSED INSTALLATION**

| | | | MOST STRINGENT SCREENING LEVEL UG/M3) | | | PREDICTED IMPACT (UG/M3) 1-HR/ 8-HR /Annual | | |
|---|---|---|---|---|---|---|---|---|
| Tap | Cas # | Emission Rate (lb/hr) | 1-HR | 8-HR | Annual | | | |
| Ammonia | 7664-41-7 | 4.15E-02 | 2.44E+02 | 1.74E+02 | NA | 5.61E-01 | 3.93E-01 | NA |
| Arsenic | 7440-38-2 | 2.244E-05 | NA | 1.00E-01 | 2.00E-04 | NA | 8.75E-06 | 9.24E-08 |
| Barium | 7440-39-3 | 7.29E-05 | NA | 5.00E+00 | NA | NA | 3.29E-04 | NA |
| Benzene | 71-43-2 | 8.31E-07 | 7.99E+01 | 1.60E+01 | 1.30E-01 | 1.12E-04 | 7.87E-05 | 8.99E-06 |
| Berylium | 7440-41-7 | 4.76E-09 | 1.00E-01 | 2.00E-02 | 2.40E-03 | 6.44E-07 | 4.51E-07 | 5.15E-08 |
| Butane | 106-97-8 | 8.30E-04 | NA | 2.38E+04 | NA | NA | 7.87E-02 | NA |
| Calcium | 471-34-1 | 1.33E-03 | NA | 2.64E+02 | NA | NA | 1.26E-01 | NA |
| Ethane | 74-84-0 | 1.23E-03 | NA | 1.23E+04 | NA | NA | 1.16E-01 | NA |
| Formaldehyde | 50-00-0 | 2.97E-05 | NA | 2.03E+01 | 8.00E-02 | NA | 2.81E-03 | 3.21E-04 |
| Hydrogen Sulfide | 7783064 | 7.30E-05 | 6.97E+01 | 1.39E+01 | NA | 9.87E-03 | 6.91E-03 | NA |
| Iron | 1309371 | 2.08E-05 | NA | 5.00E+01 | NA | NA | 1.97E-03 | NA |
| Magnesium | 7786303 | 2.78E-05 | NA | 6.58E+01 | NA | NA | 2.63E-03 | NA |
| Methyl Mercaptain | 74931 | 3.75E-04 | NA | 9.84E+00 | NA | NA | 3.55E-02 | NA |
| Nitrogen Oxide (N2O) | 10024-97-2 | 6.95E-05 | NA | 9.00E+02 | NA | NA | 6.58E-03 | NA |
| Pentane | 109660 | 1.03E-03 | NA | 1.77E+04 | NA | NA | 9.74E-02 | NA |
| Phosphate (as P2O5) | 1314563 | 7.64E-05 | NA | 2.71E+01 | NA | NA | 7.24E-03 | NA |
| Polycyclic Biphenyls (as Aroclor 1016 and 1254) | 1336-36-3 /11097-69-1 | 2.38E-09 | NA | 4.47E+02 | NA | NA | 2.25E-07 | NA |
| Sodium | 7647145 | 3.47E-06 | NA | 4.20E+03 | NA | NA | 3.29E-04 | NA |
| Zinc | 7440666 | 1.39E-05 | 1.00E+03 | 5.00E+02 | NA | 1.88E-03 | 1.32E-03 | NA |

| Tap | Cas # | Emission Rate (lb/hr) | MOST STRINGENT SCREENING LEVEL UG/M3) 1-HR | 8-HR | Annual | PREDICTED IMPACT (UG/M3) 1-HR/ 8-HR /Annual | | |
|---|---|---|---|---|---|---|---|---|
| Cadmium | 7440438 | 1.36E-05 | NA | 2.00E-02 | 6.00E-04 | NA | 1.28E-03 | 1.47E-04 |
| Carbon Tetrachloride | 56235 | 1.27E-06 | 6.29E+02 | 3.15E+02 | 7.00E-02 | 1.73E-04 | 1.21E-04 | 1.38E-05 |
| Chlorobenzene | 108907 | 1.27E-06 | NA | 4.60E+02 | - | NA | 1.21E-04 | NA |
| Chloroform | 67663 | 1.27E-06 | NA | 4.88E+02 | 4.00E-02 | NA | 1.21E-04 | 1.38E-05 |
| Chromium | 7440473 | 4.79E-04 | NA | 5.00E+00 | NA | NA | 4.53E-02 | NA |
| Copper | 7440508 | 6.84E-04 | NA | 2.00E+00 | NA | NA | 6.48E-02 | NA |
| o-DICHLOROBENZENE | 95501 | 1.27E-05 | 3.01E+03 | 1.50E+03 | NA | 1.73E-03 | 1.21E-03 | NA |
| Hexachloroethane | 67721 | 1.27E-06 | - | 9.68E+01 | 3.00E-01 | NA | 1.21E-04 | 1.38E-05 |
| Hydrogen Sulfide | 7783064 | 4.29E-03 | 6.97E+01 | 1.39E+01 | NA | 5.81E-01 | 4.07E-01 | NA |
| Lead | 7439921 | 1.34E-04 | NA | 5.00E-01 | NA | NA | 1.27E-02 | NA |
| Melybdenum | 7439987 | 1.19E-05 | NA | 5.00E+00 | NA | NA | 1.13E-03 | NA |
| Mercury | 7439975 | 9.08E-06 | 3.00E-01 | 1.00E-01 | NA | 1.23E-03 | 8.60E-04 | NA |
| Nickel, Soluble Compounds, As NI | 7440020 | 6.71E-05 | NA | 1.00E+00 | NA | NA | 6.36E-03 | NA |
| Polychlorinated Biphenyls (PCBs) | 1336363 | 2.63E-07 | NA | 2.60E+01 | 1.00E-02 | 3.55E-05 | 2.49E-05 | NA |
| PERC, perchloroethylene, tetrachloroethylene | 127184 | 1.27E-06 | 6.78E+03 | 1.70E+03 | NA | 1.73E-04 | 1.21E-04 | NA |
| Selenium | 7782492 | 1.59E-05 | NA | 2.00E+00 | NA | NA | 1.51E-03 | NA |
| Trichloroethene | 79016 | 1.28E-06 | 1.34E+03 | 5.37E+02 | NA | 1.73E-04 | 1.21E-04 | NA |
| Trichlorophenol | 86737 | 1.27E-06 | NA | 2.00E+01 | NA | NA | 1.21E-04 | NA |
| Vinyl Chloride | 75014 | 1.27E-06 | NA | 2.56E+01 | 2.30E-01 | NA | 1.21E-04 | 1.38E-05 |
| Total | | 5.24E-02 | | | | | | |

The values represent maximum facility-wide emissions of toxic air pollutants during any 1-hour period of facility operation. The values are based on worst-case emissions from the proposed facility and were predicted by EPA's SCREEN3 equivalent Lakes Environmental model, which provides conservative estimations concerning the impact of pollutants on ambient air quality.

**DRAFT PERMIT**

Wes Moore
Governor

Serena McIlwain
Secretary

# Air and Radiation Administration

1800 Washington Boulevard, Suite 720
Baltimore, MD 21230

☒ Construction Permit ☒ Temporary Operating Permit

PERMIT NO.:
013-0382-6-0453

DATE ISSUED:
TBD

PERMIT FEE: $2,000 (Paid)

EXPIRATION DATE:
In accordance with COMAR 26.11.02.04B

**LEGAL OWNER & ADDRESS**

City of Westminster Wastewater Treatment Plant
1161 Old New Windsor Pike,
Westminster, MD 21158
Attn: Vance Summerhill, Superintendent

**SITE**

Same
1161 Old New Windsor Pike
Westminster, MD 21158
Carroll County
Premises #013-0382
AI # 23482

**SOURCE DESCRIPTION**

One (1) natural gas fired turbo rotary wastewater sludge dryer with a throughput of 2.05 tons per hour eqipped with a Sweco separator rated at 0.4 ton/hour, a cyclone dust collector, a Torit dust collector, and a trickling biofilter.

This source is subject to the conditions described on the attached pages.



Program Manager

Director, Air and Radiation Administration

**CITY OF WESTMINSTER**
**WASTEWATER TREATMENT PLANT**
**BIOSOLIDS TREATMENT FACILTY**
**PERMIT TO CONSTRUCT CONDITIONS**
**PERMIT NO. 013-0382-6-0453**

**INDEX**

**Part A -** General Provisions
**Part B -** Applicable Regulations
**Part C -** Construction Requirements
**Part D -** Operating Requirements
**Part E -** Testing and Monitoring Requirements
**Part F -** Record Keeping and Reporting Requirements
**Part G -**Temporary Permit-To-Operate Conditions

---

## PART A - GENERAL PROVISIONS

(1) The following applications for Permit to Construct for a sludge dryer construction project, which includes the installation of one (1) natural gas-fired turbo rotary wastewater sludge dryer rated at 2.05 tons/hr equipped with a Sweco separator rated at 0.4 tons/hr, a cyclone dust collector, a Torit dust collector, and a trickling biofilter at an existing wastewater treatment plant, are incorporated by reference in this permit:

(a) Application for Processing or Manufacturing Equipment Form # 5 for a biosolids dryer received on April 1, 2022.

(b) Application for Processing or Manufacturing Equipment Form # 5 for a Sweco Separator received on April 1, 2022.

(c) Application for Permit to Construct Gas Cleaning or Emission Control Equipment Form # 6 for a Cyclone Dust Collector received on April 1, 2022.

(d) Application for Permit to Construct Gas Cleaning or Emission Control Equipment Form # 6 for a Torit Dust Collector received on April 1, 2022.

(e) Application for Permit to Construct Gas Cleaning or Emission Control Equipment Form # 6 for an Odor Treatment Bio-trickling Filter received on April 1, 2022.

(f) Toxic Air Pollutant (TAP) Emissions Summary and Compliance Demonstrations (Form 5T) received on September 9, 2022.

(g) Emissions Point Data (Form 5EP) received on September 9, 2022.

If there are any discrepancies between the permit and the applications, the conditions on the permit will take precedence. In the applications, estimates of dimensions, volumes, emission rates, operating rates, feed rates and hours of operation are not deemed to constitute enforceable numeric limits except to the extent that they are necessary to make a determination of compliance with applicable regulations.

(2) Upon presentation of credentials, representatives of the Maryland Department of the Environment ("MDE" or the "Department") and the Carroll County Health Department shall at any reasonable time be granted, without delay and without prior notification, access to the Permittee's property and permitted to:

(a) Inspect any construction authorized by this permit;

(b) Sample, as necessary to determine compliance with requirements of this permit, any materials stored or processed on-site, any waste materials, and any discharge into the environment;

(c) Inspect any monitoring equipment required by this permit;

(d) Review and copy any records, including all documents required to be maintained by this permit, relevant to a determination of compliance with requirements of this permit; and

(e) Obtain any photographic documentation or evidence necessary to determine compliance with the requirements of this permit.

(3) Prior to any increase in the quantities and/or change in the types of materials stated in the application or limited by the permit, notification shall be provided to the Department. If the Department determines that the change constitutes a modification, the Permittee shall obtain a permit to construct prior to the modification.

(4) If any provision of this permit shall be held invalid for any reason, the remaining provisions shall remain in full force and effect, and such invalid provisions shall be considered severed and deleted from this permit.

(5) Nothing in this permit authorizes the violation of any rule or regulation or the creation of a nuisance or air pollution.

## PART B - APPLICABLE REGULATIONS

(1) This source is subject to all applicable local and federal air pollution control requirements including, but not limited to the National Emissions Standard for Hazardous Air Pollutants (NESHAP) for emissions to the atmosphere from sludge incineration plants, sludge drying plants or a combination of these that process wastewater treatment plant sludges, 40 CFR Part 61, Subpart E, which contains certain emissions standard, testing, monitoring, notification, record keeping and reporting requirements including, but not limited to the following:

(a) **40 CFR Part 61, Subpart E**, Section 61.52 **-** Emissions Standard.
The Permittee, owner or operator shall limit emissions to the atmosphere from sludge incineration plants, sludge drying plants, or a combination of these that process wastewater plant sludges to 3.2 kg (7.1 lb) of mercury per 24 hours period.
**[Reference: §61.52(b)]**

(b) **40 CFR Part 61, Subpart E**, Section 61.53 **-** Stack Sampling.
(d) Sludge Incineration and Drying Plants
(1) "Unless a waiver of emission testing is obtained under §61.13, each owner or operator of a source subject to the standard in §61.52(b) shall test emissions from that source. Such tests shall be conducted in accordance with the procedures set forth either in paragraph (d) of this section or in §61.54."
**[Reference: §61.53(d)]**

(2) Method 101A in appendix B or Method 29 in appendix A to part 60 shall be used to test emissions as presented in 61.53(d)(2) through (5) as follows:

(i) "The test shall be performed by May 28, 2014, in the case of an existing source or a new source, which has an initial startup date preceding February 27, 2014.

(ii) The test shall be performed within 90 days of startup in the case of a new source, which did not have an initial startup date preceding February 27, 2014.

(3) The Department shall be notified at least 30 days prior to an emission test, so that it may at its option observe the test.

(4) Samples shall be taken over such a period or periods as are necessary to determine accurately the maximum emissions, which will occur in a 24-hour period. No changes shall be made in the operation, which would potentially increase emissions above the level determined by the most recent stack test, until the new emission level has been estimated by calculation and the results reported to the Department.

(5) All samples shall be analyzed, and mercury emissions shall be determined within 30 days after the stack test. Each determination shall be reported to the Department by a registered letter dispatched within 15 calendar days following the date such determination is completed."

(6) Records of emission test results and other data needed to determine total emissions shall be retained at the source and shall be made available, for inspection by the Department, for a minimum of 5 years.

(2) This source is subject to all applicable federally enforceable State air pollution control requirements including, but not limited to, the following:

(a) **COMAR 26.11.01.04A(1) -** Requirements for Testing.
"The Department may require any person to conduct or have conducted testing to determine compliance with this subtitle. The Department, at its option, may witness or conduct these tests. This testing will be done at a reasonable time, and all information gathered during a testing operation will be provided to both parties."

(b) **COMAR 26.11.01.07C -** Report of Excess Emissions.
(1) "In the case of any occurrence of excess emissions, expected to last or actually lasting for 1 hour or more, from any installation required by COMAR 26.11.02.13 to obtain a State permit to operate, the owner or operator shall report the onset and shall report the termination of the occurrence to the Department by telephone.

(2) Telephone reports of excess emissions shall include the following information:
(a) The identity of the installation and the person reporting;
(b) The nature or characteristics of the emissions (for example, hydrocarbons, fluorides);
(c) The time of occurrence of the onset of the excess emissions and the actual or expected duration of the occurrence; and
(d) The actual or probable cause of the excess emissions."

(c) **COMAR 26.11.02.09A -** Sources Subject to Permit to Construct and Approval.
"A person may not construct or modify or cause to be constructed or modified any of the following sources without first obtaining, and having in current effect, the specified permits to construct and approvals: (6) All sources, including installations and air pollution control equipment, except as listed in Regulation .10 of this chapter- permit to construct required."

(d) **COMAR 26.11.06.02C(2) -** Visible Emissions Standards.
"In Areas III and IV a person may not cause or permit the discharge of emissions from any installation or building, other than water in an uncombined form, which is visible to human observers.

Visible Emissions Exceptions **-** COMAR 26.11.06.02A(2)
"The visible emissions standards in §C of this regulation do not apply to emissions during start-up and process modifications or adjustments, or occasional cleaning of control equipment, if:
(1) The visible emissions are not greater than 40 percent opacity; and
(2) The visible emissions do not occur for more than 6 consecutive minutes in any 60-minute period."

(e) **COMAR 26.11.06.03B(2)(a) -** Particulate Matter from Confined Sources
"A person may not cause or permit to be discharged into the outdoor atmosphere from any other installation, particulate matter in excess of 0.03 gr/SCFD (68.7 mg/dscm)."

(f) **COMAR 26.11.06.03D -** Particulate Matter from Materials Handling and Construction.
"A person may not cause or permit any material to be handled, transported, or stored, or a building, its appurtenances, or a road to be used, constructed, altered, repaired, or demolished without taking reasonable precautions to prevent particulate matter from becoming airborne. These reasonable precautions shall include, but not be limited to, the following when appropriate as determined by the control officer:

(1) Use of water or chemicals for control of dust in the demolition of existing buildings or structures, construction operations, the grading of roads, or the clearing of land.

(2) Application of asphalt, oil, water, or suitable chemicals on dirt roads, materials stockpiles, and other surfaces which can create airborne dusts.

(3) Installation and use of hoods, fans, and dust collectors to enclose and vent the handling of dusty materials. Adequate containment methods shall be employed during sandblasting of buildings or other similar operations.

(4) Covering, at all times when in motion, open-bodied vehicles transporting materials likely to create air pollution. Alternate means may be employed to achieve the same results as would covering the vehicles.

(5) The paving of roadways and their maintenance in clean condition.

(6) The prompt removal from paved streets of earth or other material which has been transported there by trucks or earth moving equipment or erosion by water."

(3) This source is subject to all applicable State-only enforceable air pollution control requirements including, but not limited to, the following regulations:

(a) **COMAR 26.11.02.13A -** Sources Subject to State Permit to Operate.
"Except for a source that is covered by a Part 70 permit, a person may not operate or cause to be operated any of the following sources without first obtaining and having in current effect, a State permit to operate as required by this regulation: (9) other kilns of 1 ton (907 kilograms) or more per hour throughput."

(b) **COMAR 26.11.02.14D -** Procedure for Obtaining State Permit to Operate and Permits to Construct Certain Sources and Permits to Construct Control Equipment on Existing Sources.
"A complete application for the renewal of a State permit to operate shall be submitted not later than 60 days before the expiration date in a State permit to operate. If a timely application for a renewal has been submitted, the current State permit to operate remains in effect until the Department makes a final decision to issue or deny the permit."

(c) **COMAR 26.11.02.19C -** Information Required to be Maintained by a Source.
(1) "Beginning January 1, 1994, the owner or operator of a source for which a permit to operate is required shall maintain records necessary to support the emission certification, including the following information:

(a) The total amount of actual emissions of each regulated pollutant and the total of all regulated pollutants;

(b) An explanation of the methods used to quantify the emissions and the operating schedules and production data that were used to determine emissions, including significant assumptions made;

(c) Amounts, types, and analyses of all fuels used;

(d) Emission data from continuous emission monitors that are required by this subtitle or EPA regulations, including monitor calibration and malfunction information;

(e) Identification, description, and use records of all air pollution control equipment and compliance monitoring equipment, including significant maintenance performed, malfunctions and downtime, and episodes of reduced efficiency of this equipment;

(f) Limitations on source operation or any work practice standards that significantly affect emissions; and

(g) Other relevant information as required by the Department.

(2) The logs and other records of information required by §C(1) of this regulation shall be retained for a period of 5 years and made available to the Department upon request.

(3) If the owner or operator of a source for which a permit to operate is required fails to maintain or provide the data required by this section, which the Department requests in order to verify the emissions during the previous calendar year, the annual emission-based fee for that source shall be based on the estimated allowable emissions, as defined in COMAR 26.11.01.01B(4), of that source, as determined by the Department."

(d) **COMAR 26.11.02.19D -** Emission Certification.

(1) "Beginning January 1, 1994, the responsible official designated by the owner or operator of a source for which a permit to operate is required shall certify, as provided at Regulation .02F of this chapter, the actual emissions of regulated air pollutants from all installations at the plant or facility.

(2) Certification shall be on a form obtained from the Department and shall be submitted to the Department not later than April 1 of the year following the year for which certification is required."

(e) **COMAR 26.11.06.08 -** Nuisance.

"An installation or premises may not be operated or maintained in such a manner that a nuisance or air pollution is created. Nothing in this regulation relating to the control of emissions may in any manner be construed as authorizing or permitting the creation of, or maintenance of, nuisance or air pollution."

(f) **COMAR 26.11.06.09 -** Odors.

"A person may not cause or permit the discharge into the atmosphere of gases, vapors, or odors beyond the property line in such a manner that a nuisance or air pollution is created."

(g) **COMAR 26.11.15.05(A) -** Control Technology Requirement.
"New or Reconstructed Installations. A person may not construct, reconstruct, operate, or cause to be constructed, reconstructed, or operated, any new installation or source that will discharge a toxic air pollutant to the atmosphere without installing and operating T-BACT."

(h) **COMAR 26.11.15.06(A)(1) -** Ambient Impact Requirement - Requirements for New Installations, Sources, or Premises.
A(1) "Except as provided in §A(2) of this regulation, a person may not construct, modify, or operate, or cause to be constructed, modified, or operated, any new installation or source without first demonstrating to the satisfaction of the Department using procedures established in this chapter that total allowable emissions from the premises of each toxic air pollutant discharged by the new installation or source will not unreasonably endanger human health."

## PART C - CONSTRUCTION REQUIREMENTS

(1) Except as otherwise provided in this part, the Permittee shall construct the natural gas-fired turbo rotary wastewater sludge dryer rated at 2.05 tons/hr, equipped with a Sweco separator rated at 0.4 tons/hr, a cyclone dust collector, a Torit dust collector, and a trickling biofilter in accordance with the information in the permit application and or the manufacturer's recommendation.

(2) The Permittee shall construct the installations in such a manner as to comply with all applicable requirements and regulations.

## PART D - OPERATING REQUIREMENTS

(1) The Permittee shall maintain and operate all the installations with potential to cause air pollution, and any associated air pollution control equipment, in such a manner as to ensure full and continuous compliance with all applicable regulations.

(2) The Permittee shall properly maintain, and keep in good working condition, all control panel instrumentation and monitoring devices that the Permittee uses to determine if the air pollution control equipment is operating as designed.

(3) The Permittee shall maintain and operate all installations in accordance with the information in the permit application and or with the manufacturer's recommendations.

## PART E - TESTING AND MONITORING REQUIREMENTS

(1) The Permittee, owner or operator of a sludge drying plant subject to the standard in §61.52(b) shall test emissions from that source. Such tests shall be conducted in accordance with the procedures set forth either in paragraph (d)(1) - (5) of §61.53 as outlined below or as in §61.54 unless a waiver of emission testing is obtained under §61.13.

(2) The Permittee, owner or operator shall use Method 101A in appendix B or Method 29 in appendix A to part 60 to test emissions as follows:

(i) The test shall be performed by May 28, 2014, in the case of an existing source or a new source, which has an initial startup date preceding February 27, 2014.

(ii) The test shall be performed within 90 days of startup in the case of a new source, which did not have an initial startup date preceding February 27, 2014.

(3) The Permittee, owner or operator shall notify the Department at least 30 days prior to an emission test, so that the Department may at its option observe the test.

(4) The Permittee, owner or operator shall take samples "over such a period or periods as are necessary to determine accurately the maximum emissions, which will occur in a 24-hour period. No changes shall be made in the operation, which would potentially increase emissions above the level determined by the most recent stack test, until the new emission level has been estimated by calculation and the results reported to the Department.

(5) The Permittee, owner or operator shall analyze all samples and determine mercury emissions within 30 days after the stack test. Each determination shall be reported to the Department by a registered letter dispatched within 15 calendar days following the date such determination is completed. **[Reference: §61.53(d)(5)]**

(6) As an alternative means for demonstrating compliance with §61.52(b), the Permittee, owner or operator may use Method 105 of appendix B and the procedures specified in this section. **[Reference: §61.54(a)]**

(7) No changes in the operation of a plant shall be made after a sludge test has been conducted which would potentially increase emissions above the level determined by the most recent sludge test, until the new emission level has been estimated by calculation and the results reported to the Administrator. **[Reference: §61.54(e)]**

(8) All sludge samples shall be analyzed for mercury content within 30 days after the sludge sample is collected. Each determination shall be reported to the Department by a registered letter dispatched within 15 calendar days following the date such determination is completed. **[Reference: §61.54(f)]**

(9) The Permittee, owner or operator shall monitor mercury emissions at all the sources for which mercury emissions exceed 1.6 kg (3.5 lb) per 24-hour period, demonstrated either by stack sampling according to §61.53 or sludge sampling according to §61.54, at intervals of at least once per year by use of Method 105 of appendix B or the procedures specified in §61.53 (d) (2) and (4). **[Reference: §61.55(a)]**

## PART F - RECORD KEEPING AND REPORTING REQUIREMENTS

(1) The Permittee, owner or operator shall retain at the source for a minimum of five years and make available to the Department upon request, records of emissions test results, sludge sampling, charging rate determination and other data needed to determine mercury content of wastewater treatment plant sludges. **[Reference: §61.53(d)(6)]**

(2) The Permittee, owner or operator shall record and report the results of monitoring of all sources for which mercury emissions exceed 1.6 kg (3.5 lb) per 24-hour period demonstrated either by stack sampling according to §61.53 or sludge sampling according to §61.54, in accordance with **§61.53(d) (5)** and **(6)** or **§61.54 (f) and (g)**. **[Reference: §61.55(a)]**

(3) The Permittee shall keep the following records at the site for at least five (5) years to support the annual emissions certification report:

(a) The total amount of actual emissions of each regulated pollutant and the total of all regulated pollutants;

(b) An explanation of the methods used to quantify the emissions and the operating schedules and production data that were used to determine emissions, including significant assumptions made;

(c) Amounts, types, and analyses of all fuels used;

(d) Emissions data from continuous emission monitors that are required by this subtitle or EPA regulations, including monitor calibration and malfunction information;

(e) Identification, description, and use records of all air pollution control equipment and compliance monitoring equipment including:

(i) Significant maintenance performed;

(ii) Malfunctions and downtime; and

(iii) Episodes of reduced efficiency of all the equipment; limitations on source operation or any work practice standards that significantly affect emissions; and

(f) Other relevant information as required by the Department.

(4) The Permittee shall submit to the Department by April 1 of each year during the term of this permit a certification of emissions for the previous calendar year. The certifications shall be prepared in accordance with the applicable requirements adopted under COMAR 26.11.02.19D.

(a) Certifications of emissions shall be submitted on forms obtained from the Department.

(b) A certification of emissions shall include mass emissions rates for each regulated pollutant and the total mass emissions rate for all regulated pollutants for each of the Permittee's registered sources of emissions.

(c) The person responsible for a certification of emissions shall certify the submittal to the Department in the following manner:

"I certify under penalty of law that this document and all attachments were prepared under my direction or supervision in accordance with a system designed to assure that qualified personnel properly gather and evaluate the information submitted. Based on my inquiry of the person or persons who manage the system, or those persons directly responsible for gathering the information, the information submitted is, to the best of my knowledge and belief, true, accurate, and complete. I am aware that there are significant penalties for submitting false information, including the possibility of fine and imprisonment for knowing violations."

(5) By April 1 of each year during the term of this permit, the Permittee shall certify in writing to the Department the results of an air toxics analysis for the previous calendar year. The air toxics analysis shall include either:

(a) A statement that the Permittee's previously submitted toxics compliance demonstrations remain valid; or

(b) If changes in the Permittee's operations warrant, a new toxics compliance demonstration, a statement that the new toxics analysis developed in accordance with the requirements set forth under COMAR 26.11.15 complies with the regulation.

(6) The Permittee shall report periods of excess emissions as required by COMAR 26.11.01.07C to the Air Quality Compliance Program of the Air and Radiation Administration's Western Maryland Field Office at 301-689-5756.

(7) All notifications and reports required by this permit shall be submitted to the Compliance Program via the link: mdeair.ECR@maryland.gov or to the:

Administrator
Compliance Program
Maryland Department of the Environment
Air and Radiation Administration
1800 Washington Boulevard, Suite 715
Baltimore, MD 21230

and

United States Environmental Protection Agency
Region III, Enforcement & Compliance Assurance Division
Air, RCRA and Toxics Branch (3ED21)
Four Penn Center
1600 John F. Kennedy Boulevard
Philadelphia, PA 19103-2852

## PART G - TEMPORARY PERMIT-TO-OPERATE CONDITIONS

(1) This Permit-to-Construct shall also serve as a temporary Permit-to-Operate and confers upon the Permittee authorization to operate the sludge dryer for a start-up period of 180 days after the initial start-up. This period shall be used to demonstrate compliance with all applicable air quality regulation and permit to construct conditions. If the Permittee is unable to complete the compliance demonstration during this period, the Permittee shall submit to the Department a written request for an extension of the temporary permit to operate. The request shall include a completed permit to operate application.

(2) The Permittee shall notify the Department in writing of the anticipated date of initial start-up of the facility not less than 30 days prior to such date.

(3) The Permittee shall notify the Department in writing of the actual date of start-up of the facility no later than 15 days after the initial start-up date.

(4) The Permittee shall submit to the Department, an application for a State permit-to-operate no later than 60 days prior to expiration of the effective period of the temporary permit-to-operate.

(5) During the effective period of the temporary permit-to-operate the Permittee shall operate the sludge dryer and associated installations as required by the applicable terms and conditions of this Permit-to-Construct, and in accordance with operating procedures and recommendations provided by equipment vendor.

(6) Operating in accordance with the terms and conditions expressed in this permit neither authorizes the Permittee to violate any rules or regulations, nor create a nuisance or air pollution.

**MARYLAND DEPARTMENT OF THE ENVIRONMENT**

**AIR AND RADIATION ADMINISTRATION**

**SUPPLEMENTAL INFORMATION REFERENCES**

The Code of Maryland Regulations (COMAR) is searchable by COMAR citation at the following Division of State Documents website:
http://www.dsd.state.md.us/COMAR/ComarHome.html

The Code of Federal Regulations (CFR), including New Source Performance Standards (NSPS) at 40 CFR, Part 60 and National Emission Standards for Hazardous Air Pollutants (NESHAP) at 40 CFR, Parts 61 and 63, is searchable by CFR citation at the following U.S. Government Publishing Office website:
http://www.ecfr.gov

Information on National Ambient Air Quality Standards (NAAQS) is located at the following U.S. Environmental Protection Agency (EPA) website:
https://www.epa.gov/criteria-air-pollutants/naaqs-table

Information on Maryland's Ambient Air Monitoring Program is located at the following Maryland Department of the Environment website:
http://mde.maryland.gov/programs/Air/AirQualityMonitoring/Pages/index.aspx

Information on the U.S. EPA's Screen3 computer model and other EPA-approved air dispersion models is located at the following U.S. EPA website:
http://www.epa.gov/scram001/dispersion_screening.htm

Information on the U.S. EPA TANKS Emission Estimation Software is located at the following U.S. EPA website:
http://www.epa.gov/ttn/chief/software/tanks/index.html

Information on the U.S. EPA Emission Factors and AP-42 is located at the following U.S. EPA website:
https://www.epa.gov/air-emissions-factors-and-quantification/ap-42-compilation-air-emission-factors

Biofiltration: An Innovative Air Pollution Control Technology for VOC Emissions:
Gero Leson & Arthur M. Winer (1991). Biofiltration: An Innovation Air Pollution Control Technology for VOC Emissions, Journal of Air & Waste Management Association, 41:8, 1045-1054.
http://doi.org/10.1080/10473289.1991.10466898

Biofiltration: A Promising and Cost-Effective Control Technology for Odors, VOCs and air toxics:
Altaf H. Wani, Richard M.R. Branion & Anthony K. Lau (1997). Biofiltration: A Promising and Cost-Effective Control Technology for Odors, VOCs and air toxics
Gero Leson & Arthur M. Winer (1997). Biofiltration: An Innovation Air Pollution Control Technology for VOC Emissions, Journal of Environmental Science & Health Part A, 32:7, 2027-2055.
https://doi.org/10.1080/10934529709376664