MARYLAND DEPARTMENT OF THE ENVIRONMENT

AIR AND RADIATION ADMINISTRATION
APPLICATION FOR A PERMIT TO CONSTRUCT

DOCKET #04-23

COMPANY: Glen-Gery Corporation

LOCATION: Glen-Gery Corporation – Rocky Ridge Plant, 9801 Rocky Ridge Road, Rocky Ridge, MD 21778

APPLICATION: One (1) 175 ton per hour clay and shale crusher powered by electricity and controlled by a dust collector

ITEM	DESCRIPTION
1	Notice of Application and Opportunity to Request an Informational Meeting
2	Environmental Justice (EJ) Information - EJ Fact Sheet and MDE Score and Screening Report
3	Permit to Construct Application Forms – Form 5, Form 6, Form 5T, Form 5EP, emissions calculations, and vendor information.
4	Evidence of Zoning Approval

DEPARTMENT OF THE ENVIRONMENT
AIR AND RADIATION ADMINISTRATION

NOTICE OF APPLICATION AND OPPORTUNITY TO REQUEST AN INFORMATIONAL MEETING

The Maryland Department of the Environment, Air and Radiation Administration (ARA) received a permit-to-construct application from Glen-Gery Corporation on November 29, 2022, with an amendment on February 17, 2023, for one (1) 175 ton per hour clay and shale crusher powered by electricity and controlled by a dust collector. The proposed installation will be located at the Glen-Gery Corporation – Rocky Ridge Plant located at 9801 Rocky Ridge Road, Rocky Ridge, MD 21778.

In accordance with HB 1200/Ch. 588 of 2022, the applicant provided an environmental justice (EJ) Score for the census tract in which the project is located using the Maryland EJ mapping tool. The EJ Score, expressed as a statewide percentile, was shown to be 5.47 which the Department has verified. This score considers three demographic indicators – minority population above 50%, poverty rate above 25% and limited English proficiency above 15%.

Copies of the application, the EJ mapping tool screening report (which includes the score), and other supporting documents are available for public inspection on the Department's website at https://mde.maryland.gov/programs/Permits/AirManagementPermits/Pages/index.aspx (click on Docket Number 04-23). Any applicant-provided information regarding a description of the environmental and socioeconomic indicators contributing to that EJ score can also be found at the listed website. Such information has not yet been reviewed by the Department. A review of the submitted information will be conducted when the Department undertakes its technical review of all documents included in the application.

Pursuant to the Environment Article, Section 1-603, Annotated Code of Maryland, the Department will hold an informational meeting to discuss the application and the permit review process if the Department receives a written request for a meeting within 10 working days from the date of the second publication of this notice. A requested informational meeting will be held virtually using teleconference or internet-based conferencing technology unless a specific request for an in-person informational meeting is received. All requests for an informational meeting should be directed to the attention of Ms. Shannon Heafey, Air Quality Permits Program, Air and Radiation Administration, 1800 Washington Boulevard, Baltimore, Maryland 21230.

Further information may be obtained by calling Ms. Shannon Heafey at 410-537-4433.

Christopher R. Hoagland, Director
Air and Radiation Administration

Maryland Department of the Environment

The Applicant's Guide to Environmental Justice and Permitting

What You Need to Know

This fact sheet is designed to provide guidance to applicants on incorporating environmental justice screening requirements pursuant to House Bill 1200, effective October 1, 2022.

What is Environmental Justice?

The concept behind the term environmental justice (EJ) is that regardless of race, color, national origin, or income, all Maryland residents and communities should have an equal opportunity to enjoy an enhanced quality of life. How to assess whether equal protection is being applied is the challenge.

Communities surrounded by a disproportionate number of polluting facilities puts residents at a higher risk for health problems from environmental exposures. It is important that residents who may be adversely affected by a proposed source be aware of the current environmental issues in their community in order to have meaningful involvement in the permitting process. Resources may be available from government and private entities to ensure that community health is not negatively impacted by a new source located in the community.

Extensive research has documented that health disparities exist between demographic groups in the United States, such as differences in mortality and morbidity associated with factors that include race/ethnicity, income, and educational attainment. House Bill 1200 adds to MDE's work incorporating diversity, equity and inclusion into our mission to help overburdened and underserved communities with environmental issues.

What is House Bill 1200 and what does it require?

Effective October 1, 2022, House Bill 1200 requires a person applying for a permit from the Department under §1-601 of the Environment Article of the Annotated Code of Maryland or any permit requiring public notice and participation to include in the application an EJ Score for the census tract where the applicant is seeking the permit; requiring the Department, on receiving a certain permit application to review the EJ Score; and requiring notices to include information related to EJ Scores and generally relating to environmental permits and environmental justice screenings.

What is a "Maryland EJ Tool"?

The term "Maryland EJ Tool" means a publicly available state mapping tool that allows users to: (1) explore layers of environmental justice concern; (2) determine an overall EJ score for census tracts in the state; and (3) view additional context layers relevant to an area.

Maryland Department of the Environment

The Applicant's Guide to Environmental Justice and Permitting

What You Need to Know

What is an "EJ Score"?

The term "EJ Score" means an overall evaluation of an area's environment and environmental justice indicators, as defined by MDE in regulation, including: (1) pollution burden exposure; (2) pollution burden environmental effects; (3) sensitive populations; and (4) socioeconomic factors.

The Maryland EJ Screening Tool uses three demographic indicators – minority population above 50%, poverty rate above 25% and percent of the population having limited English proficiency above 15% - to calculate a score that can be used as an indicator of susceptibility to environmental exposure. It is that score, linked to the census tract where the project is to be located, that needs to be reported to MDE as part of your permit application.

What does the application require?

The link for the Maryland EJ Tool is located on the Department's website, www.mde.maryland.gov, under Quick Links as EJ Screening Tool. At the top right, please click the first button for the MDE Screening Report. Input the address of the proposed installation in the address bar. Click on the Report button. Once the report has been generated select the print icon.

The applicant needs to include the MDE Screening Report with the EJ Score from the Maryland EJ Tool as part of the permit application upon submission. An application will not be considered complete without the report.

The applicant is encouraged to provide the Department with a discussion about the environmental exposures in the community. This will provide pertinent information about how the applicant should proceed with engaging with the community. Residents of a community with a high indicator score and a high degree of environmental exposure should be afforded broader opportunities to participate in the permit process and understand the impacts a project seeking permit approval may have on them.

Questions

For air quality permits, please call 410-537-3230.
For water permits, please call 410-537-4145.
For land permits pertaining to Solid Waste, please call 410-537-3098.
For land permits pertaining to Oil Control, please call 410-537-3483.
For land permits pertaining to Animal Feeding Operations, please call 410-537-4423.
For land permits pertaining to Biosolids, please call 410-537-3403.

Glen-Gery Corp. - Rocky Ridge MDE EJ Screening Report

Area of Interest (AOI) Information

Nov 15 2022 15:42:47 Eastern Standard Time

Summary

Name	Count	Area(ft²)	Length(ft)
EJ Scores as a Percent Distribution (Quantile Representation)	1	N/A	N/A
Active High Air Emission Facilities	0	N/A	N/A
LRP Facilities	0	N/A	N/A
Maryland Dam Locations	0	N/A	N/A
Maryland Pond Locations	0	N/A	N/A
Wastewater Discharge Facilities	0	N/A	N/A
Historic Mine Locations	0	N/A	N/A
Significant Wastewater Treatment Plants	0	N/A	N/A
Point Source Discharges	0	N/A	N/A
All Permitted Solid Waste Acceptance Facilities	0	N/A	N/A
Municipal Solid Waste Acceptance Facilities	0	N/A	N/A

EJ Scores as a Percent Distribution (Quantile Representation)

#	Geographic Area Name	Percent Minority	Percent Poverty	Percent_Limited_English_Proficiency	SocioScore Percent Tract Only	Socio Percentile (All MD)	Socio Percentile (All MD) %	Area(ft²)
1	Census Tract 7675, Frederick County, Maryland	1.70	15.19	0.00	5.63	5.47	5.4715%	N/A

© MDE

Technical Services
433 S. Pottsville Pike
Shoemakersville, PA 19555

(p) (610) 562-3076
(f) (610) 562-2084

November 29, 2022

Maryland Department of the Environment
Air Quality Permits Program
Air & Radiation Administration
1800 Washington Blvd.
Baltimore, MD 21230

RE: Glen-Gery Corporation
Rocky Ridge Plant
Proposed Primary Crusher Installation w/ Baghouse

To Whom It May Concern:

The Glen-Gery Corporation's Rocky Ridge manufacturing facility located in Rocky Ridge, MD is proposing the installation of a new enclosed primary crusher and associated baghouse. The Rocky Ridge Plant has been inactive since 2017 when formerly operated by Redland Brick, Inc. Previous primary crushing was done in the quarry with the use of a portable crusher and dump trucks. The aim of this project is to provide a safer work site as well as a more efficient crushing operation. The scope of this project includes the addition of a Steadman Mega-Slam 4260 primary crusher and associated 7800 CFM Donaldson TORIT oval-cartridge dust collector. A building addition will also be in the scope of the project to house the primary crusher. The new dust collection unit will be utilized to control particulate emissions at the inlet and outlet of the new crusher and will be designed as a "closed system" while exhausting back inside the newly constructed crusher building. The previous portable crushing operation did not operate with dust collection equipment. The proposed "closed system" will not exhaust into atmosphere at a stack point location.

The following attachments are reference below. If you have any other questions or require any additional information, please contact me at (610) 562-6420.

Attachment A – Application Forms 5, 5T, 5EP, & 6
Attachment B – Manufacturer Specifications
Attachment C – Workman's Compensation Insurance
Attachment D – Process Flow Diagrams
Attachment E – Site Plan of Proposed Crusher
Attachment F – Emission Calculations
Attachment G – SDS of Raw Materials

Sincerely,
Glen-Gery Corporation

Eric Brown
Environmental Specialist

Enclosure
cc: Mike Krzyzanowski, Glen-Gery Corporation
John Vrobel, Glen-Gery Corporation
Sarah Wells, MDE

Attachment A

AIR QUALITY PERMIT TO CONSTRUCT

APPLICATION CHECKLIST

OWNER OF EQUIPMENT/PROCESS	
COMPANY NAME:	Glen-Gery Corporation
COMPANY ADDRESS:	433 S. Pottsville Pike, Shoemakersville, PA 19555
LOCATION OF EQUIPMENT/PROCESS	
PREMISES NAME:	Glen-Gery Corporation - Rocky Ridge Plant
PREMISES ADDRESS:	9801 Rocky Ridge Rd., Rocky Ridge, MD 21778
CONTACT INFORMATION FOR THIS PERMIT APPLICATION	
CONTACT NAME:	Eric Brown
JOB TITLE:	Environmental Specialist
PHONE NUMBER:	(610) 562-6420
EMAIL ADDRESS:	eric.brown@glengery.com
DESCRIPTION OF EQUIPMENT OR PROCESS	
Installation of an enclosed stationary crusher (Stedman Mega-Slam 4260) w/ 7800 CFM Donaldson TORIT Dust Collector.	

Application is hereby made to the Department of the Environment for a Permit to Construct for the following equipment or process as required by the State of Maryland Air Quality Regulation, COMAR 26.11.02.09.

Check each item that you have submitted as part of your application package.

- [x] Application package cover letter describing the proposed project
- [x] Complete application forms (Note the number of forms included or NA if not applicable.)

No. x	Form 5	No. ____	Form 11
No. x	Form 5T	No. ____	Form 41
No. x	Form 5EP	No. ____	Form 42
No. x	Form 6	No. ____	Form 44
No. ____	Form 10		

- [x] Vendor/manufacturer specifications/guarantees
- [x] Evidence of Workman's Compensation Insurance
- [x] Process flow diagrams with emission points
- [x] Site plan including the location of the proposed source and property boundary
- [x] Material balance data and all emissions calculations
- [x] Material Safety Data Sheets (MSDS) or equivalent information for materials processed and manufactured.
- [ ] Certificate of Public Convenience and Necessity (CPCN) waiver documentation from the Public Service Commission (1)
- [ ] Documentation that the proposed installation complies with local zoning and land use requirements (2)
- [x] Environmental Justice (EJ) Score Report (2)

The EJ Score is an overall evaluation of an area's environment and existing environmental justice indicators including pollution burden exposure, pollution burden environmental effects, sensitive populations, and socioeconomic factors. Provide the EJ Score results from the use of a Maryland EJ Tool for the census tract where an applicant is seeking a permit.

The EJ Score can be generated using the MDE's EJ Screening Tool at:
https://mdewin64.mde.state.md.us/EJ/
Save the Screening Report utilized to develop the EJ Score and attach it to your application.

Enter overall EJ Score here: 5.47%

(1) Required for emergency and non-emergency generators installed on or after October 1, 2001 and rated at 2001 kW or more.

(2) Required for applications subject to Expanded Public Participation Requirements under Maryland Environment Article §1-601.

MARYLAND DEPARTMENT OF THE ENVIRONMENT
Air and Radiation Management Administration ▪ Air Quality Permits Program
1800 Washington Blvd ▪ Baltimore, Maryland 21230
(410) 537-3230 ▪ 1-800-633-6101 ▪ www.mde.state.md.us

APPLICATION FOR FUEL BURNING EQUIPMENT

Information Regarding Public Outreach

For Air Quality Permit to Construct applications subject to public review, applicants should consider the following information in the initial stages of preparing a permit application.

If you are not sure at the time you are applying for a permit whether public review of your application is required or for information on steps you can take to engage the surrounding community where your planned project will be located, please contact the Air Quality Permits Program at 410-537-3225 and seek their advice.

Communicating and engaging the local community as early as possible in your planning and development process is an important aspect of your project and should be considered a priority. Environmental Justice or "EJ" is a movement to inform, involve, and engage communities impacted by potential and planned environmental projects by affording citizens opportunities to learn about projects and discuss any concerns regarding impacts.

Although some permit applications are subject to a formal public review process prescribed by statute, the Department strongly encourages you to engage neighboring communities separate from and well ahead of the formal permitting process. Sharing your plans by way of community meetings, informational outreach at local gatherings or through local faith-based organizations can initiate a rewarding and productive dialogue that will reduce anxiety and establish a permanent link with your neighbors in the community.

All parties benefit when there is good communication. The Department can assist applicants in developing an outreach plan that fits the needs of both the company and the public.

MARYLAND DEPARTMENT OF THE ENVIRONMENT

1800 Washington Blvd ▪ Baltimore, Maryland 21230
(410) 537-3230 ▪1-800-633-6101 ▪ www.mde.state.md.us

Air and Radiation Management Administration ▪ Air Quality Permits Program

APPLICATION FOR PROCESSING / MANUFACTURING EQUIPMENT

Permit to Construct ☒ Registration Update ❑ Initial Registration ❑

1A. Owner of Equipment/Company Name

Glen-Gery Corporation

Mailing Address

433 S. Pottsville Pike
Street Address

Shoemakersville | PA | 19555
City | State | Zip

Telephone Number

(610) 562-6420

Signature

John Vrobel, Vice President
Print Name and Title

11/29/2022
Date

DO NOT WRITE IN THIS BLOCK
2. REGISTRATION NUMBER

County No. (1-2) | Premises No. (3-6)
Registration Class (7) | Equipment No. (8-11)
Data Year (12-13) | Application Date

1B. Equipment Location and Telephone Number (if different from above)

9801 Rocky Ridge Road
Street Number and Street Name

Rocky Ridge | MD | 21778 | (610) 562-6420
City/Town | State | Zip | Telephone Number

Glen-Gery Corporation - Rocky Ridge Plant
Premises Name (if different from above)

3. Status (A= New, B= Modification to Existing Equipment, C= Existing Equipment)

Status (15)	New Construction Begun (MM/YY) (16-19)	New Construction Completed (MM/YY) (20-23)	Existing Initial Operation (MM/YY) (20-23)
A	1 2 2 2	0 3 2 3	

4. Describe this Equipment: Make, Model, Features, Manufacturer (include Maximum Hourly Input Rate, etc.)
Stedman Mega-Slam 4260 with a 200hp motor. Throughput capacity is rated for 167 ton/hr for 5" material.

5. Workmen's Compensation Coverage #9M213483 (Binder/Policy Number) 7/31/2023 (Expiration Date)

Company Travelers Insurance

NOTE: Before a Permit to Construct may be issued by the Department, the applicant must provide the Department with proof of worker's compensation coverage as required under Section 1-202 of the Worker's Compensation Act.

6A. Number of Pieces of Identical Equipment Units to be Registered/Permitted at this Time 2

6B. Number of Stack/Emission Points Associated with this Equipment 0

7. Person Installing this Equipment (if different from Number 1 on Page 1)

Name Direxa, LLC Title

Company Direxa, LLC

Mailing Address/Street 3609 S. Wadsworth Blvd., #370

City/Town Lakewood State CO, 80235 Telephone (720) 263-5685

8. Major Activity, Product or Service of Company at this Location

Brick Manufacturing with associated equipment relate to crushing, grinding, & screening.

9. Control Devices Associated with this Equipment

None [ ] 24-0

Simple/Multiple Cyclone	Spray/Adsorb Tower	Venturi Scrubber	Carbon Adsorber	Electrostatic Precipitator	Baghouse	Thermal/Catalytic Afterburner	Dry Scrubber
[ ]	[ ]	[ ]	[ ]	[ ]	[X]	[ ]	[ ]
24-1	24-2	24-3	24-4	24-5	24-6	24-7	24-8

Other

[ ] Describe

24-9

10. Annual Fuel Consumption for this Equipment

OIL-1000 GALLONS	SULFUR %	GRADE	NATURAL GAS-1000 FT^3	LP GAS-100 GALLONS	GRADE
26-31	32-33	34	35-41	42-45	

COAL- TONS	SULFUR %	ASH%	WOOD-TONS	MOISTURE %
46-52	53-55	56-58	59-63	64-65

OTHER FUELS [ ] ANNUAL AMOUNT CONSUMED OTHER FUEL [ ] ANNUAL AMOUNT CONSUMED

(Specify Type) 66-1 (Specify Units of Measure) (Specify Type) 66-2 (Specify Units of Measure)

1= Coke 2= COG 3=BFG 4=Other

11. Operating Schedule (for this Equipment)

Continuous Operation	Batch Process	Hours per Batch	Batch per Week	Hours per Day	Days Per Week	Days per Year
[X]	[ ]	[ ][ ]	[ ]	[ ][ ]	[ ]	[ ][ ][ ]
67-1	67-2	68-69		70-71	72	73-75

Seasonal Variation in Operation:

No Variation	Winter Percent	Spring Percent	Summer Percent	Fall Percent	(Total Seasons= 100%)
[X]	[ ][ ]	[ ][ ]	[ ][ ]	[ ][ ]	
76	77-78	79-80	81-82	83-84	

12. Equivalent Stack Innformation- is Exhaust through Doors, Windows, etc. Only? (Y/N) Y

85

If not, then

Height Avove Ground (FT)	Inside Diameter at Top	Exit Temperature (ºF)	Exit Velocity (FT/SEC)
86-88	89-91	92-95	96-98

NOTE:
Attach a block diagram of process/process line, indicating new equipment as reported on this form and all existing equipment, including control devices and emission points.

13. Input Materials (for this equipment only)
Is any of this data to be considered confidential? N (Y or N)

NAME	CAS NO. (IF APPLICABLE)	INPUT RATE PER HOUR	UNITS	PER YEAR	UNITS
1. Shale	N/A	5.91	tons	51,815	tons
2. Clay	1302-87-0	5.91	tons	51,815	tons
3.					
4.					
5.					
6.					
7.					
8.					
9.					
TOTAL					

14. Output Materials (for this equipment)
Process/Product Stream

NAME	CAS NO. (IF APPLICABLE)	OUTPUT RATE PER HOUR	UNITS	PER YEAR	UNITS
1. Shale	N/A	5.91	tons	51,815	tons
2. Clay	1302-87-0	5.91	tons	51,815	tons
3.					
4.					
5.					
6.					
7.					
8.					
9.					
TOTAL					

15. Waste Streams- Solid and Liquid

NAME	CAS NO. (IF APPLICABLE)	OUTPUT RATE PER HOUR	UNITS	PER YEAR	UNITS
1. N/A					
2.					
3.					
4.					
5.					
6.					
7.					
8.					
9.					
TOTAL					

16. Total Stack Emissions (for this equipment only) in Pounds Per Operating Day

Particulate Matter	Oxides of Sulfur	Oxides of Nitrogen
See attached calculations	0	0
99-104	105-110	111-116

Carbon Monoxide	Volatile Organic Compounds	PM-10
0	0	See attached calculations
177-122	123-128	129-134

17. Total Fugitive Emissions (for this equipment only) in Pounds Per Operating Day

Particulate Matter	Oxides of Sulfur	Oxides of Nitrogen
See attached calculations	0	0
135-139	140-144	145-149

Carbon Monoxide	Volatile Organic Compounds	PM-10
0	0	See attached calculations
150-154	155-159	160-164

Method Used to Determine Emissions **(1= Estimate 2= Emission Factor 3= Stack Test 4= Other)**

TSP	SOX	NOX	CO	VOC	PM10
					2
165	166	167	168	169	170

AIR AND RADIATION MANAGEMENT ADMINISTRATION USE ONLY

18. Date Rec'd. Local _____ **Date Rec'd. State** _____ **Return to Local Jurisdiction** **Date**_____ **By**_____

Reviewed by Local Jurisdiction Date_____ By_____ **Reviewed by State** Date_____ By_____

19. Inventory Date **Month/Year** (171-174) **Equipment Code** (175-177) **SCC Code** (178-185)

20. Annual Operating Rate (186-192) **Maximum Design Hourly Rate** (193-199) **Permit to Operate Month** (200-201) **Transaction Date (MM/DD/YR)** (202-207)

Staff Code (208-210) **VOC Code** (211 212) **SIP Code** (213 214) **Regulation Code** (215-218) **Confidentiality** (219)

Point Description (220-238) **Action** (239) A: Add C: Change

MARYLAND DEPARTMENT OF THE ENVIRONMENT
Air and Radiation Management Administration ● Air Quality Permits Program
1800 Washington Boulevard ● Baltimore, Maryland 21230
(410)537-3225 ● 1-800-633-6101● www.mde.maryland.gov

FORM 5EP: Emission Point Data

Complete one (1) Form 5EP for EACH emission point (stack or fugitive emissions) related to the proposed installation.

Applicant Name: Glen-Gery Corporation

1. Emission Point Identification Name/Number

List the applicant assigned name/number for this emission point and use this value on the attached required plot plan:
N/A

2. Emission Point Description

Describe the emission point including all associated equipment and control devices:
Stedman Mega-Slam 4260 primary crusher w/ 7800 CFM Donaldson Baghouse

3. Emissions Schedule for the Emission Point

Continuous or Intermittent (C/I)?	C	**Seasonal Variation** Check box if none: ☒ Otherwise estimate seasonal variation:	
Minutes per hour:	60	Winter Percent	
Hours per day:	24	Spring Percent	
Days per week:	7	Summer Percent	
Weeks per year:	52	Fall Percent	

4. Emission Point Information

Height above ground (ft):	~30ft	Length and width dimensions at top of rectangular stack (ft):	Length: N/A	Width:	
Height above structures (ft):	N/A				
Exit temperature (ºF):	Ambient	Inside diameter at top of round stack (ft):		N/A	
Exit velocity (ft/min): ~7800 CFM		Distance from emission point to nearest property line (ft):		N/A	
Exhaust gas volumetric flow rate (acfm):	N/A	Building dimensions if emission point is located on building (ft)	Height ~30ft	Length ~25ft	Width ~20ft

5. Control Devices Associated with the Emission Point

Identify each control device associated with the emission point and indicate the number of devices. ***A Form 6 is also required for each control device***. If none check none:

- ☐ None
- ☒ Baghouse No. _____
- ☐ Cyclone No. _____
- ☐ Elec. Precipitator (ESP) No. _____
- ☐ Dust Suppression System No. _____
- ☐ Venturi Scrubber No. _____
- ☐ Spray Tower/Packed Bed No. _____
- ☐ Carbon Adsorber No. _____
  - ☐ Cartridge/Canister
  - ☐ Regenerative
- ☐ Thermal Oxidizer No. _____
  - ☐ Regenerative
- ☐ Catalytic Oxidizer No. _____
- ☐ Nitrogen Oxides Reduction No. _____
  - ☐ Selective ☐ Non-Selective
  - ☐ Catalytic ☐ Non-Catalytic
- ☐ Other No. _____
  Specify:

FORM 5EP: Emission Point Data

6. Estimated Emissions from the Emission Point

Criteria Pollutants	At Design Capacity (lb/hr)	At Projected Operations		
		(lb/hr)	(lb/day)	(ton/yr)
Particulate Matter (filterable as PM10)	0.103	0.007	0.168	0.031
Particulate Matter (filterable as PM2.5)	0.103	0.007	0.168	0.031
Particulate Matter (condensables)	0	0	0	0
Volatile Organic Compounds (VOC)	0	0	0	0
Oxides of Sulfur (SOx)	0	0	0	0
Oxides of Nitrogen (NOx)	0	0	0	0
Carbon Monoxide (CO)	0	0	0	0
Lead (Pb)	0	0	0	0
Greenhouse Gases (GHG)	**At Design Capacity (lb/hr)**	**At Projected Operations**		
		(lb/hr)	**(lb/day)**	**(ton/yr)**
Carbon Dioxide (CO_2)	0	0	0	0
Methane (CH_4)	0	0	0	0
Nitrous Oxide (N_2O)	0	0	0	0
Hydrofluorocarbons (HFCs)	0	0	0	0
Perfluorocarbons (PFCs)	0	0	0	0
Sulfur Hexafluoride (SF6)	0	0	0	0
Total GHG (as CO_2e)	0	0	0	00
List individual federal Hazardous Air Pollutants (HAP) below:	**At Design Capacity (lb/hr)**	**At Projected Operations**		
		(lb/hr)	**(lb/day)**	**(ton/yr)**
N/A	N/A	N/A	N/A	N/A

(Attach additional sheets as necessary.)

MARYLAND DEPARTMENT OF THE ENVIRONMENT
Air and Radiation Management Administration • Air Quality Permits Program
1800 Washington Boulevard • Baltimore, Maryland 21230
(410)537-3225 • 1-800-633-6101• www.mde.maryland.gov

FORM 5T: Toxic Air Pollutant (TAP) Emissions Summary and Compliance Demonstration

Applicant Name: Glen-Gery Corporation

Step 1: Quantify premises-wide emissions of Toxic Air Pollutants (TAP) from new and existing installations in accordance with COMAR 26.11.15.04. Attach supporting documentation as necessary.

Toxic Air Pollutant (TAP)	CAS Number	Class I or Class II?	Screening Levels (µg/m³)			Estimated Premises Wide Emissions of TAP			
						Actual Total Existing TAP Emissions	Projected TAP Emissions from Proposed Installation	Premises Wide Total TAP Emissions	
			1-hour	8-hour	Annual	(lb/hr)	(lb/hr)	(lb/hr)	(lb/yr)
ex. ethanol	*64175*	*II*	*18843*	*3769*	*N/A*	*0.60*	*0.15*	*0.75*	*1500*
ex. benzene	*71432*	*I*	*80*	*16*	*0.13*	*0.5*	*0.75*	*1.00*	*400*
See attached air emission calculation	N/A	N/A	N/A	N/A	N/A	N/A	N/A	N/A	N/A

(attach additional sheets as necessary.)

Note: Screening levels can be obtained from the Department's website (http://www.mde.maryland.gov) or by calling the Department.

Step 2: Determine which TAPs are exempt from further review. A TAP that meets either of the following Class I or Class II small quantity emitter exemptions is exempt from further TAP compliance demonstration requirements under Step 3 and Step 4.

Class II TAP Small Quantity Emitter Exemption Requirements (COMAR 26.11.15.03B(3)(a))
A Class II TAP is exempt from Step 3 and Step 4 if the Class II TAP meets the following requirements: Premises wide emissions of the TAP shall not exceed 0.5 pounds per hour, and any applicable 1-hour or 8-hour screening level for the TAP must be greater than 200 µg/m³.

Class I TAP Small Quantity Emitter Exemption Requirements (COMAR 26.11.15.03B(3)(b))
A Class I TAP is exempt from Step 3 and Step 4 if the Class I TAP meets the following requirements: Premises wide emissions of the TAP shall not exceed 0.5 pounds per hour and 350 pounds per year, any applicable 1-hour or 8-hour screening level for the TAP must be greater than 200 µg/m³, and any applicable annual screening level for the TAP must be greater than 1 µg/m³.

If a TAP meets either the Class I or Class II TAP Small Quantity Emitter Exemption Requirements, no further review under Step 3 and Step 4 are required for that specific TAP.

FORM 5T: Toxic Air Pollutant (TAP) Emissions Summary and Compliance Demonstration

Step 3: Best Available Control Technology for Toxics Requirement (T-BACT, COMAR 26.11.15.05)
In the following table, list all TAP emission reduction options considered when determining T-BACT for the proposed installation. The options should be listed in order beginning with the most effective control strategy to the least effective strategy. Attach supporting documentation as necessary.

Target Pollutants	Emission Control Option	% Emission Reduction	Costs		T-BACT Option Selected? (yes/no)
			Capital	Annual Operating	
ex. ethanol and benzene	*Thermal Oxidizer*	*99*	*$50,000*	*$100,000*	*no*
ex. ethanol and benzene	*Low VOC materials*	*80*	*0*	*$100.000*	*yes*

(attach additional sheets as necessary)

Step 4: Demonstrating Compliance with the Ambient Impact Requirement (COMAR 26.11.15.06)
Each TAP not exempt in Step 2 must be individually evaluated to determine that the emissions of the TAP will not adversely impact public health. The evaluation consists of a series of increasingly non-conservative (and increasingly rigorous) tests. Once a TAP passes a test in the evaluation, no further analysis is required for that TAP. "Demonstrating Compliance with the Ambient Impact Requirement under the Toxic Air Pollutant (TAP) Regulations (COMAR 26.11.15.06)" provides guidance on conducting the evaluation. Summarize your results in the following table. Attach supporting documentation as necessary.

Toxic Air Pollutant (TAP)	CAS Number	Screening Levels ($\mu g/m^3$)			Premises Wide Total TAP Emissions		Allowable Emissions Rate (AER) per COMAR 26.11.16.02A		Off-site Concentrations per Screening Analysis ($\mu g/m^3$)			Compliance Method Used?
		1-hour	8-hour	Annual	(lb/hr)	(lb/yr)	(lb/hr)	(lb/yr)	1-hour	8-hour	Annual	AER or Screen
ex. ethanol	*64175*	*18843*	*3769*	*N/A*	*0.75*	*1500*	*0.89*	*N/A*	*N/A*	*N/A*	*N/A*	*AER*
ex. benzene	*71432*	*80*	*16*	*0.13*	*1.00*	*400*	*0.04*	*36.52*	*1.5*	*1.05*	*0.12*	*Screen*

(attach additional sheets as necessary)

If compliance with the ambient impact requirement cannot be met using the allowable emissions rate method or the screening analysis method, refined dispersion modeling techniques may be required. Please consult with the Department's Air Quality Permit Program prior to conducting dispersion modeling methods to demonstrate compliance.

MARYLAND DEPARTMENT OF THE ENVIRONMENT

1800 Washington Blvd ▪ Baltimore, Maryland 21230
(410) 537-3230 ▪ 1-800-633-6101 ▪ www.mde.state.md.us

Air and Radiation Management Administration ▪ Air Quality Permits Program

Application for Permit to Construct
Gas Cleaning or Emission Control Equipment

1. Owner of Installation Glen-Gery Corporation	**Telephone No.** 610-562-6420		**Date of Application** 11/29/2022
2. Mailing Address 433 S Pottsville Pike	**City** Shoemakersville	**Zip Code** 19555	**County** Berks
3. Equipment Location 9801 Rocky Ridge Road	**City/Town or P.O.** Rocky Ridge		**County** Frederick
4. Signature of Owner or Operator	**Title** Vice President		**Print or Type Name** John Vrobel

5. Application Type: **Alteration** ☐ **New Construction** ☒ X

6. Date Construction is to Start: 12/15/2022

Completion Date (Estimate): March of 2023

7. Type of Gas Cleaning or Emission Control Equipment:

Simple Cyclone ☐ **Multiple Cyclone** ☐ **Afterburner** ☐ **Electrostatic Precipitator** ☐

Scrubber ☐ _____ (type) **Other** ☒ X Baghouse (type)

8. Gas Cleaning Equipment Manufacturer	**Model No.**	**Collection Efficiency (Design Criteria)**
Torit, Donaldson	DF03-18	~90%

9. Type of Equipment which Control Equipment is to Service:

Primary Crusher (Steadman Mega-Slam MS-4260)

10. Stack Test to be Conducted:

Yes ☐ **No** ☒ X _____ (Stack Test to be Conducted By) _____ (Date)

11. Cost of Equipment N/A - equipment coming from a former plant.

Estimated Erection Cost $3.5 million

12. The Following Shall Be Design Criteria:

*See attachment B for specs.

	INLET		OUTLET	
Gas Flow Rate	_____	ACFM*	_____	ACFM*
Gas Temperature	_____	°F	_____	°F
Gas Pressure	_____	INCHES W.G.	_____	INCHES W.G.

PRESSURE DROP _____

Dust Loading	_____	GRAINS/ACFD**	_____	GRAINS/ACFD**
Moisture Content OR	_____	%	_____	%
Wet Bulb Temperature	_____	°F	_____	°F
Liquid Flow Rate (Wet Scrubber)	_____	GALLONS/MINUTE		

(WHEN SCRUBBER LIQUID OTHER THAN WATER INDICATE COMPOSITION OF SCRUBBING MEDIUM IN WEIGHT %)

*= ACTUAL CUBIC FEET PER MINUTE **= ACTUAL CUBIC FEET DRY

WHEN APPLICATION INVOLVES THE REDUCTION OF GASEOUS POLLUTANTS, PROVIDE THE CONCENTRATION OF EACH POLLUTANT IN THE GAS STREAM IN VOLUME PERCENT. INCLUDE THE COMPOSITION OF THE GASES ENTERING THE CLEANING DEVICE AND THE COMPOSITION OF EXHAUSTED GASES BEING DISCHARGED INTO THE ATMOSPHERE. USE AVAILABLE SPACE IN ITEM 15 ON PAGE 3.

13. Particle Size Analysis

Size of Dust Particles Entering Cleaning Unit	% of Total Dust	% to be Collected
0 to 10 Microns	33	90
10 to 44 Microns	33	90
Larger than 44 Microns	33	90

14. For Afterburner Construction Only:

Volume of Contaminated Air _____ CFM (DO NOT INCLUDE COMBUSTION AIR)

Gas Inlet Temperature _____ °F

Capacity of Afterburner _____ BTU/HR

Diameter (or area) of Afterburner Throat_____

Combustion Chamber_____ _____ Operating Temperature at Afterburner _____ °F
(diameter) (length)

Retention Time of Gases _____

15. Show Location of Dust Cleaning Equipment in the System. Draw or Sketch Flow Diagram Showing Emission Path from Source to Exhaust Point to Atmosphere.

A flow diagram is included as Attachment D.

Date Received: Local _____ _____ **State** _____

Acknowledgement Date: _____

By _____

Reviewed By:

Local _____

State _____

Returned to Local:

Date_____

By _____

Application Returned to Applicant:

Date_____

By _____

REGISTRATION NUMBER OF ASSOCIATED EQUIPMENT: ☐ ☐☐☐☐

PREMISES NUMBER: ☐☐ ☐☐☐☐

Emission Calculations Revised By _____ **Date** _____

Attachment B

Donaldson®
Torit®

DOWNFLO® OVAL DUST COLLECTORS

ULTRA-WEB®

High Efficiency **Fine Fiber Filters** Built to Last

NOW AVAILABLE WITH
iCue™
CONNECTED FILTRATION SERVICES

A FAMILY OF OVER-ACHIEVERS

The high performance Downflo® Oval (DFO) family of over-achieving dust collectors provides up to 25 percent more filtration capacity than other same-sized cartridge collectors. Powered by proprietary Ultra-Web® fine fiber filtration technology, DFO delivers cleaner air, up to two times longer filter life, and greater cost savings.

The DFO advantage is found in the collector's proprietary design and components. The combination of a new cabinet design that greatly lowers cabinet velocities, proprietary Extra-Life™ cleaning technology, and proven Ultra-Web fine fiber filters allows more airflow through the collector without increasing the size of the footprint or damaging the filters.

A smaller collector helps lower the initial purchase price, reduces filter replacement costs and opens up valuable manufacturing floor space.

DFO OFFERS:

- Lower initial cost per cubic foot of air per minute
- Higher efficiency—cleaner air
- Lower pressure drop— greater energy savings
- Fewer filter changeouts
- Reduced filter disposal cost
- Easy system setup
- Less maintenance
- 10-year warranty

25%
MORE CAPACITY

DFO 3-18

iCUE™ CONNECTED FILTRATION SERVICE

Now available with the option of Donaldson's iCue connected filtration service, an IoT enabled service designed to prompt timely maintenance, helping improve production uptime and reduce operating costs.

OUTPERFORMS ALL OTHER COLLECTORS

DFO collectors offer some strong benefits that distinguish them from all other collectors available in the market today.

EASY TO USE

Quick-release handles provide easy cover removal and faster filter access

COMPACT

Smaller footprints for applications that require maximum cleaning efficiency in even smaller spaces

POWERFUL

DFO collectors provide 25 percent more capacity than same-sized dust collectors

COST EFFECTIVE

The proprietary ExtraLife™ Filter Cleaning System averages up to 30 percent increase in pulse cleaning energy for unmatched cleaning ability

INNOVATIVE

Unique oval-shaped Ultra-Web® cartridge filters provide the longest filter life and highest filtration efficiency—which lowers cost

DFO 2-4

DFO 3-3

SIZES & OPERATIONS

DFO MODELS 1-1, 2-2 AND 3-3

- Incorporate several exclusive and unique features
- Completely self-contained, "plug-and-play" type units
- Packaged with power pack, controls, silencer, damper, dust container and more
- Remarkably quiet operation
- Exceptionally compact design
- Easily movable through standard aisles and doorways

NORMAL OPERATIONS FOR MODELS 1-1, 2-2 AND 3-3

DFO 1-1

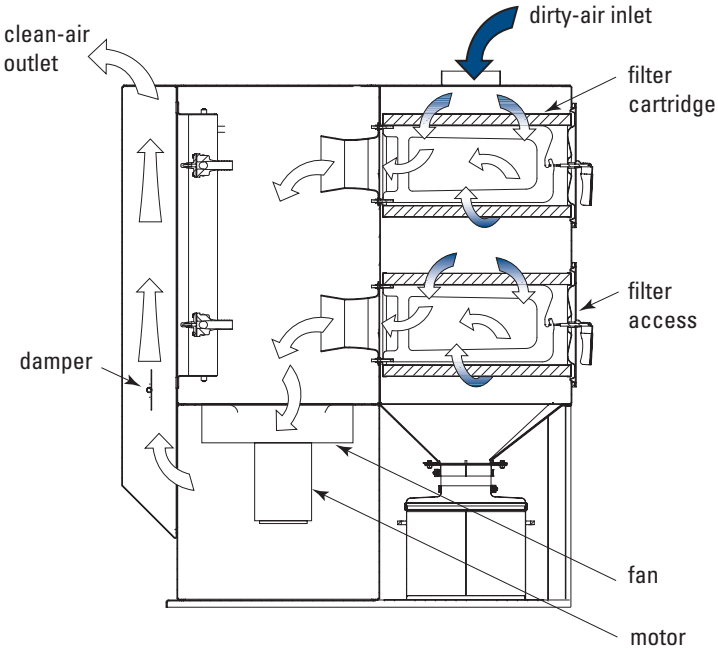

DFO MODELS 2-4 TO 4-128

- 23 standard model sizes
- Customized sizes available
- Many options and accessories
- Exceptionally compact design
- Significant energy savings

NORMAL OPERATIONS FOR MODELS 2-4 TO 4-128

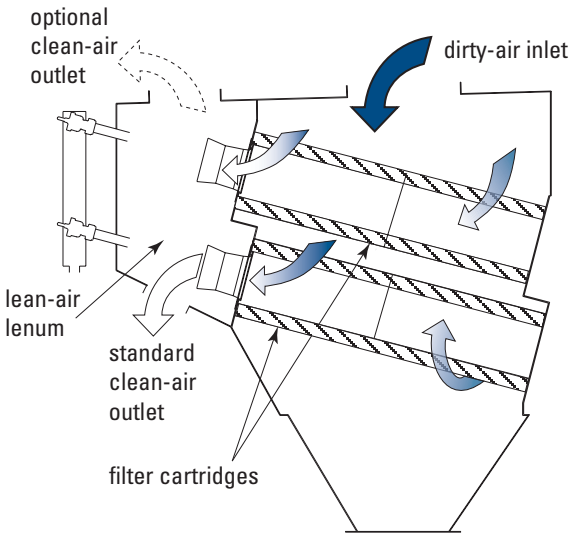

SIMPLY THE BEST

CARTRIDGE COLLECTORS AVAILABLE

CARTRIDGE FILTER TECHNOLOGY

HIGH PERFORMANCE FILTERS

The Downflo Oval filter design is another indication of Donaldson Torit's commitment to technical research and development. The distinguishing factor in our filters is Ultra-Web® filtration technology. Ultra-Web fine fiber media uses a layer of fibers 0.2 to 0.3 microns in diameter to capture contaminants on the surface of the media less than one micron in size. The resulting dust cake is easily cleaned off during the automated collector cleaning cycles providing cleaner air longer, with a minimum MERV* 15 efficiency rating based on ASHRAE 52.2 - 2007 test standards.

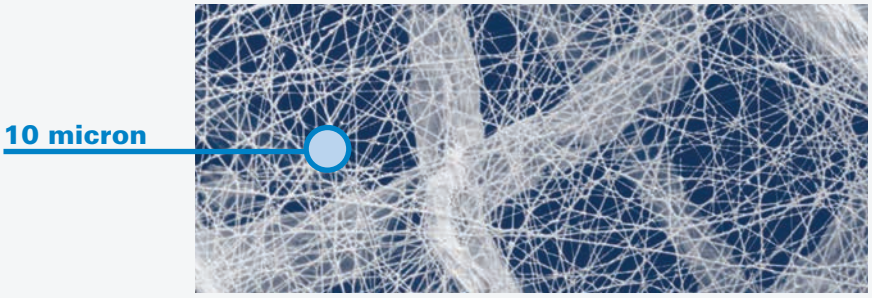

Fine Fiber Media
(600x)
Fine fiber surface loading technology is available in all Ultra-Web and Fibra-Web filter cartridges.

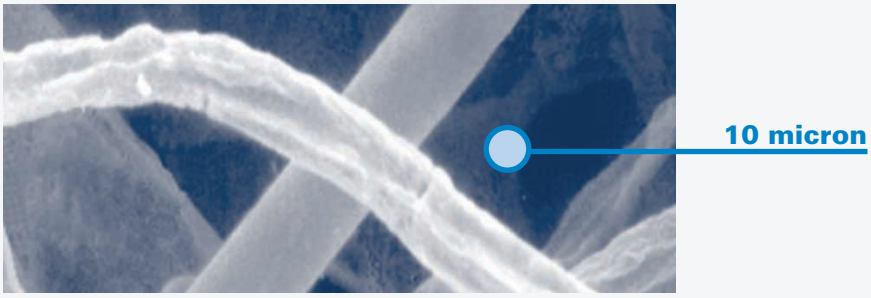

Commodity Filter Media
(600x)
Conventional media has spaces of up to 60 µm between fibers, allowing dust to become deeply embedded.

CARTRIDGE FILTERS FOR MANY APPLICATIONS

The Downflo WorkStation (DWS) in conjunction with Donaldson Torit's unique oval-shaped filter cartridges are an unbeatable system. Choose from our superior line of filters to complete the most powerful filtration solution available for your application.

MORE AIRFLOW, LESS FILTER MEDIA

UNIQUE OVAL SHAPE CONTRIBUTES TO HIGHER AIRFLOW CAPACITY

The Downflo Oval filter design is a reflection of Donaldson Torit's commitment to technical research and development. High performance oval-shaped filters handle up to 25 percent more airflow without increasing velocities, which can cause filter abrasion. Sophisticated FLUENT®*Airflow Modeling Software revealed that oval-shaped cartridge filters have fewer areas of high velocity, resulting in a lower potential for media abrasion and increased filter life.

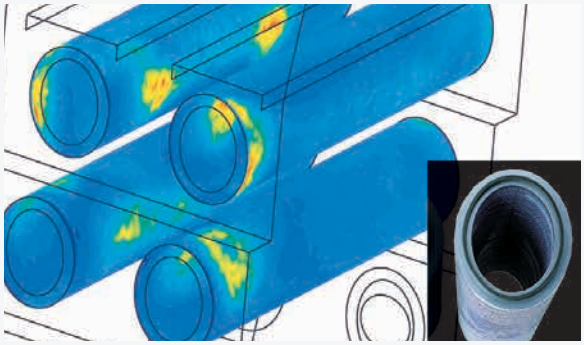

Downflo Oval Collector
9145 cfm (15,534 m^3/h)

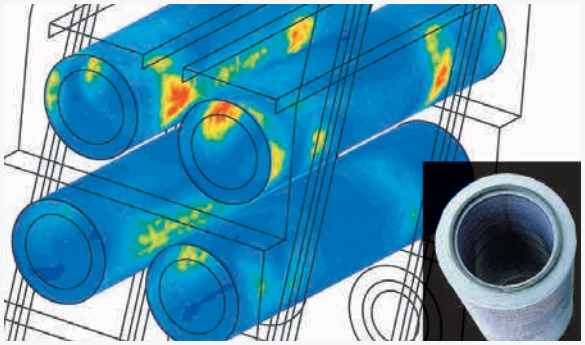

Standard Collector
7315 cfm (12,426 m^3/h)

AIRFLOW BREAKTHROUGHS LEAD TO HIGHER FILTRATION EFFICIENCY

Sophisticated computer modeling for fluid dynamics, structural mechanics and acoustics puts DFO models 1-1, 2-2, and 3-3 in a technical class all their own. The illustration below (left) shows how FLUENT Flow Modeling Software enhanced the uniform air velocity distribution through model DFO 3-3. ANSYS®* Structure Analysis Software shown below (right) demonstrates lowest stress levels and deflections for model DFO 3-3 under typical operating pressures.

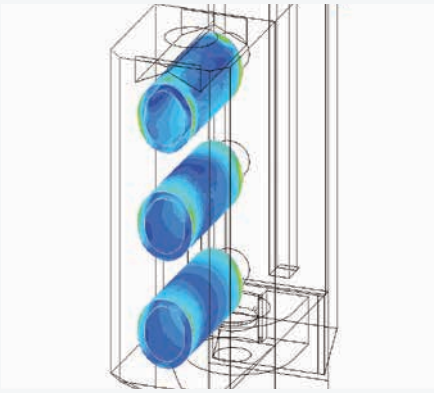

DFO 3-3 Air Velocity Distribution

DFO 3-3 Stress and Deflections Model

* FLUENT is a registered trademark of Fluent, Inc.; ANSYS is a registered trademark of ANSYS, Inc.

BETTER FILTRATION, PROLONGED FILTER LIFE

CONVEX SIDE WALLS

Technical discoveries improve filtration performance and prolonged filter life. A new cabinet design with convex side walls streamlines the airflow path and increases the cabinet's cross-sectional area. The convex side walls provide more space between filters, lower cabinet velocities and reduce the potential for media abrasion.

SHOWN: CROSS-SECTIONAL AREA OF COLLECTOR DIRTY AIR PLENUM.

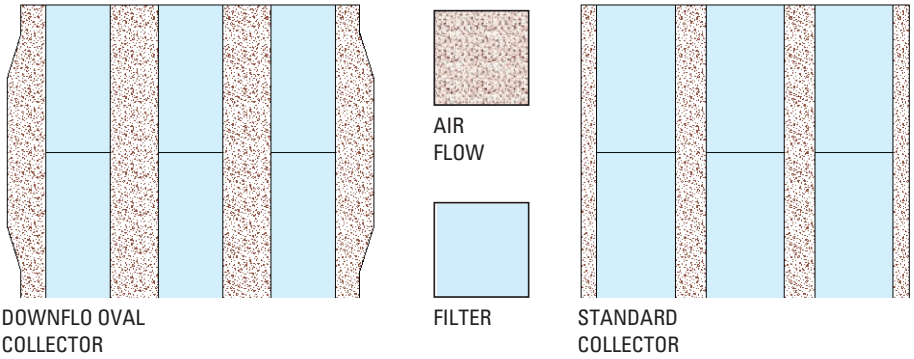

Cross-Sectional Areas

PULSE CLEANING TECHNOLOGY

ExtraLife™ Filter Cleaning System uses proprietary, computer-modeled pulse cleaning technology to easily "pulse off" dust from the surface of the filter, improving filtration efficiency and prolonging filter life. The red lines in the illustration show the increased pressure at the front of the Downflo filter generated by the ExtraLife system. The blue line shows the pulse signature of a standard cartridge collector.

Pulse gradients produced by the standard Downflo during pulse cleaning compared to gradients produced by a Downflo with the ExtraLife Cleaning System (red).

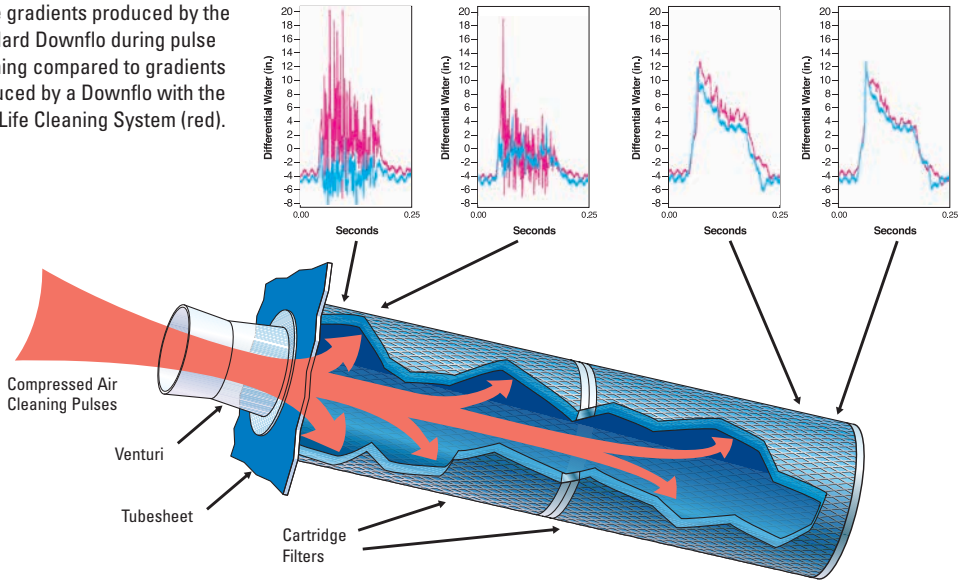

Downflo Pulse Pressure Gradients

FILTER CHANGES AND DISCHARGE MAINTENANCE

EASY MAINTENANCE

With the new design of the DFO's quick-release access handles, filter removal and maintenance is extremely fast with one simple movement of the clamp.

BAG-IN/BAG-OUT ARRANGEMENTS

Improve filter changeouts and hopper discharge maintenance, help minimize worker exposure to potentially harmful dusts, and reduce exposure of contaminants to the atmosphere.

- Porthole covers protect changeout bags and provide a clean appearance
- Heavy-duty plastic bags hold filters and function as gloves during the changeout procedure
- Filters are disposed of in a sealed bag
- Bag-in/Bag-Out drum arrangement is safely held in place through drum latches and hose clamps

OPERATING ADVANTAGES & CONDITIONS

DFO Models	1-1	2-2	3-3	2-4 THROUGH 4-128
Horsepower (HP)	1.5	3	5	**
Sound Level dB(A)*	68	68	70	**
External Static Pressure (in of H_2O/mm of H_2O)	***	***	***	**
Housing Construction (gauge)	12	12	12	10 (collector) 7 (tubesheet)
Housing Rating (in of H_2O/mm of H_2O)	-20/-508	-20/-508	-20/-508	-20/-508
Wind Load Rating (mph/kph)	—	—	—	100 / 161
Seismic Rating (zone)	4	4	4	4
Compressed Air Required (psi/bar)	60/4.1	60/4.1	60/4.1	2-4, 3-6: 60/4.1 2-8 and up: 90-100/6.2-6.9

* Sound measurements were taken in a hemianachoic chamber and under free field conditions and do not reflect the influences of actual operating environments. Standard sound pressure levels were taken at an operator position of 1.5 m high and 1 m from source.
** Provided through Donaldson Torit fan program.
*** See system performance curves on page 10.

ADDRESSING SAFETY CONCEPTS

Donaldson Torit manufactures or partners with experts to provide solutions for critical processes where harmful particulate must be controlled.

- Explosion Relief Panels (with or without weather domes)
- Suppression Systems
- Reinforced Housing Construction

SYSTEM CURVES FOR DFO MODELS 1-1, 2-2, AND 3-3

POWERFUL PERFORMANCE

Unlike other technologies that require upgrades for more demanding applications, each DFO 1-1, 2-2 and 3-3 footprint comes standard with a unique high performance power pack. The system performance graphs below show the fan performance with clean filters. The curve indicates available external static pressure to the unit.

DFO 1-1 1.5HP 60Hz with 6" (152.4 mm) inlet duct (clean filter)

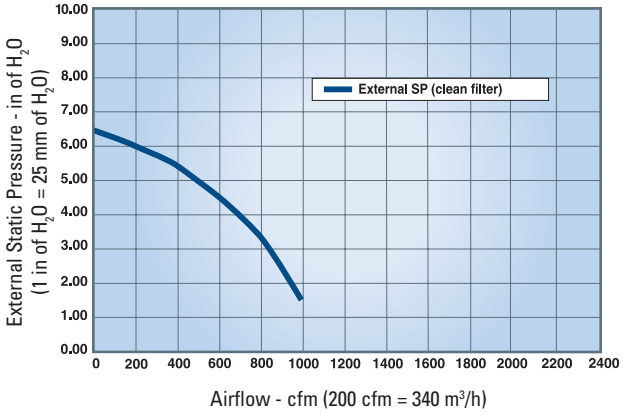

DFO 1-1 1.1kW 50Hz with 6" (152.4 mm) inlet duct (clean filter)

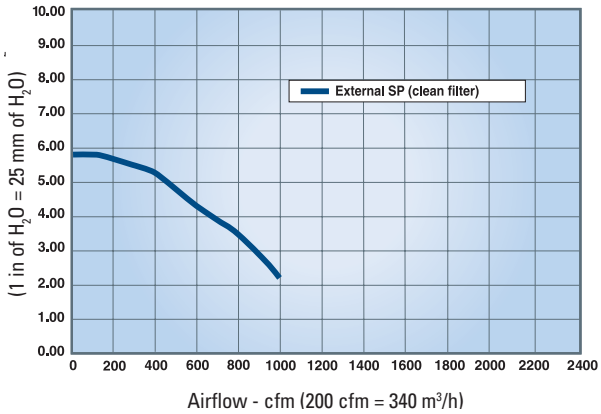

DFO 2-2 3HP 60Hz with 8" (203.2 mm) inlet duct (clean filters)

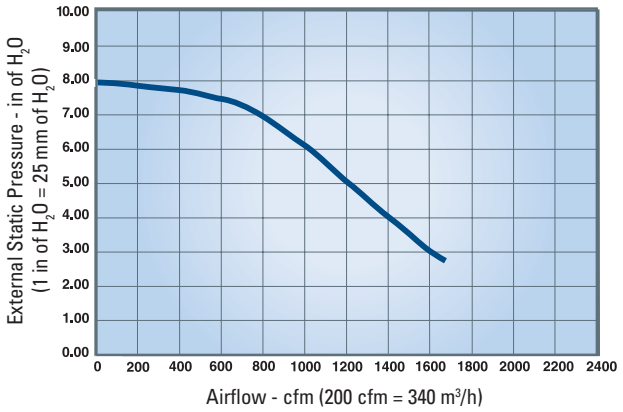

DFO 2-2 2.2kW 50Hz with 8" (203.2 mm) inlet duct (clean filters)

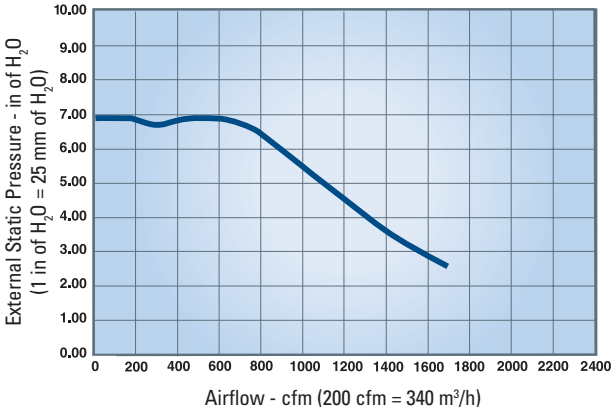

DFO 3-3 5HP 60Hz with 9" (228.6 mm) inlet duct (clean filters)

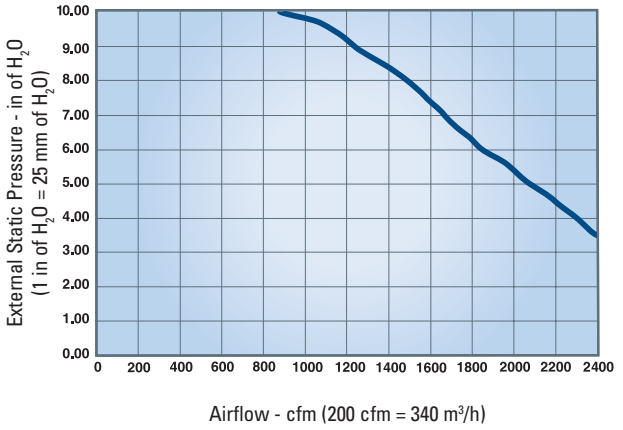

DFO 3-3 4.0kW 50Hz with 9" (228.6 mm) inlet duct (clean filters)

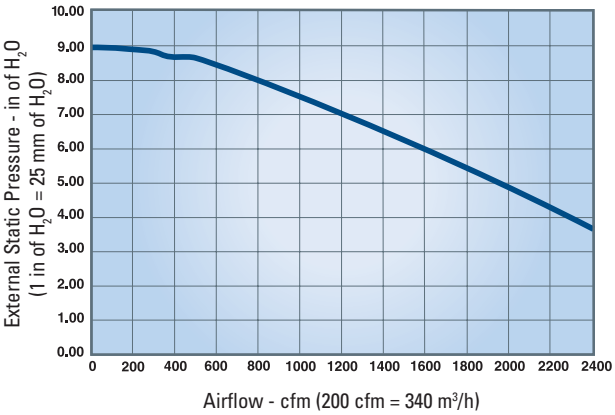

DIMENSIONS & SPECIFICATIONS

BASE MODULES 1-1, 2-2 & 3-3

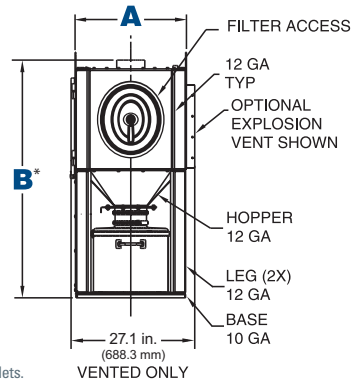

* Top of inlets.

Front View
DFO 1-1

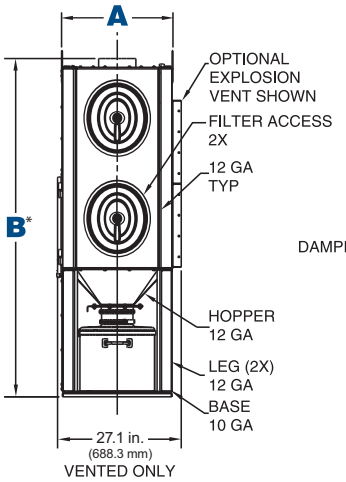

Front View
DFO 2-2

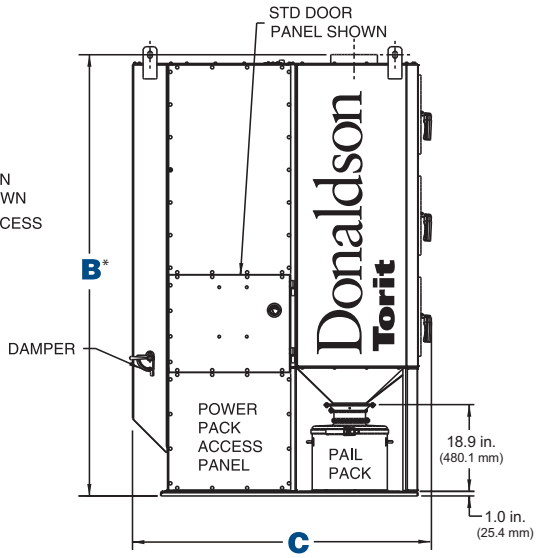

Left Side View
DFO 3-3

BASE MODULES 2-4 TO 4-128

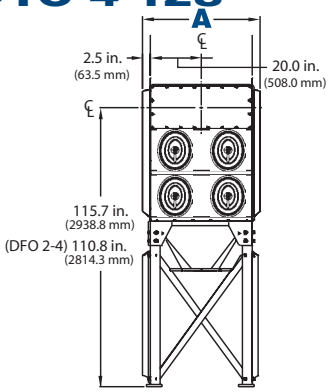

Front View
DFO 2-Models

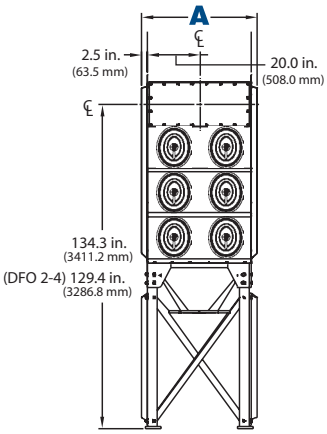

Front View
DFO 3-Models

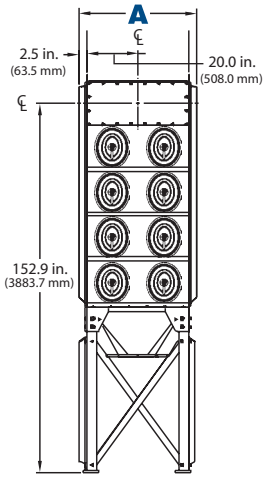

Front View
DFO 4-Models

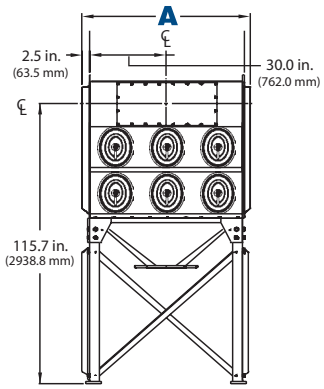

Front View DFO 2-12
(3-Wide Models)

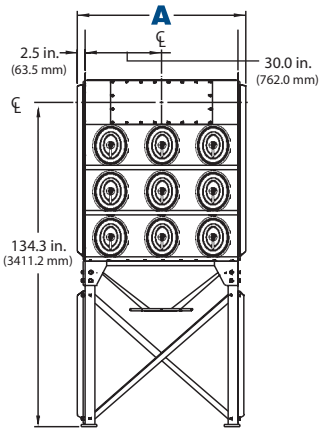

Front View DFO 3-18
(3-Wide Models)

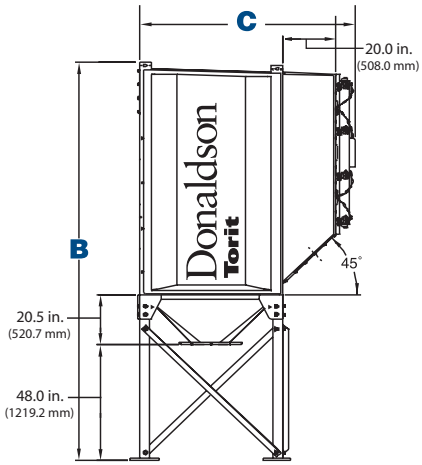

Right Side View
All Models

DFO Model*	Nominal Airflow Range**		No. of Filters	Ultra-Web Filter Area		No. of Valves	Approx. Shipping Weight ***		Dimensions					
									A		B		C	
	cfm	m³/h		ft²	m²		lb	kg	in	mm	in	mm	in	mm
1-1	100-800	169.9-1,358.9	1	190	17.7	1	800	362.9	30.0	762.0	52.0	1320.8	65.0	1651.0
2-2	200-1,600	339.7-2,717.8	2	380	35.3	2	1,000	453.6	30.0	762.0	74.0	1879.6	65.0	1651.0
3-3	300-2,400	509.6-4,076.8	3	570	53.0	3	1,300	589.7	30.0	762.0	96.0	2438.4	65.0	1651.0
2-4	380-3,190	645.5-5,418.7	4	760	70.6	4	1,100	499.0	45.0	1143.0	118.8	3017.5	62.0	1574.8
2-8	760-6,380	1,291.0-10,837.4	8	1,520	141.2	4	1,600	725.7	45.0	1143.0	127.8	3246.1	84.0	2133.6
2-12	1,140-9,580	1,936.5-16,273.1	12	2,280	211.8	6	2,100	952.5	65.0	1651.0	127.8	3246.1	84.0	2133.6
2-16	1,520-12,770	2,581.9-21,691.8	16	3,040	282.4	8	3,100	1,406.1	85.0	2159.0	127.8	3246.1	84.0	2133.6
2-24	2,280-19,150	3,872.9-32,529.1	24	4,560	423.6	12	4,200	1,905.1	125.0	3175.0	127.8	3246.1	84.0	2133.6
2-36	3,420-28,730	5,809.4-48,802.2	36	6,840	635.4	18	6,300	2,857.6	185.0	4699.0	127.8	3246.1	84.0	2133.6
3-6	570-4,790	968.2-8,136.5	6	1,140	105.9	6	1,400	635.0	45.0	1143.0	137.4	3490.0	62.0	1574.8
3-10	950-7,980	1,613.7-13,555.2	10	1,900	176.5	5	1,900	861.8	45.0	1143.0	146.5	3721.1	85.3	2166.6
3-12	1,140-9,580	1,936.5-16,273.1	12	2,280	211.8	6	2,000	907.2	45.0	1143.0	146.5	3721.1	85.3	2166.6
3-18	1,710-14,370	2,904.7-24,409.6	18	3,420	317.7	9	2,800	1,270.1	65.0	1651.0	146.5	3721.1	85.3	2166.6
3-24	2,280-19,150	3,872.9-32,529.1	24	4,560	423.6	12	3,300	1,496.9	85.0	2159.0	146.5	3721.1	85.3	2166.6
3-36	3,420-28,730	5,809.4-48,802.2	36	6,840	635.4	18	6,100	2,766.9	125.0	3175.0	146.5	3721.1	85.3	2166.6
3-48	4,560-38,300	7,745.8-65,058.3	48	9,120	847.2	24	8,100	3,674.1	165.0	4191.0	146.5	3721.1	85.3	2166.6
3-60	5,700-47,880	9,682.3-81,331.4	60	11,400	1,059.1	30	10,100	4,581.3	205.0	5207.0	146.5	3721.1	85.3	2166.6
3-72	6,840-57,460	11,618.8-97,604.4	72	13,680	1,270.9	36	12,100	5,488.5	245.0	6223.0	146.5	3721.1	85.3	2166.6
4-16	1,520-12,770	2,581.9-21,691.8	16	3,040	282.4	8	2,400	1,088.6	45.0	1143.0	165.1	4193.5	85.3	2166.6
4-32	3,040-25,540	5,163.9-43,383.5	32	6,080	564.8	16	4,200	1,905.1	85.0	2159.0	165.1	4193.5	85.3	2166.6
4-48	4,560-38,300	7,745.8-65,058.3	48	9,120	847.2	24	7,400	3,356.6	125.0	3175.0	165.1	4193.5	85.3	2166.6
4-64	6,080-51,070	10,327.8-86,750.1	64	12,160	1,129.7	32	9,100	4,127.7	165.0	4191.0	165.1	4193.5	85.3	2166.6
4-80	7,600-63,840	12,909.7-108,441.8	80	15,200	1,412.1	40	11,000	4,989.5	205.0	5207.0	165.1	4193.5	85.3	2166.6
4-96	9,120-76,600	15,491.7-130,116.6	96	18,240	1,694.5	48	12,600	5,715.3	245.0	6223.0	165.1	4193.5	85.3	2166.6
4-112	10,640-89,380	18,073.6-151,825.3	112	21,280	1,976.9	56	14,500	6,577.1	285.0	7239.0	165.1	4193.5	85.3	2166.6
4-128	12,160-102,150	20,655.6-173,517.1	128	24,320	2,259.3	64	16,100	7,302.8	325.0	8255.0	165.1	4193.5	85.3	2166.6

* The first number indicates number of filter rows, and the second number indicates number of cartridges.
** Based on clean filters.
*** Without accessories or optional equipment.

PROVEN PERFORMANCE ON HUNDREDS OF APPLICATIONS

DFO 3-6 on Sawing of High Pressure Hydraulic Hose

DFO 2-4 on Fiberglass Routing & Cutting

DFO 4-112 on Titanium Grinding

DFO 4-48 on Metal Grinding

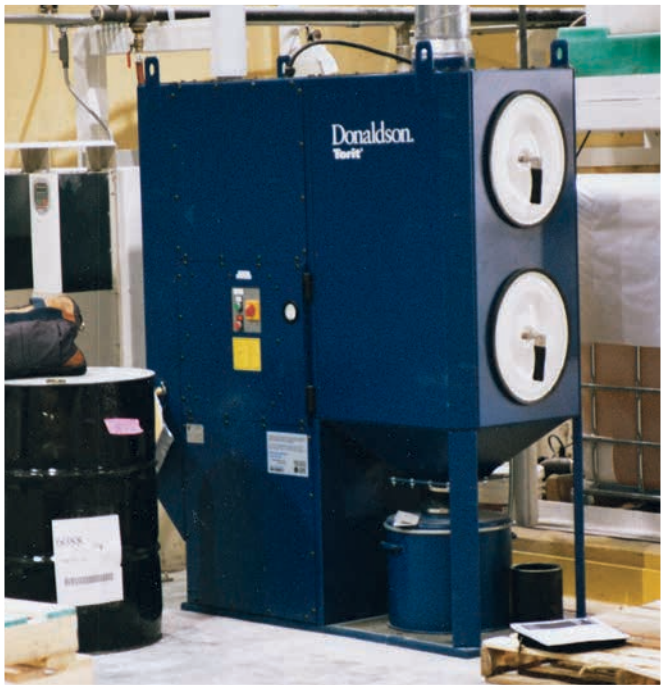

DFO 2-2 on Paint Pigment Dust

STANDARD FEATURES & AVAILABLE OPTIONS

DFO 1-1, 2-2, 3-3

Collector Design†	Std	Opt
Mild Steel Construction	X	
Integral High Performance Power Packs	X	
Ledge-Free Hopper	X	
Inlet	X	
Sprinkler Taps	X	
ExtraLife™ Filter Cleaning System	X	
Quick-Removal Access Covers	X	
Integral Exhaust Silencer	X	
Airflow Damper	X	
Stainless Steel Construction		X
Explosion Protected Models		X
High Static Power Packs		X
Inlet Damper		X
Abrasion Resistant (AR) Inlet		X
Sprinkler Heads		X
Extraction Arms		X
Caster Packs		X
Bag-Out Kit (Filter & Discharge)		X
Bag-In/Bag-Out Kit (Filter & Discharge)		X
Cartridge Filters		
Ultra-Web® (MERV* 15)	X	
Fibra-Web® (MERV 14); Ultra-Tek® (MERV 12); Ultra-Web® AS (MERV 15); Ultra-Web® SB (MERV 15); Thermo-Web™ (MERV 14); Torit-Tex™ (MERV 16)		X
HEPA/ASHRAE Afterfilters		X
Paint System		
Textured Multi-Coat Paint Finish with 2,000-Hour Salt Spray Performance	X	
Custom Color		X
Premium Duty Finish		X
Epoxy Coating		X
Hopper Discharge		
10-Gallon (37.9-Liter) Pail Pack	X	
10-Gallon (37.9-Liter) Pail Pack with Sealer Gear		X
25-Gallon (94.6-Liter) Dust Container		X
Electrical Controls, Gauges & Enclosures		
Minihelic®** Gauge	X	
Manual or Automated Downtime Cleaning	X	
Solenoid Enclosure in NEMA 12	X	
Continuous On-Demand Delta P Control		X
Solenoid Enclosure NEMA 9		X
Starter Controls		X
Warranty		
10-Year Warranty	X	

* The Minimum Efficiency Reporting Value (MERV) of this filter cartridge has been determined through independent laboratory testing using ASHRAE 52.2 (2007) test standards. The MERV rating was determined at a face velocity of 118 feet (36.0 m) per minute and loading up to four inches (101.6 mm) water gauge. Actual efficiency of any filter cartridge will vary according to the specific application parameters. Dust concentration, airflow, particle characteristics, and pulse cleaning methods all affect filtration efficiency.

** Minihelic, Magnehelic and Photohelic are registered trademarks of Dwyer Instruments, Inc.

† Donaldson Torit equipment is designed to IBC guidelines for specific wind speed exposure and seismic spectral acceleration at grade level. Contact your Donaldson Torit representative for detailed information available on the equipment's Spec Control drawings. Equipment may be customized to meet unique, customer-specified site requirements.

DFO 2-4 to 4-128

Collector Design†	Std	Opt
Mild Steel Construction	X	
ExtraLife™ Filter Cleaning System	X	
Quick-Removal Access Covers	X	
Inlets	X	
Ledge-Free Hopper	X	
Sprinkler Taps	X	
Stainless Steel Construction		X
High Temperature Construction		X
Explosion Protected Models		X
Direct Drive Fans		X
Chamber and Exhaust Silencers		X
Abrasion Resistant (AR) Inlet		X
Air Management Modules		X
Extended Dirty Air Plenum		X
Steep-Sided Hopper		X
2-Mod Hopper		X
Sprinkler Heads		X
Service Platform (OSHA compliant)		X
Damper Pack		X
Drum Sentry™ Drum-Full Indicator		X
Lined Clean Air Plenum		X
Bag-Out Kit (Filter & Discharge)		X
Bag-In/Bag-Out Kit (Filter & Discharge)		X
Cartridge Filters		
Ultra-Web® (MERV* 15)	X	
Fibra-Web® (MERV 14); Ultra-Tek® (MERV 12); Ultra-Web® AS (MERV 15); Thermo-Web™ (MERV 14); Torit-Tex™ (MERV 16)		X
HEPA/ASHRAE Afterfilters		X
Paint System		
Prime Coated Interior	X	
Textured Multi-Coat Paint Finish with 2,000-Hour Salt Spray Performance	X	
Custom Color		X
Premium Duty Finish		X
Epoxy Coating		X
Hopper Discharge		
Drum Cover and Hose		X
Slide Gates		X
Rotary Valves and Transitions		X
Screw Conveyors		X
Electrical Controls, Gauges & Enclosures		
Control Box w/Timer in NEMA 4 Enclosure	X	
Magnehelic®** Gauge Controls	X	
Delta P Control, Delta P Plus Control		X
Dustronix™ Control Assembly		X
Custom Panels		X
Photohelic®** Gauge Standard and Weatherproof		X
Basic Cold Climate Kit		X
Heavy-Duty Cold Climate Kit		X
Solenoid Enclosure (NEMA 7 & 9)		X
iCue™ Connected Filtration Service		X
Warranty		
10-Year Warranty	X	

Industry-Leading Technology

- Advanced filtration technology for optimal performance
- Reduced energy consumption and cost of ownership
- Advanced design and testing capabilities

The Most Filters and Parts

- For every brand and style of collector
- Wide range of filtration media for any application
- 90,000 filters and parts in stock and ready to ship

Unparalleled Support

- Live technical specialists
- Comprehensive pre- and post-sale support
- 40 manufacturing plants and 14 distribution centers worldwide

Significantly improve the performance of your collector with genuine Donaldson Torit replacement filters and parts. **Call Donaldson Torit at 800-365-1331.**

Important Notice
Many factors beyond the control of Donaldson can affect the use and performance of Donaldson products in a particular application, including the conditions under which the product is used. Since these factors are uniquely within the user's knowledge and control, it is essential the user evaluate the products to determine whether the product is fit for the particular purpose and suitable for the user's application. All products, product specifications, availability and data are subject to change without notice, and may vary by region or country.

Donaldson Company, Inc.
Minneapolis, MN

donaldsontorit.com • shop.donaldson.com

North America
Email: donaldsontorit@donaldson.com
Phone: (USA): +1-800-365-1331 • (MX): +1-800-343-36-39

Australasia
Email: marketing.australia@donaldson.com
Phone: +61-2-4350-2000
Toll Free: (AU) +1800-345-837 • (NZ) +0800-743-387

China
Email: info.cn@donaldson.com
Phone: +86-400-820-1038

Donaldson Europe B.V.B.A.
Email: IAF-europe@donaldson.com
Phone: +32-16-38-3811

India
Email: info.difs@donaldson.com
Phone: +91-124-4807-400 • +18001035018

Japan
Email: jp-ndl.ifsweb@donaldson.com
Phone: +81-42-540-4112

Korea
Email: iaf-kr@donaldson.com
Phone: +82-2-517-3333

Latinoamerica
Email: IndustrialAir@donaldson.com
Phone: +52-449-300-2442

South Africa
Email: SAMarketing@donaldson.com
Phone: +27-11-997-6000

Southeast Asia
Email: IAF.SEA@donaldson.com
Phone: +65-6311-7373

F118006 ENG (02/20) Downflo Oval Dust Collector Brochure ©2011-2020 Donaldson Company, Inc. Donaldson, Torit, Downflo, iCue, Ultra-Web, Fibra-Web, Ultra-Tek, Thermo-Web, Torit-Tex and the color blue are marks of Donaldson Company, Inc. All other marks belong to their respective owners.

'STEDMAN MEGA-SLAM'

Mega-Slam™ Specifications[1]

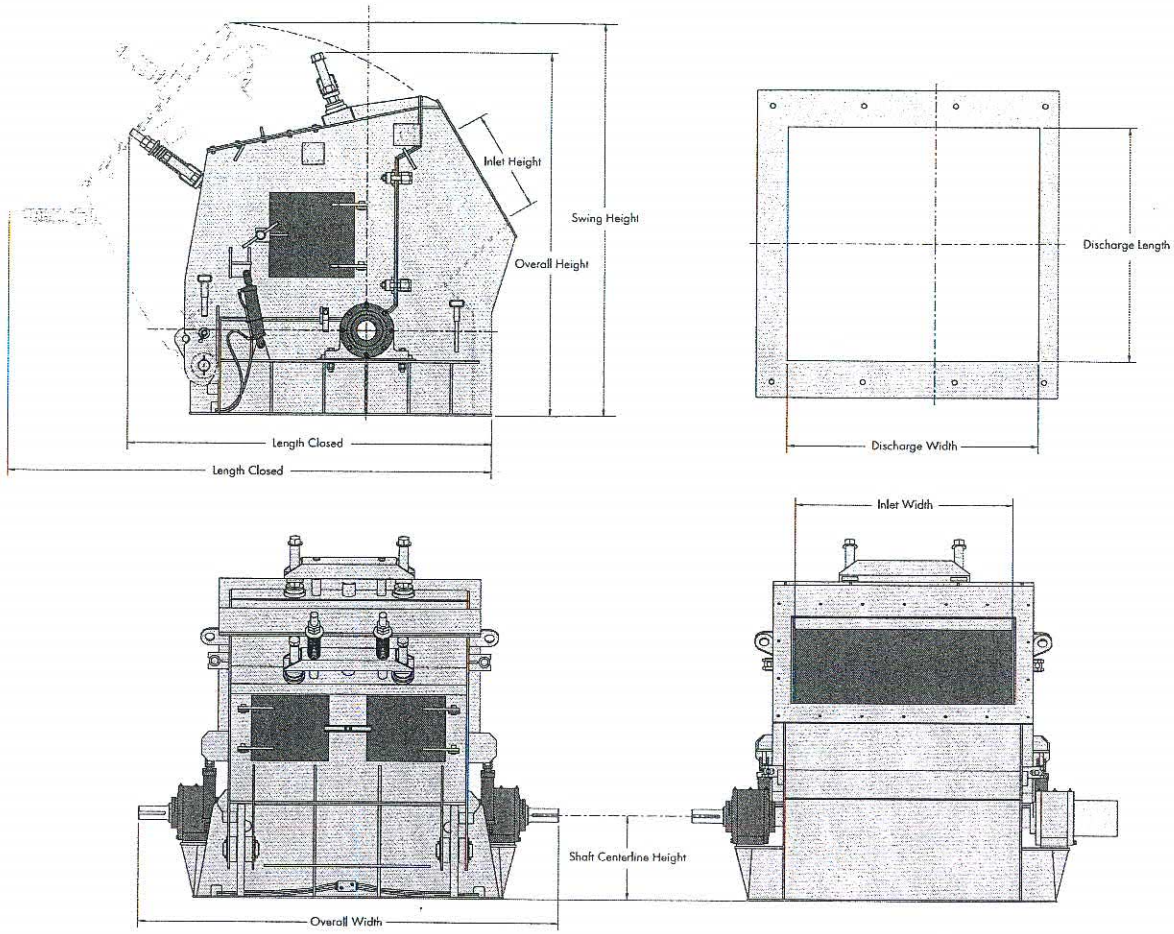

Model Number	Rotor Dia. x Rotor Width	Capacity Range TPH[2]	Net Inlet Opening W x H	Net Discharge W x L	Height			Width Overall	Length		Crusher Weight Lbs.
					Shaft ℄	Overall	Swing		Closed	Open	
MS4230	42 x 30	100 - 125	31 x 28	65 x 40	24	89	109	83	106	140	22,000
MS4260	42 x 60	175 - 200	61 x 28	65 x 70	24	89	109	113	106	140	31,000
MS4860	48 x 60	250 - 300	61 x 34	65 x 82	25	113	123	116	109	141	45,000
MS5460	54 x 60	350 - 500	61 x 40	65 x 91	31	138	144	128	118	177	65,000
MS6460	64 x 60	550 - 700	61 x 46	65 x 105	36	157	169	137	139	203	83,000

[1] Technical data subject to change without notice. All dimensions in inches unless otherwise noted. Caution: Do not use these dimensions for construction purposes.
[2] Medium limestone. Throughput capacities may vary depending on feed size, feed rate, operating conditions, physical characteristics of the feed material and breaker bar gap settings.

Customer Service Testing Facility

We invite you to send a sample of your feed material for evaluation in Stedman's Customer Service Testing Facility. All tests will be run in a full-size production model "GS" mill. Contact Customer Service Testing at the address below for more details.

Originator of the Cage Mill

STEDMAN

SINCE 1834

1-800-262-5401

STEDMAN • P.O. Box 299 • Aurora, IN 47001 • Toll free: 800-262-5401 • Fax: 812-926-3482
Email: sales@stedman-machine.com • Internet: www.stedman-machine.com

Printed in U.S.A.

Catalog No. 618-R3

© Copyright 2004, Stedman Machine Company

Attachment C

TRAVELERS

ONE TOWER SQUARE
HARTFORD CT 06183

WORKERS COMPENSATION
AND
EMPLOYERS LIABILITY POLICY

EXTENSION OF INFO PAGE-SCHEDULE WC 00 00 01 (A)

POLICY NUMBER: UB-9M213483-22-14-G

INSURER: THE TRAVELERS INDEMNITY COMPANY OF AMERICA

INSURED'S NAME: BRICKWORKS NORTH AMERICA 13439-PA

RATE BUREAU ID: 003402664

EXP. MOD. EFFECTIVE DATE: 07-31-22

CLASSIFICATION	CODE	PREMIUM BASIS ESTIMATED TOTAL ANNUAL REMUNERATION	RATES PER $100 OF REMUNERATION	ESTIMATED ANNUAL PREMIUM
LOCATION 001				
FEIN 833983060 ENTITY CD 001 00				
BRICKWORKS NORTH AMERICA CORPORATION				
1166 SPRING ST WYOMISSING , PA 19610 NAICS: 327331				
FEIN 310943426 ENTITY CD 004 00				
GLEN-GERY CORPORATION				
1166 SPRING ST WYOMISSING , PA 19610 NAICS: 327331				
CONCRETE PRODUCTS MANUFACTURING	0511	IF ANY	5.55	0
BRICK MFG., N.O.C. USL HW-SEE ENDT WC 99 01 01	0512U	IF ANY	6.38370000	0
BRICK MFG., N.O.C.	0512	13719871.00	3.69	506263
TRUCKING, N.O.C.	0811	156252.00	6.82	10656
LUMBER AND/OR BUILDING MATERIAL DEALER	0855	489092.00	4.00	19564
SALESPERSON-OUTSIDE	0951	240643.00	0.24	578
CLERICAL OFFICE EMPLOYEES	0953	11353063.00	0.12	13624

CLASSIFICATION	CODE	WAIVER PREMIUM BASIS	RATE	ESTIMATED ANNUAL PREMIUM
BLANKET WAIVER OF SUBROGATION SEE ENDT WC 00 03 13 00	0930	550685	0.020	11014

DATE OF ISSUE: 08-10-22 HF

EMPLOYER – Name: BRICKWORKS NORTH AMERICA CORPORATION
Address: 1166 SPRING ST
WYOMISSING PA 19610

Telephone No: (610) 374-4011
FEIN: 833983060

CARRIER – Name: THE TRAVELERS INSURANCE COMPANIES

Telephone No: (800) 238-6225

POLICY NUMBER: 9M213483

EMPLOYER – Name: BRICKWORKS NORTH AMERICA CORPORATION
Address: 1166 SPRING ST
WYOMISSING PA 19610

Telephone No: (610) 374-4011
FEIN: 833983060

CARRIER – Name: THE TRAVELERS INSURANCE COMPANIES

Telephone No: (800) 238-6225

POLICY NUMBER: 9M213483

EMPLOYER – Name: BRICKWORKS NORTH AMERICA CORPORATION
Address: 1166 SPRING ST
WYOMISSING PA 19610

Telephone No: (610) 374-4011
FEIN: 833983060

CARRIER – Name: THE TRAVELERS INSURANCE COMPANIES

Telephone No: (800) 238-6225

POLICY NUMBER: 9M213483

Attachment D

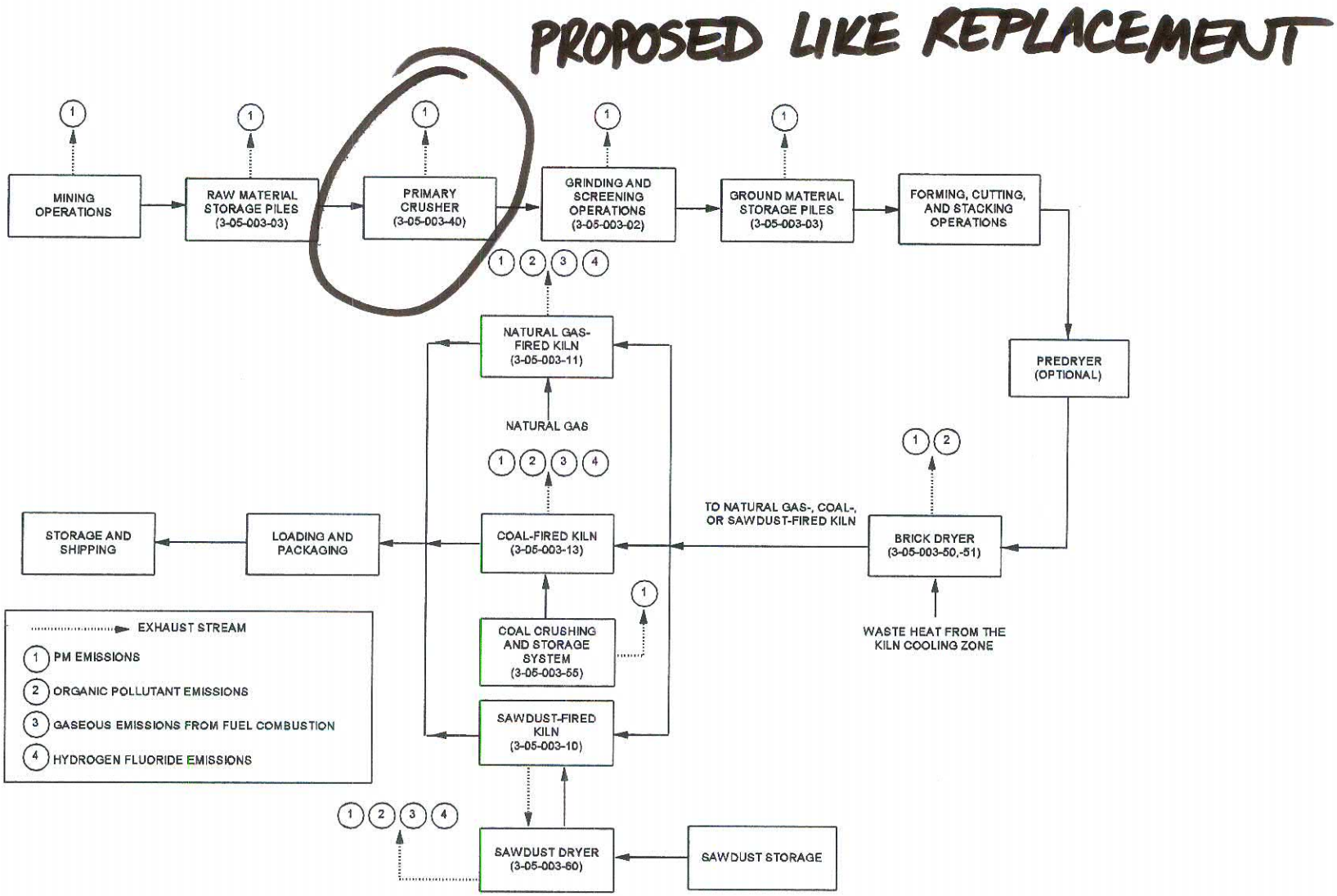

Figure 11.3-1. Typical brick manufacturing process.
(Source Classification Codes in parentheses.)

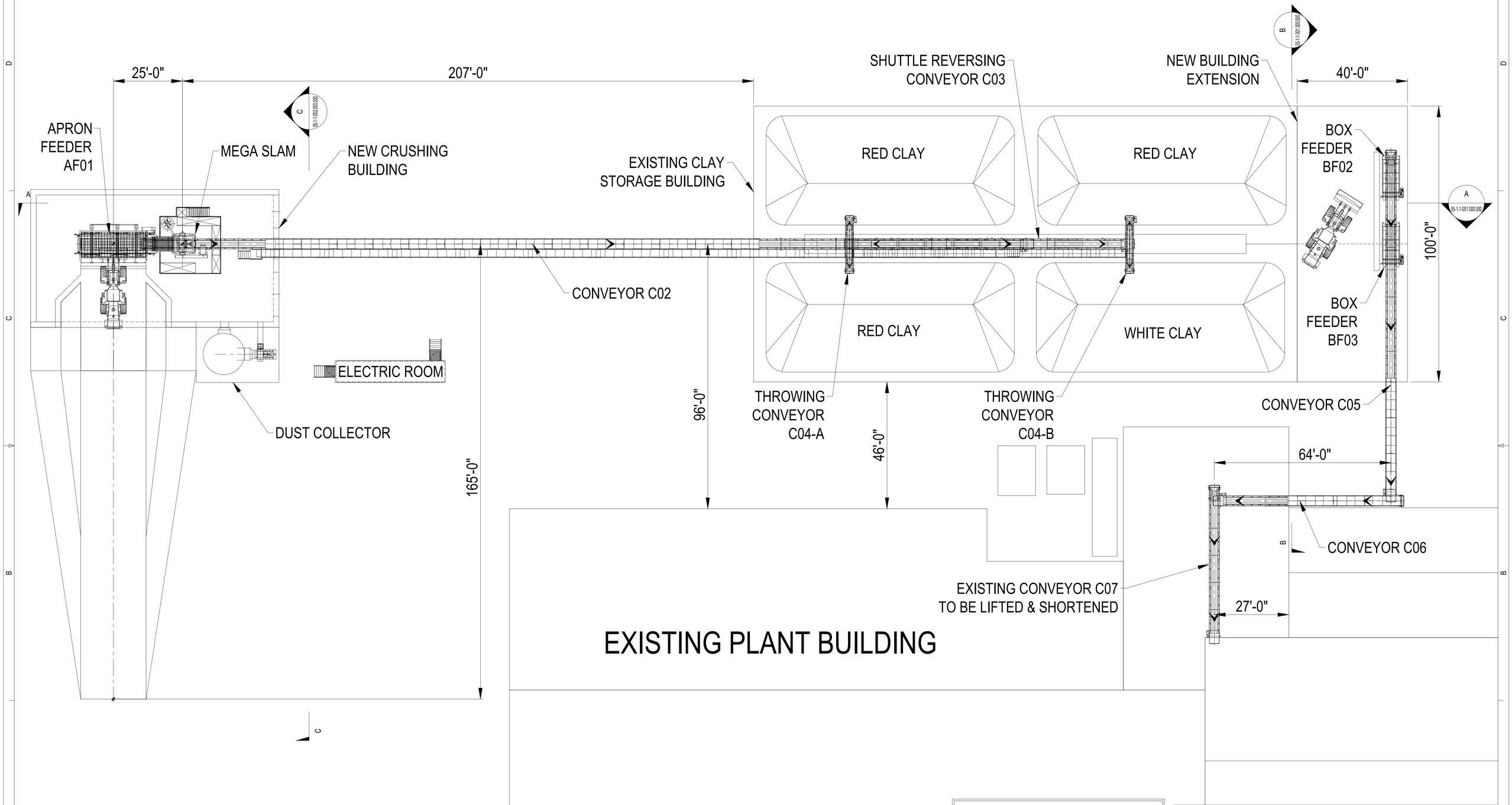

PRELIMINARY

DRAWING NO.	REFERENCE DRAWING TITLE	REV	DETAILS	DATE	BY	APP	REV	DETAILS	DATE	BY	APP
							A	INITIAL RELEASE	22 Nov. 2022	SM	-

ALL OR PART OF THIS DRAWING MAY CONTAIN INFORMATION PROPRIETARY TO DIREXA, AND SHALL NOT BE REPRODUCED NOR USED IN MANUFACTURING ANY EQUIPMENT WITHOUT THE WRITTEN PERMISSION OF DIREXA. THE FURNISHING OF THIS DRAWING DOES NOT IMPLY ANY MANUFACTURING RIGHTS AND THE DRAWING REMAINS THE PROPERTY OF DIREXA AND MAY BE RECALLED AT ANY TIME.

Direxa
Direxa , LLC
3609 S. Wadsworth Blvd., #370
Lakewood, CO 80235, USA
Tel. (720) 263-5685
Fax (720) 263-5684
www.direxa.com

GLEN GERY - ROCKY RIDGE

PLANT RESTART - ZOOMED-IN VIEW

CRUSHING AREA. GENERAL ARRANGEMENT

SIZE	DRAWING NUMBER	REVISION
D	US2600-05-1-1-001.000.000	A

DRAWN BY	CHECKED BY	DATE	SCALE	SHEET NO.
SM	-	08/03/2022	1/16"=1'-0"	1 OF 1

Attachment E

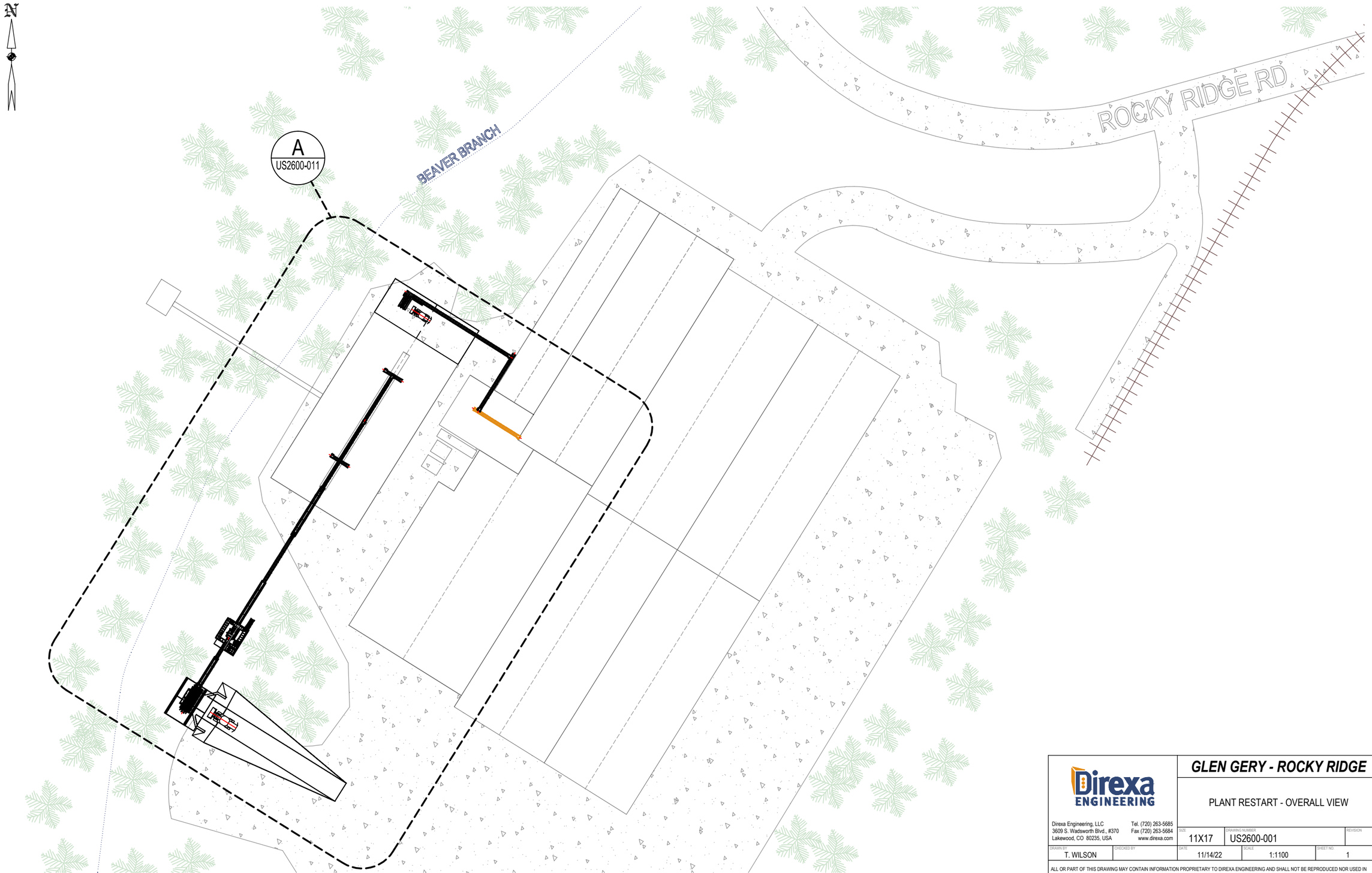

Direxa ENGINEERING

Direxa Engineering, LLC
3609 S. Wadsworth Blvd., #370
Lakewood, CO 80235, USA
Tel. (720) 263-5685
Fax (720) 263-5684
www.direxa.com

GLEN GERY - ROCKY RIDGE

PLANT RESTART - OVERALL VIEW

SIZE	DRAWING NUMBER	REVISION
11X17	US2600-001	

DRAWN BY	CHECKED BY	DATE	SCALE	SHEET NO.
T. WILSON		11/14/22	1:1100	1

ALL OR PART OF THIS DRAWING MAY CONTAIN INFORMATION PROPRIETARY TO DIREXA ENGINEERING AND SHALL NOT BE REPRODUCED NOR USED IN MANUFACTURING ANY EQUIPMENT WITHOUT THE WRITTEN PERMISSION OF DIREXA ENGINEERING. THE FURNISHING OF THIS DRAWING DOES NOT IMPLY ANY MANUFACTURING RIGHTS AND THE DRAWING REMAINS THE PROPERTY OF DIREXA ENGINEERING AND MAY BE RECALLED AT ANY TIME.

Attachment F

Table 1
Potential Emission Calculations for New Mega-Slam 4260 Primary Crusher
Glen-Gery Corporation - Rocky Ridge Plant

Pollutant	Emission Factor (lb/ton)		Previous Portable Crusher PTE (Uncontrolled)		New MS 4260 Crusher PTE (Uncontrolled)		New MS 4260 Crusher PTE (Controlled)	
	Controlled [a]	Uncontrolled [b]	(lb/hr)	(tpy)	(lb/hr)	(tpy)	(lb/hr)	(tpy)
Total PM	0.00059	0.025	5.00	21.90	4.38	19.16	0.103	0.452
Total PM_{10}	0.00059	0.025	5.00	21.90	4.38	19.16	0.103	0.452
Total $PM_{2.5}$	0.00059	0.025	5.00	21.90	4.38	19.16	0.103	0.452

a) Emissions factors were derived from Table 11.3-1 (Primary crusher with fabric filter) of U.S. EPA AP-42 Chapter 11.3 - Brick and Structural Clay Product Manufacturing (August 1997).The new crusher will be equipped with control equipment. Therefore, the emissions factors used in the table represent pre-control conditions assuming the AP-42 emissions factor accounts for 90% control efficiency. Emissions calculations conservatively assume PM=PM 10 =PM 2.5 .
b) Emissions factors derived from Table 11.3-1 (Processing wet material) of U.S. EPA AP-42 Chapter 11.3 - Brick and Structural Clay Product Manufacturing (August 1997). Raw material will consist of clay & shale with a moisture content of approximately 13%. Grinding and screening operations will be completed inside a fully enclosed building. Emissions calculations conservatively assume PM=PM 10=PM2.5.

Table 2
Estimated Emission Calculations for New Mega-Slam 4260 Primary Crusher
Glen-Gery Corporation - Rocky Ridge Plant

Pollutant	Emission Factor (lb/ton)		Previous Portable Crusher PTE (Uncontrolled)		New MS 4260 Crusher PTE (Uncontrolled)		New MS 4260 Crusher PTE (Controlled)	
	Controlled [a]	Uncontrolled [b]	(lb/hr)	(tpy)	(lb/hr)	(tpy)	(lb/hr)	(tpy)
Total PM	0.00059	0.025	0.30	1.30	0.30	1.30	0.007	0.031
Total PM_{10}	0.00059	0.025	0.30	1.30	0.30	1.30	0.007	0.031
Total $PM_{2.5}$	0.00059	0.025	0.30	1.30	0.30	1.30	0.007	0.031

a) Emissions factors were derived from Table 11.3-1 (Primary crusher with fabric filter) of U.S. EPA AP-42 Chapter 11.3 - Brick and Structural Clay Product Manufacturing (August 1997).The new crusher will be equipped with control equipment. Therefore, the emissions factors used in the table represent pre-control conditions assuming the AP-42 emissions factor accounts for 90% control efficiency. Emissions calculations conservatively assume PM=PM 10 =PM 2.5 .
b) Emissions factors derived from Table 11.3-1 (Processing wet material) of U.S. EPA AP-42 Chapter 11.3 - Brick and Structural Clay Product Manufacturing (August 1997). Raw material will consist of clay & shale with a moisture content of approximately 13%. Grinding and screening operations will be completed inside a fully enclosed building. Emissions calculations conservatively assume PM=PM 10=PM2.5.

Note that the following were used in the development of this table:

Rated maximum hourly throughput of raw material (previous portable crusher):	200	ton/hr
Rated maximum hourly throughput of raw material (New MS 4260 crusher):	175	ton/hr
Annual Hours of Operation:	8760	hr/yr
Estimated Throughput [a]:	11.83	ton/hr
Pound to Ton Conversion:	2000	lb/ton

a)Per the limits set forth in Synethetic Minor Permit to Operate No. 021-0027 max production may not exceed 37 million brick equivalents each year so we have (37,000,000 B.E. (brick equivalents)/yr x 5.6 lbs per B.E.) ÷ 2000lbs/ton ÷ 8760hrs/yr = 11.83 ton/hr (shale & clay material).

Attachment G

1. IDENTIFICATION OF THE SUBSTANCE/MIXTURE AND THE COMPANY/UNDERTAKING

Product Identifier

Material Name: **Clay and/or Shale (includes other earthen materials)**

Trade Name: Clay and/or Shale
Chemical Family: Predominately Aluminum Silicates
Formula: Mixture

Relevant Identified Uses of the Substance or Mixture and Uses Advised Against

Intended Use: Brick manufacturing

Details of the Supplier of the Safety Data Sheet

Glen-Gery Corporation
1166 Spring Street
Wyomissing, PA 19610-6001
Product Support/Technical Services Phone: (610) 562-3076

Emergency telephone number:
Corporate Office: (610) 374-4011
Technical Services: (610) 562-3076
Contact E-Mail: GGtech01@oldcastle.com

2. HAZARDS IDENTIFICATION

Appearance: Solid; comes in wide range of colors

Hazard Classification of the Substance or Mixture:
Skin irritation 2
Eye irritation 2A
Skin sensitization 1B
Carcinogenicity 1A
Specific target organ toxicity - Single exposure 3
Specific target organ toxicity - Repeated exposure 1

Signal Word: Danger

Hazard Statement: Clay dust may contain crystalline silica, a chemical that has been determined by certain agencies to cause cancer. See Section 11 for more information on health hazards.

Pictograms:

2. HAZARDS IDENTIFICATION

Precautionary Statements: Limit inhalation of clay dust. Do not eat, drink or smoke when using this product. Wash hands thoroughly after handling. Contaminated work clothing must not be allowed out of the workplace. Obtain special instructions before use. Do not handle until all safety precautions have been read and understood. Wear protective gloves/protective clothing/eye protection/face protection. Use only outdoors or in a well-ventilated area.

Response: If exposed or concerned: Get medical advice/attention. If skin irritation or rash occurs: Get medical advice/attention. If in eyes: Rinse cautiously with water for several minutes. Remove contact lenses, if present and easy to do. Continue rinsing. If eye irritation persists: Get medical advice/attention. If brick dust is inhaled: Remove person to fresh air and keep comfortable for breathing. Call a poison center/doctor if you feel unwell.

Storage: Not Applicable

Disposal: Dispose of unused or unwanted brick products in accordance with all local, regional, national and international regulations.

3. COMPOSITION/INFORMATION ON INGREDIENTS

Ingredient	CAS Number	% Weight
Aluminum Silicates	Various	50 – 85
Quartz	14808-60-7	Varies

Additional Information: The above chemistries are provided for industrial hygiene and environmental purposes and are not intended to represent product specifications. This information has been compiled from data believed to be reliable. Elements such as aluminum, arsenic, boron, calcium, chromium, cobalt, copper, lead, molybdenum, nickel, tin, titanium, vanadium, and zirconium may be present in trace amounts. Clay and shale products as shipped do not present an exposure hazard.

4. FIRST AID MEASURES

Description of First Aid Measures

Eye Contact: Flush with running water for approximately 15 minutes, if necessary. Obtain medical assistance if irritation continues.

Skin Contact: Wash with soap and water. If an allergic reaction causes a rash that does not heal within a few days consult a physician. Treat abrasions using normal first aid procedures.

Ingestion: None (no known acute effects).

Inhalation: Remove from exposure to airborne particulates. Consult a physician if breathing does not return to normal.

Most Important Symptoms and Effects, Both Acute and Delayed

Symptoms and Effects of Exposure: For information on potential signs and symptoms of exposure, See Section 2 - Hazards Identification and/or Section 11 - Toxicological Information.

Medical Conditions Aggravated by Exposure: Excessive dust exposure may aggravate existing respiratory disorders or diseases. Possible complications or allergies resulting in irritation to skin, eyes, and respiratory tract may occur from excessive exposure to dusts.

Recommendations for Immediate Medical Attention and Special Treatment Needed

Notes to Physician: Symptoms may not appear immediately.

5. FIRE-FIGHTING MEASURES

Extinguishing Media: Not applicable

Special Hazards Arising from the Substance or Mixture

Hazardous Combustion Products: No data available

Fire / Explosion Hazards: Clay/Shale does not pose a fire or explosion hazard.

Advice for Fire-Fighters

None

6. ACCIDENTAL RELEASE MEASURES

Personal Precautions and Protective Equipment

Use personal protection recommended in Section 8.

Emergency Procedures

Not applicable.

Methods and Material for Containment and Cleaning Up

Not applicable.

Cleanup Procedures

Not applicable.

7. HANDLING AND STORAGE

Precautions for Safe Handling

Minimize dust generation and accumulation. Avoid breathing dust.

Conditions for Safe Storage, Including any Incompatibilities

Storage Conditions: NA

8. EXPOSURE CONTROLS / PERSONAL PROTECTION

Aluminum Silicates

OSHA PEL	15 mg/m^3
ACGIH TLV	10 mg/m^3

Quartz

OSHA PEL	10 / (%SiO_2 + 2) mg/m^3
ACGIH TLV	0.025 mg/m^3 (respirable)

Exposure Controls

Engineering Controls:	Inhalation of dust from these materials above established or recommended exposure levels should be avoided through engineering or administrative controls. Provide adequate ventilation to maintain exposures below the OSHA PEL and ACGIH TLV for quartz and other substances.
Personal Protective Equipment:	NIOSH and/or MSHA approved respirator.
Eyes and Face:	Protective glasses or face shields.
Skin:	Use gloves and or protective clothing if abrasions or allergic reactions are experienced.
Respiratory protection:	For airborne concentration exceeding the OSHA PEL or ACGIH TLV use a NIOSH and/or MSHA approved respirator in accordance with a respiratory protection program meeting the OSHA or MSHA standards for such programs [29 CFR Section 1910.134 or ANSI Z88.2 – 1969].
Other:	Recommend use of climate controlled enclosed cabs on earth moving equipment. In clay or shale processing areas, recommend area be properly ventilated and/or dust collection methods be employed to minimize and/or prevent exposure to respirable dust.

9. PHYSICAL AND CHEMICAL PROPERTIES

Physical State:	Solid	**Color:**	Shale: light brown to blue-black. Clay: Red, black, white to light gray
Odor:	No data available	**Odor Threshold:**	No data available
Molecular Formula:	Mixture	**Molecular Weight:**	Mixture

Solvent Solubility:	No data available
Water Solubility:	Negligible
pH:	No data available.
Melting/Freezing Point (°C):	NA
Boiling Point (°C):	NA

Partition Coefficient: (Method, pH, Endpoint, Value)
No data available

Decomposition Temperature (°C):	No data available.
Evaporation Rate (Gram/s):	No data available
Vapor Pressure (kPa):	NA
Vapor Density (g/ml):	NA
Relative Density:	No data available
Viscosity:	No data available

Flammablity:

Autoignition Temperature (Solid) (°C):	No data available
Flammability (Solids):	No data available
Flash Point (Liquid) (°C):	No data available
Upper Explosive Limits (Liquid) (% by Vol.):	No data available
Lower Explosive Limits (Liquid) (% by Vol.):	No data available

10. STABILITY AND REACTIVITY

Reactivity:	None
Chemical Stability:	Stable under normal conditions of use
Possibility of Hazardous Reactions:	
Oxidizing Properties:	No data available
Incompatible Materials:	No data available
Hazardous Decomposition Products:	No data available

11. TOXICOLOGICAL INFORMATION

Effects of Short Term and Long Term Exposure:

Short Term
During mining and/or processing, clays and shale may present an inhalation, ingestion or contact hazard.

Eye:	May cause irritation by abrasion with airborne dust.
Skin:	Dust may cause allergic reactions in hypersensitive individuals.
Inhalation:	Dust may cause congestion and irritation in nasal and respiratory passages.
Ingestion:	No known acute effects.

Long Term
Excessive exposures to respirable particulates (dust) over an extended period of time may result in the development of pulmonary diseases such as silicosis.

Information on Toxicological Effects

General Information: Toxicological properties of the formulation have not been investigated. The information in this section describes the potential hazards of crystalline silica. Clay, shale and other earthen materials contain naturally-occurring crystalline silica, a chemical that has been determined by the agencies listed below to cause cancer. Inhalation of dust from these materials above established or recommended exposure levels should be avoided through engineering or administrative controls or the use of a NIOSH and/or MSHA approved respirator.

Carcinogen Status: The following carcinogenicity classifications for crystalline silica have been established by the following agencies:

11. TOXICOLOGICAL INFORMATION

OSHA: Not regulated as a carcinogen

IARC: Group 1 carcinogenic in humans

NIOSH: Carcinogen, with no further categorization

NTP: Known carcinogen

12. ECOLOGICAL INFORMATION

There are no known environmental impacts.

13. DISPOSAL CONSIDERATIONS

Waste Treatment Methods: Dispose of waste in accordance with all applicable laws and regulations. State specific and Community specific provisions must be considered. It is recommended that waste minimization be practiced.

14. TRANSPORT INFORMATION

This material is not regulated for transportation as a hazardous material/dangerous good.

DOT: Clay, shale and earthen materials are not hazardous materials per DOT regulations.

15. REGULATORY INFORMATION

Safety, Health and Environmental Regulations/Legislation Specific for the Substance or Mixture

RCRA, CWA, CAA: Clay, shale and other earthen materials are typically not regulated as wastes unless they have been processed or contain other additives. Local regulation may vary, therefore, all waste must be disposed/recycled/reclaimed in accordance with federal, state, and local environmental control regulations. Water containing suspended solids from clay or shale mining or processing should be managed in accordance with federal, state and local environmental regulations. CAA legislation typically regulates fugitive and non-fugitive dust from clay mining and/or processing activities through the use of state and/or federal air permits.

EPCRA Section 311/312: Clay, shale and earthen materials are subject to reporting under Section 311/312.

15. REGULATORY INFORMATION

EPCRA Section 313: Clay, shale and earthen materials are not subject to the Section 313, Toxic Chemical Release Inventory reporting requirements.

DOT: Clay, shale and earthen materials are not hazardous materials per DOT regulations.

California Proposition 65: This product contains crystalline silica, a substance known to the State of California to cause cancer. This product may contain trace amounts of heavy metals known to the State of California to cause cancer, birth defects, or other reproductive harm.

16. OTHER INFORMATION

It is believed that clay, shale and earthen materials do not release hazardous substances in their undisturbed state. However, when the material is processed or handled in such a way as to produce airborne dust, precautions may be warranted to protect workers from potential exposure to respirable silica.

Data Sources: The data contained in this SDS may have been gathered from confidential internal sources, raw material suppliers, or from the published literature.

Reasons for Revision: Converted MSDS to SDS.

Prepared by: The Glen-Gery Corporation

This SDS was prepared with information believed accurate at the time of preparation and was prepared and provided in good faith. However, the Glen-Gery Corporation assumes no responsibility as to the accuracy or suitability of such information and no warranty expressed or implied is made.

End of Safety Data Sheet

Jessica Fitzwater
County Executive

FREDERICK COUNTY GOVERNMENT

DIVISION OF PLANNING & PERMITTING
Department of Development Review

Steven C. Horn, Division Director
Michael L. Wilkins, Director

February 17, 2023

Eric Brown
433 South Pottsville Pike
Shoemakersville, PA 19555

Re: 9801 Rocky Ridge Road
Rocky Ridge, MD 21778
Tax Map 26, Parcel 0027
Tax ID #151496
V274989

To Whom It May Concern,

The Glen-Gery Corporation's Rocky Ridge manufacturing facility located in Rocky Ridge, MD is proposing the installation of a new enclosed primary crusher and associated baghouse.

The above referenced property (Property) is currently zoned General Industrial (GI) under the Frederick County Zoning Ordinance (Ordinance).

§ 1-19-5.250. INDUSTRIAL ZONING DISTRICTS.
(A) The purpose of the industrial districts is to provide for the development of varied industrial uses that would supply needed employment opportunities for the county. Industrial development has inherent characteristics that require special attention and protection. Due regard must be given to industrial needs for adequate site locations with concentration on terrain, availability of water and sewer systems, transportation, and compatibility with surrounding development.
The General Industrial District (GI) is intended to provide areas for industries involving manufacturing or processing and for those industrial uses which cannot meet the performance criteria of the Limited Industrial District.

(G) The General Industrial District (GI) is intended to provide areas for industries involving manufacturing or processing and for those industrial uses which cannot meet the performance criteria of the Limited Industrial District.

Based on the review of the submitted materials in support of your request, I find that the new enclosed primary crusher and associated baghouse, are consistent with the ongoing brick manufacturing business.

A review of the records available to this office does not indicate any existing zoning violations at this Property at this time. The proposed addition of this machine may require local and state of Maryland permits.

If you have any questions, please contact me at 301-600-1491.

Sincerely,

Tolson DeSa
Zoning Administrator

ec: M. Wilkins
K. Mitchell
T. Sinton