MARYLAND DEPARTMENT OF THE ENVIRONMENT

AIR AND RADIATION ADMINISTRATION
APPLICATION FOR A PERMIT TO CONSTRUCT

DOCKET #05-23

COMPANY: Evans Funeral Chapel

LOCATION: Evans Funeral Chapel & Cremation Services - White Marsh, P.A.
11543 Philadelphia Road
White Marsh, Maryland 21162

APPLICATION: One (1) human crematory.

ITEM	DESCRIPTION
1	Notice of Application and Informational Meeting
2	Environmental Justice (EJ) Information - EJ Fact Sheet and MDE Score and Screening Report
3	Permit to Construct Application – Forms 5, 5A, 5EP, 5T, modeling results, emissions calculations, process flow diagram, vendor specifications, and plot plan.
4	Zoning Approval

MARYLAND DEPARTMENT OF THE ENVIRONMENT
AIR AND RADIATION ADMINISTRATION

NOTICE OF APPLICATION AND INFORMATIONAL MEETING

The Maryland Department of the Environment, Air and Radiation Administration (ARA) received a permit-to-construct application from Evans Funeral Chapel on February 21, 2023, for the installation of one (1) human crematory. The proposed installation will be located at Evans Funeral Chapel & Cremation Services - White Marsh, P.A., 11543 Philadelphia Road, White Marsh, Maryland 21162.

In accordance with HB 1200/Ch. 588 of 2022, the applicant provided an environmental justice (EJ) Score for the census tract in which the project is located using the Maryland EJ mapping tool. The EJ Score, expressed as a statewide percentile, was shown to be 41 which the Department has verified. This score considers three demographic indicators – minority population above 50%, poverty rate above 25% and limited English proficiency above 15%.

Copies of the application, the EJ mapping tool screening report (which includes the score), and other supporting documents are available for public inspection on the Department's website at https://mde.maryland.gov/programs/Permits/AirManagementPermits/Pages/index.aspx (click on Docket Number 05-23). Any applicant-provided information regarding a description of the environmental and socioeconomic indicators contributing to that EJ score can also be found at the listed website. Such information has not yet been reviewed by the Department. A review of the submitted information will be conducted when the Department undertakes its technical review of all documents included in the application.

Pursuant to the Environment Article, Section 1-603, Annotated Code of Maryland, an Informational Meeting has been scheduled so that citizens can discuss the application and the permit review process with the applicant and the Department.

An Informational Meeting will be held on Wednesday, May 24, 2023, at 6:00 pm at the White Marsh Volunteer Fire Company, 10331 Philadelphia Road, White Marsh, Maryland 21162.

The Department will provide an interpreter for deaf and hearing impaired persons provided that a request is made for such service at least ten (10) days prior to the meeting.

Further information may be obtained by calling Ms. Shannon Heafey at 410-537-4433.

Christopher R. Hoagland, Director
Air and Radiation Administration

Maryland Department of the Environment

The Applicant's Guide to Environmental Justice and Permitting

What You Need to Know

This fact sheet is designed to provide guidance to applicants on incorporating environmental justice screening requirements pursuant to House Bill 1200, effective October 1, 2022.

What is Environmental Justice?

The concept behind the term environmental justice (EJ) is that regardless of race, color, national origin, or income, all Maryland residents and communities should have an equal opportunity to enjoy an enhanced quality of life. How to assess whether equal protection is being applied is the challenge.

Communities surrounded by a disproportionate number of polluting facilities puts residents at a higher risk for health problems from environmental exposures. It is important that residents who may be adversely affected by a proposed source be aware of the current environmental issues in their community in order to have meaningful involvement in the permitting process. Resources may be available from government and private entities to ensure that community health is not negatively impacted by a new source located in the community.

Extensive research has documented that health disparities exist between demographic groups in the United States, such as differences in mortality and morbidity associated with factors that include race/ethnicity, income, and educational attainment. House Bill 1200 adds to MDE's work incorporating diversity, equity and inclusion into our mission to help overburdened and underserved communities with environmental issues.

What is House Bill 1200 and what does it require?

Effective October 1, 2022, House Bill 1200 requires a person applying for a permit from the Department under §1-601 of the Environment Article of the Annotated Code of Maryland or any permit requiring public notice and participation to include in the application an EJ Score for the census tract where the applicant is seeking the permit; requiring the Department, on receiving a certain permit application to review the EJ Score; and requiring notices to include information related to EJ Scores and generally relating to environmental permits and environmental justice screenings.

What is a "Maryland EJ Tool"?

The term "Maryland EJ Tool" means a publicly available state mapping tool that allows users to: (1) explore layers of environmental justice concern; (2) determine an overall EJ score for census tracts in the state; and (3) view additional context layers relevant to an area.

Maryland Department of the Environment

The Applicant's Guide to Environmental Justice and Permitting

What You Need to Know

What is an "EJ Score"?

The term "EJ Score" means an overall evaluation of an area's environment and environmental justice indicators, as defined by MDE in regulation, including: (1) pollution burden exposure; (2) pollution burden environmental effects; (3) sensitive populations; and (4) socioeconomic factors.

The Maryland EJ Screening Tool uses three demographic indicators – minority population above 50%, poverty rate above 25% and percent of the population having limited English proficiency above 15% - to calculate a score that can be used as an indicator of susceptibility to environmental exposure. It is that score, linked to the census tract where the project is to be located, that needs to be reported to MDE as part of your permit application.

What does the application require?

The link for the Maryland EJ Tool is located on the Department's website, www.mde.maryland.gov, under Quick Links as EJ Screening Tool. At the top right, please click the first button for the MDE Screening Report. Input the address of the proposed installation in the address bar. Click on the Report button. Once the report has been generated select the print icon.

The applicant needs to include the MDE Screening Report with the EJ Score from the Maryland EJ Tool as part of the permit application upon submission. An application will not be considered complete without the report.

The applicant is encouraged to provide the Department with a discussion about the environmental exposures in the community. This will provide pertinent information about how the applicant should proceed with engaging with the community. Residents of a community with a high indicator score and a high degree of environmental exposure should be afforded broader opportunities to participate in the permit process and understand the impacts a project seeking permit approval may have on them.

Questions

For air quality permits, please call 410-537-3230.
For water permits, please call 410-537-4145.
For land permits pertaining to Solid Waste, please call 410-537-3098.
For land permits pertaining to Oil Control, please call 410-537-3483.
For land permits pertaining to Animal Feeding Operations, please call 410-537-4423.
For land permits pertaining to Biosolids, please call 410-537-3403.

MDE EJ Screening Report

Area of Interest (AOI) Information

May 8 2023 15:54:08 Eastern Daylight Time

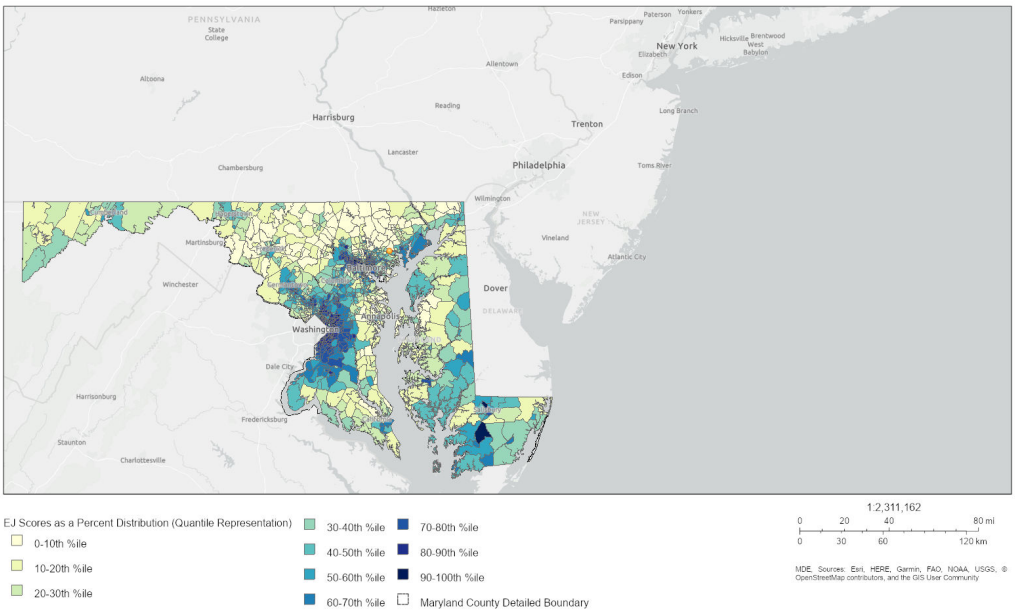

EJ Scores as a Percent Distribution (Quantile Representation)

- 0-10th %ile
- 10-20th %ile
- 20-30th %ile
- 30-40th %ile
- 40-50th %ile
- 50-60th %ile
- 60-70th %ile
- 70-80th %ile
- 80-90th %ile
- 90-100th %ile
- Maryland County Detailed Boundary

1:2,311,162

0 20 40 80 mi

0 30 60 120 km

MDE, Sources: Esri, HERE, Garmin, FAO, NOAA, USGS, © OpenStreetMap contributors, and the GIS User Community

Summary

Name	Count	Area(ft²)	Length(ft)
EJ Scores as a Percent Distribution (Quantile Representation)	1	N/A	N/A
Active High Air Emission Facilities	0	N/A	N/A
LRP Facilities	0	N/A	N/A
Maryland Dam Locations	0	N/A	N/A
Maryland Pond Locations	0	N/A	N/A
Wastewater Discharge Facilities	0	N/A	N/A
Historic Mine Locations	0	N/A	N/A
Significant Wastewater Treatment Plants	0	N/A	N/A
Point Source Discharges	0	N/A	N/A
All Permitted Solid Waste Acceptance Facilities	0	N/A	N/A
Municipal Solid Waste Acceptance Facilities	0	N/A	N/A

EJ Scores as a Percent Distribution (Quantile Representation)

#	Geographic Area Name	Percent Minority	Percent Poverty	Percent_Limited_English_Proficiency	SocioScore Percent Tract Only	Socio Percentile (All MD)	Socio Percentile (All MD) %	Area(ft²)
1	Census Tract 4113.02, Baltimore County, Maryland	34.30	16.21	0.80	17.10	40.96	40.964%	N/A

© MDE

MARYLAND DEPARTMENT OF THE ENVIRONMENT
1800 Washington Blvd ▪ Baltimore, Maryland 21230
(410) 537-3230 ▪1-800-633-6101 ▪ www.mde.state.md.us

Air and Radiation Management Administration ▪ Air Quality Permits Program

APPLICATION FOR PROCESSING/MANUFACTURING EQUIPMENT

Permit to Construct ☒ Registration Update ☐ Initial Registration ☐

1A. Owner of Equipment/Company Name
CHARLES F. EVANS, JR / EVANS FUNERAL CHAPEL

Mailing Address
8800 HARFORD ROAD
Street Address
BALTIMORE MD 21234
City State Zip

Telephone Number
(410) 665-9444

Signature

CHARLES F. EVANS, JR. PRES
Print Name and Title

2/20/24
Date

DO NOT WRITE IN THIS BLOCK
2. REGISTRATION NUMBER
County No. (1-2) Premises No. (3-6)
Registration Class (7) Equipment No. (8-11)
Data Year (12-13) Application Date

1B. Equipment Location and Telephone Number (if different from above)
11543 PHILADELPHIA ROAD
Street Number and Street Name
WHITE MARSH, MD 21162 (410) 665-9444
City/Town State Zip Telephone Number
EVANS FUNERAL CHAPEL & CREMATION SERVICES - WHITE MARSH, P.A.
Premises Name (if different from above)

3. Status (A= New, B= Modification to Existing Equipment, C= Existing Equipment)

Status (15)	New Construction Begun (MM/YY) (16-19)	New Construction Completed (MM/YY) (20-23)	Existing Initial Operation (MM/YY) (20-23)
A	T B D	T B D	

4. Describe this Equipment: Make, Model, Features, Manufacturer (include Maximum Hourly Input Rate, etc.)
Matthews Environmental Solutions; PPII Plus (3.0 MMBTU/hr) / Multi-Chamber cremation unit (Unit #1)

5. Workmen's Compensation Coverage E16 4734470 00 (Binder/Policy Number) 4-1-24 (Expiration Date)
Company EMPLOYERS PREFERRED INS. CO.
NOTE: Before a Permit to Construct may be issued by the Department, the applicant must provide the Department with proof of worker's compensation coverage as required under Section 1-202 of the Worker's Compensation Act.

6A. Number of Pieces of Identical Equipment Units to be Registered/Permitted at this Time 1

6B. Number of Stack/Emission Points Associated with this Equipment 1

7. Person Installing this Equipment (if different from Number 1 on Page 1)

Name BARRY BURCZYK Title MID-ATLANTIC SALES REP.

Company MATTHEWS ENVIRONMENTAL SOLUTIONS

Mailing Address/Street 2045 SPRINT BLVD.

City/Town APOPKA State FL. Telephone (813) 360-9109

8. Major Activity, Product or Service of Company at this Location

CREMATION OF HUMAN REMAINS

9. Control Devices Associated with this Equipment

None [X] 24-0

Simple/Multiple Cyclone	Spray/Adsorb Tower	Venturi Scrubber	Carbon Adsorber	Electrostatic Precipitator	Baghouse	Thermal/Catalytic Afterburner	Dry Scrubber
[ ]	[ ]	[ ]	[ ]	[ ]	[ ]	[ ]	[ ]
24-1	24-2	24-3	24-4	24-5	24-6	24-7	24-8

Other

[ ] Describe _____

24-9

10. Annual Fuel Consumption for this Equipment

OIL-1000 GALLONS	SULFUR %	GRADE	NATURAL GAS-1000 FT^3	LP GAS-100 GALLONS	GRADE
			1 1 2 3 2		
26-31	32-33	34	35-41	42-45	

COAL- TONS	SULFUR %	ASH%	WOOD-TONS	MOISTURE %
46-52	53-55	56-58	59-63	64-65

OTHER FUELS [ ] ANNUAL AMOUNT CONSUMED OTHER FUEL [ ] ANNUAL AMOUNT CONSUMED

(Specify Type) 66-1 (Specify Units of Measure) (Specify Type) 66-2 (Specify Units of Measure)

1= Coke 2= COG 3=BFG 4=Other

11. Operating Schedule (for this Equipment)

Continuous Operation	Batch Process	Hours per Batch	Batch per Week	Hours per Day	Days Per Week	Days per Year
X				1 2	6	3 1 2
67-1	67-2	68-69		70-71	72	73-75

Seasonal Variation in Operation:

No Variation	Winter Percent	Spring Percent	Summer Percent	Fall Percent	(Total Seasons= 100%)
X					
76	77-78	79-80	81-82	83-84	

12. Equivalent Stack Innformation- is Exhaust through Doors, Windows, etc. Only? (Y/N) N

85

If not, then

Height Avove Ground (FT)	Inside Diameter at Top (in)	Exit Temperature (°F)	Exit Velocity (FT/SEC)
37	20	1100	20
86-88	89-91	92-95	96-98

NOTE:
Attach a block diagram of process/process line, indicating new equipment as reported on this form and all existing equipment, including control devices and emission points.

13. Input Materials (for this equipment only)
Is any of this data to be considered confidential? N (Y or N)

NAME	CAS NO. (IF APPLICABLE)	INPUT RATE PER HOUR	UNITS	PER YEAR	UNITS
1. HUMAN REMAINS		175	lbs/hr		
2.					
3.					
4.					
5.					
6.					
7.					
8.					
9.					
TOTAL					

14. Output Materials (for this equipment)
Process/Product Stream

NAME	CAS NO. (IF APPLICABLE)	OUTPUT RATE PER HOUR	UNITS	PER YEAR	UNITS
1.					
2.					
3.					
4.					
5.					
6.					
7.					
8.					
9.					
TOTAL					

15. Waste Streams - Solid and Liquid

NAME	CAS NO. (IF APPLICABLE)	OUTPUT RATE PER HOUR	UNITS	PER YEAR	UNITS
1.					
2.					
3.					
4.					
5.					
6.					
7.					
8.					
9.					
TOTAL					

16. Total Stack Emissions (for this equipment only) in Pounds Per Operating Day

Particulate Matter	Oxides of Sulfur	Oxides of Nitrogen
4.90	2.28	3.74
99-104	105-110	111-116

Carbon Monoxide	Volatile Organic Compounds	PM-10
3.09	0.31	4.90
177-122	123-128	129-134

17. Total Fugitive Emissions (for this equipment only) in Pounds Per Operating Day

Particulate Matter	Oxides of Sulfur	Oxides of Nitrogen
135-139	140-144	145-149

Carbon Monoxide	Volatile Organic Compounds	PM-10
150-154	155-159	160-164

Method Used to Determine Emissions **(1= Estimate 2= Emission Factor 3= Stack Test 4= Other)**

TSP	SOX	NOX	CO	VOC	PM10
2	2	2	2	2	2
165	166	167	168	169	170

AIR AND RADIATION MANAGEMENT ADMINISTRATION USE ONLY

18. Date Rec'd. Local _____ **Date Rec'd. State** _____ **Return to Local Jurisdiction** Date_____ By_____

Reviewed by Local Jurisdiction Date_____ By_____ **Reviewed by State** Date_____ By_____

19. Inventory Date **Month/Year** (171-174) **Equipment Code** (175-177) **SCC Code** (178-185)

20. **Annual Operating Rate** (186-192) **Maximum Design Hourly Rate** (193-199) **Permit to Operate Month** (200-201) **Transaction Date (MM/DD/YR)** (202-207)

Staff Code (208-210) **VOC Code** (211 212) **SIP Code** (213 214) **Regulation Code** (215-218) **Confidentiality** (219)

Point Description (220-238) **Action** (239) A: Add C: Change

MARYLAND DEPARTMENT OF THE ENVIRONMENT

1800 Washington Blvd ● Baltimore, Maryland 21230
(410) 537-3230 ● 1-800-633-6101 ● www.mde.state.md.us

Air and Radiation Management Administration ● Air Quality Permits Program

SUMMARY OF DEMONSTRATIONS FOR MEETING THE AMBIENT IMPACT REQUIREMENT (26.11.15.05) AND THE T-BACT REQUIREMENT (26.11.15.06)

DO NOT WRITE IN THIS SPACE

Company Name EVANS FUNERAL CHAPEL & CREMATION SERVICE, WHITE MARSH, P.A

1. Summary of T-BACT Demonstration: List all emission reduction options considered in determining T-BACT starting with the option that reduces emissions the most. Supporting documentation **must** be attached.

Emission Reduction Option	% Emission Reduction	COSTS Capital	COSTS Annual Operating
1. > 1 Second retention time in Secondary Chamber @ 1600F	Unknown		
2. Temperature Monitor and Recorder	Unknown	3,000	100
3. No Burning of PVC plastic bags	Unknown		
4.			
5.			

2. Identify the emission reduction option selected as T-BACT and briefly explain why this is the best selection. Supporting documentation **must** be attached.

3. List screening levels and highest estimated off-site concentrations (ug/m^3) resulting from **premises-wide allowable emissions** (1) of each Toxic Air Pollutant that is covered by the regulations and discharged fromthe installation or source applying for the permit. See the General Instructions for more detail. Supporting documentation **must** be attached.

SEE DISPERSION MODEL ATTACHED

		SCREENING LEVEL(S)			OFF-SITE CONCENTRATIONS		
Toxic Air Pollutant	CAS Number	1-HR	8-HR	Annual	1-HR	8-HR	Annual
1							
2							
3							
4							
5							
6							
7							
8							
9							
10							
11							
12							
13							
14							
15							
16							

☐ If unable to use a Screening Analysis, check the box and attach the Second Tier Analysis or Special Permit request to this form.

(1) **Premises** is defined as: "all the installations or other sources that are located on contiguous or adjacent properties and that are under the control of one person or under common control of a group of persons" (COMAR 26.11.15.01B(12)).

Allowable Emissions are defined as: "the maximum emissions a source or installation is capable of discharging after consideration of any physical or operational limitations required by this subtitle or by enforceable conditions included in an applicable air quality permit to construct, permit to operate, secretarial order, plan for compliance, consent agreement, or court order" (COMAR 26.11.15.01B(2)).

MARYLAND DEPARTMENT OF THE ENVIRONMENT

Air and Radiation Management Administration • Air Quality Permits Program
1800 Washington Boulevard • Baltimore, Maryland 21230
(410)537-3225 • 1-800-633-6101• www.mde.maryland.gov

FORM 5EP: Emission Point Data

Complete one (1) Form 5EP for EACH emission point (stack or fugitive emissions) related to the proposed installation.

Applicant Name: EVANS FUNERAL CHAPEL & CREMATION SERVICES - WHITE MARSH, P.A.

1. Emission Point Identification Name/Number

List the applicant assigned name/number for this emission point and use this value on the attached required plot plan:
Unit 01 (Power Pak II Plus, IE43-PPII Plus)

2. Emission Point Description

Describe the emission point including all associated equipment and control devices:
Matthews Environmental Solutions - Nat Gas Fired Multiple Chamber cremation unit. No Add On Control Device

3. Emissions Schedule for the Emission Point

Continuous or Intermittent (C/I)?	I	**Seasonal Variation** Check box if none: ☒ Otherwise estimate seasonal variation:	
Minutes per hour:	60	Winter Percent	
Hours per day:	12	Spring Percent	
Days per week:	6	Summer Percent	
Weeks per year:	52	Fall Percent	

4. Emission Point Information

Height above ground (ft):	37	Length and width dimensions at top of rectangular stack (ft):	Length:	Width:	
Height above structures (ft):	5				
Exit temperature (°F):	1100	Inside diameter at top of round stack (ft):		1.67	
Exit velocity (ft/min):	1200	Distance from emission point to nearest property line (ft):		36.67 ft	
Exhaust gas volumetric flow rate (acfm):	2100	Building dimensions if emission point is located on building (ft)	Height 32	Length 124	Width 51.08

5. Control Devices Associated with the Emission Point

Identify each control device associated with the emission point and indicate the number of devices. ***A Form 6 is also required for each control device***. If none check none:

☒ None

☐ Baghouse No. _____

☐ Cyclone No. _____

☐ Elec. Precipitator (ESP) No. _____

☐ Dust Suppression System No. _____

☐ Venturi Scrubber No. _____

☐ Spray Tower/Packed Bed No. _____

☐ Carbon Adsorber No. _____

☐ Cartridge/Canister

☐ Regenerative

☐ Thermal Oxidizer No. _____

☐ Regenerative

☐ Catalytic Oxidizer No. _____

☐ Nitrogen Oxides Reduction No. _____

☐ Selective ☐ Non-Selective
☐ Catalytic ☐ Non-Catalytic

☐ Other No. _____
Specify:

FORM 5EP: Emission Point Data

6. Estimated Emissions from the Emission Point

Criteria Pollutants	At Design Capacity (lb/hr)	At Projected Operations		
		(lb/hr)	(lb/day)	(ton/yr)
Particulate Matter (filterable as PM10)	0.4086	0.4086	4.9	0.7649
Particulate Matter (filterable as PM2.5)	0.4086	0.4086	4.9	0.7649
Particulate Matter (condensables)	0.4086	0.4086	4.9	0.7649
Volatile Organic Compounds (VOC)	0.0261	0.0261	0.313	0.0489
Oxides of Sulfur (SOx)	0.190	0.190	2.28	0.3554
Oxides of Nitrogen (NOx)	0.3115	0.3115	3.74	0.5831
Carbon Monoxide (CO)	0.258	0.258	3.09	0.4832
Lead (Pb)				

Greenhouse Gases (GHG)	At Design Capacity (lb/hr)	At Projected Operations		
		(lb/hr)	(lb/day)	(ton/yr)
Carbon Dioxide (CO_2)				
Methane (CH_4)				
Nitrous Oxide (N_2O)				
Hydrofluorocarbons (HFCs)				
Perfluorocarbons (PFCs)				
Sulfur Hexafluoride (SF6)				
Total GHG (as CO_2e)				

List individual federal Hazardous Air Pollutants (HAP) below:	At Design Capacity (lb/hr)	At Projected Operations		
		(lb/hr)	(lb/day)	(ton/yr)

(Attach additional sheets as necessary.)

MARYLAND DEPARTMENT OF THE ENVIRONMENT
Air and Radiation Management Administration • Air Quality Permits Program
1800 Washington Boulevard • Baltimore, Maryland 21230
(410)537-3225 • 1-800-633-6101• www.mde.maryland.gov

FORM 5T: Toxic Air Pollutant (TAP) Emissions Summary and Compliance Demonstration

Applicant Name: EVANS FUNERAL CHAPEL - WHITE MARSH **SEE TOXYTOOL RESULTS ATTACHED**

Step 1: Quantify premises-wide emissions of Toxic Air Pollutants (TAP) from new and existing installations in accordance with COMAR 26.11.15.04. Attach supporting documentation as necessary.

Toxic Air Pollutant (TAP)	CAS Number	Class I or Class II?	Screening Levels (µg/m³)			Estimated Premises Wide Emissions of TAP			
						Actual Total Existing TAP Emissions	Projected TAP Emissions from Proposed Installation	Premises Wide Total TAP Emissions	
			1-hour	8-hour	Annual	(lb/hr)	(lb/hr)	(lb/hr)	(lb/yr)
ex. ethanol	*64175*	*II*	*18843*	*3769*	*N/A*	*0.60*	*0.15*	*0.75*	*1500*
ex. benzene	*71432*	*I*	*80*	*16*	*0.13*	*0.5*	*0.75*	*1.00*	*400*

(attach additional sheets as necessary.)

Note: Screening levels can be obtained from the Department's website (http://www.mde.maryland.gov) or by calling the Department.

Step 2: Determine which TAPs are exempt from further review. A TAP that meets either of the following Class I or Class II small quantity emitter exemptions is exempt from further TAP compliance demonstration requirements under Step 3 and Step 4.

Class II TAP Small Quantity Emitter Exemption Requirements (COMAR 26.11.15.03B(3)(a))
A Class II TAP is exempt from Step 3 and Step 4 if the Class II TAP meets the following requirements: Premises wide emissions of the TAP shall not exceed 0.5 pounds per hour, and any applicable 1-hour or 8-hour screening level for the TAP must be greater than 200 µg/m³.

Class I TAP Small Quantity Emitter Exemption Requirements (COMAR 26.11.15.03B(3)(b))
A Class I TAP is exempt from Step 3 and Step 4 if the Class I TAP meets the following requirements: Premises wide emissions of the TAP shall not exceed 0.5 pounds per hour and 350 pounds per year, any applicable 1-hour or 8-hour screening level for the TAP must be greater than 200 µg/m³, and any applicable annual screening level for the TAP must be greater than 1 µg/m³.

If a TAP meets either the Class I or Class II TAP Small Quantity Emitter Exemption Requirements, no further review under Step 3 and Step 4 are required for that specific TAP.

FORM 5T: Toxic Air Pollutant (TAP) Emissions Summary and Compliance Demonstration

Step 3: Best Available Control Technology for Toxics Requirement (T-BACT, COMAR 26.11.15.05)
In the following table, list all TAP emission reduction options considered when determining T-BACT for the proposed installation. The options should be listed in order beginning with the most effective control strategy to the least effective strategy. Attach supporting documentation as necessary.

Target Pollutants	Emission Control Option	% Emission Reduction	Costs		T-BACT Option Selected? (yes/no)
			Capital	Annual Operating	
ex. ethanol and benzene	*Thermal Oxidizer*	*99*	*$50,000*	*$100,000*	*no*
ex. ethanol and benzene	*Low VOC materials*	*80*	*0*	*$100.000*	*yes*

(attach additional sheets as necessary)

Step 4: Demonstrating Compliance with the Ambient Impact Requirement (COMAR 26.11.15.06)
Each TAP not exempt in Step 2 must be individually evaluated to determine that the emissions of the TAP will not adversely impact public health. The evaluation consists of a series of increasingly non-conservative (and increasingly rigorous) tests. Once a TAP passes a test in the evaluation, no further analysis is required for that TAP. "Demonstrating Compliance with the Ambient Impact Requirement under the Toxic Air Pollutant (TAP) Regulations (COMAR 26.11.15.06)" provides guidance on conducting the evaluation. Summarize your results in the following table. Attach supporting documentation as necessary.

Toxic Air Pollutant (TAP)	CAS Number	Screening Levels ($\mu g/m^3$)			Premises Wide Total TAP Emissions		Allowable Emissions Rate (AER) per COMAR 26.11.16.02A		Off-site Concentrations per Screening Analysis ($\mu g/m^3$)			Compliance Method Used?
		1-hour	8-hour	Annual	(lb/hr)	(lb/yr)	(lb/hr)	(lb/yr)	1-hour	8-hour	Annual	AER or Screen
ex. ethanol	*64175*	*18843*	*3769*	*N/A*	*0.75*	*1500*	*0.89*	*N/A*	*N/A*	*N/A*	*N/A*	*AER*
ex. benzene	*71432*	*80*	*16*	*0.13*	*1.00*	*400*	*0.04*	*36.52*	*1.5*	*1.05*	*0.12*	*Screen*

(attach additional sheets as necessary)

If compliance with the ambient impact requirement cannot be met using the allowable emissions rate method or the screening analysis method, refined dispersion modeling techniques may be required. Please consult with the Department's Air Quality Permit Program prior to conducting dispersion modeling methods to demonstrate compliance.

```
   05/11/22

   16:27:31
 ***  SCREEN3 MODEL RUN  ***
 *** VERSION DATED 13043 ***

 Evans FH (White Marsch)


 SIMPLE TERRAIN INPUTS:
    SOURCE TYPE            =        POINT
    EMISSION RATE (G/S)    =     0.126000
    STACK HEIGHT (M)       =      11.2800
    STK INSIDE DIAM (M)    =       0.5080
    STK EXIT VELOCITY (M/S)=       6.0960
    STK GAS EXIT TEMP (K)  =     866.0000
    AMBIENT AIR TEMP (K)   =     293.0000
    RECEPTOR HEIGHT (M)    =       0.0000
    URBAN/RURAL OPTION     =        URBAN
    BUILDING HEIGHT (M)    =       9.7500
    MIN HORIZ BLDG DIM (M) =      15.5700
    MAX HORIZ BLDG DIM (M) =      37.8000

 THE REGULATORY (DEFAULT) MIXING HEIGHT OPTION WAS SELECTED.
 THE REGULATORY (DEFAULT) ANEMOMETER HEIGHT OF 10.0 METERS WAS
ENTERED.


 BUOY. FLUX =    2.552 M**4/S**3;  MOM. FLUX =    0.811
M**4/S**2.

 *** FULL METEOROLOGY ***

 **********************************
 *** SCREEN AUTOMATED DISTANCES ***
 **********************************

 *** TERRAIN HEIGHT OF    0. M ABOVE STACK BASE USED FOR
```

FOLLOWING DISTANCES ***

DIST (M)	CONC (UG/M**3)	STAB	U10M (M/S)	USTK (M/S)	MIX HT (M)	PLUME HT (M)	SIGMA Y (M)	SIGMA Z (M)	DWASH
11.	0.000	0	0.0	0.0	0.0	0.00	0.00	0.00	NA
100.	36.18	6	4.0	4.1	10000.0	13.54	10.79	10.12	SS
200.	17.94	4	1.5	1.5	480.0	28.43	30.79	27.20	SS
300.	15.31	6	1.5	1.6	10000.0	28.81	31.18	20.91	SS
400.	15.24	6	1.0	1.0	10000.0	34.01	40.85	25.46	SS
500.	13.55	6	1.0	1.0	10000.0	34.01	50.21	30.39	SS
600.	11.63	6	1.0	1.0	10000.0	34.01	59.27	34.96	SS
700.	9.949	6	1.0	1.0	10000.0	34.01	68.06	39.24	SS
800.	8.570	6	1.0	1.0	10000.0	34.01	76.59	43.27	SS
900.	7.455	6	1.0	1.0	10000.0	34.01	84.89	47.09	SS
1000.	6.553	6	1.0	1.0	10000.0	34.01	92.97	50.71	SS

MAXIMUM 1-HR CONCENTRATION AT OR BEYOND 11. M:

30.	77.68	6	3.0	3.1	10000.0	11.89	3.39	5.72	SS

DWASH= MEANS NO CALC MADE (CONC = 0.0)
DWASH=NO MEANS NO BUILDING DOWNWASH USED
DWASH=HS MEANS HUBER-SNYDER DOWNWASH USED
DWASH=SS MEANS SCHULMAN-SCIRE DOWNWASH USED

```
DWASH=NA MEANS DOWNWASH NOT APPLICABLE, X<3*LB

*******************************************
*  SUMMARY OF TERRAIN HEIGHTS ENTERED FOR  *
*    SIMPLE ELEVATED TERRAIN PROCEDURE     *
*******************************************

     TERRAIN        DISTANCE RANGE (M)
      HT (M)       MINIMUM     MAXIMUM
     -------      --------    --------
          0.           11.       1000.

****************************************
     *** REGULATORY (Default) ***
    PERFORMING CAVITY CALCULATIONS
  WITH ORIGINAL SCREEN CAVITY MODEL
          (BRODE, 1988)
****************************************


 *** CAVITY CALCULATION - 1 ***       *** CAVITY CALCULATION - 2
***
   CONC (UG/M**3)     =    75.92        CONC (UG/M**3)     =
0.000
   CRIT WS @10M (M/S) =     5.86        CRIT WS @10M (M/S) =
99.99
   CRIT WS @ HS (M/S) =     6.00        CRIT WS @ HS (M/S) =
99.99
   DILUTION WS (M/S)  =     3.00        DILUTION WS (M/S)  =
99.99
   CAVITY HT (M)      =    11.71        CAVITY HT (M)      =
9.85
   CAVITY LENGTH (M)  =    30.81        CAVITY LENGTH (M)  =
19.47
   ALONGWIND DIM (M)  =    15.57        ALONGWIND DIM (M)  =
37.80

 CAVITY CONC NOT CALCULATED FOR CRIT WS > 20.0 M/S.  CONC SET =
0.0
```

```
*****************************************
      END OF CAVITY CALCULATIONS
*****************************************
```

```
*****************************************
*** SUMMARY OF SCREEN MODEL RESULTS ***
*****************************************
```

CALCULATION PROCEDURE	MAX CONC (UG/M**3)	DIST TO MAX (M)	TERRAIN HT (M)	
SIMPLE TERRAIN	77.68	30.	0.	
BLDG. CAVITY-1	75.92	31.	--	(DIST = CAVITY LENGTH)
BLDG. CAVITY-2	0.000	19.	--	(DIST = CAVITY LENGTH)

```
*****************************************************
** REMEMBER TO INCLUDE BACKGROUND CONCENTRATIONS **
*****************************************************
```

Evans Funeral Home (White Marsch)	Facility Name
Evans Funeral Home	Your Name
11-May-22	Date

HUMAN (number)	Animal (lbs)		Equivalent
1		Cremations per Hour	1.0
4		Cremations per 8-hour	4.0
3000		Cremations per year	3000.0

77.68 Screen3 maximum concentration (1 lb/hr emission rate)

Toxytool 2015

CAS	POLLUTANT	Emission Factor (EPA FIRE) (Pounds)	Emission Factor (as number) (Pounds)	MDE Screening Level 1-HOUR (ug/m3)	MDE Screening Level 8-HOUR (ug/m3)	MDE Screening Level Annual (ug/m3)	Screen3 Concentration 1-hour (ug/m3)	Screen3 Concentration 8-hour (ug/m3)	Screen3 Concentration Annual (ug/m3)	Screen3 Concentration as % of MDE Screening Level 1-hour	Screen3 Concentration as % of MDE Screening Level 8-hour	Screen3 Concentration as % of MDE Screening Level Annual
83329	Acenaphthene	1.11E-07	1.11E-07		2.03E+01	8.00E-02	8.62E-06	3.02E-06	2.36E-07		0.00	0.00
208968	Acenaphthylene	1.22E-07	1.22E-07		2.46E+01		9.48E-06	3.32E-06	2.60E-07		0.00	
120127	Anthracene	3.24E-07	3.24E-07		2.00E+01		2.52E-05	8.81E-06	6.90E-07		0.00	
7440360	Antimony	< 3.020E-5	3.02E-05		5.00E+00		2.35E-03	8.21E-04	6.43E-05		0.02	
7440382	Arsenic	< 3.000E-5	3.00E-05		1.00E-01	2.00E-04	2.33E-03	8.16E-04	6.38E-05		0.82	31.92
7440393	Barium	2.40E-05	2.40E-05		5.00E+00		1.86E-03	6.53E-04	5.11E-05		0.01	
56553	Benzo (a) anthracene	< 9.760E-9	9.76E-09				7.58E-07	2.65E-07	2.08E-08			
50328	Benzo (a) pyrene	< 2.910E-8	2.91E-08				2.26E-06	7.91E-07	6.19E-08			
205992	Benzo (b) fluoranthene	< 1.590E-8	1.59E-08				1.24E-06	4.32E-07	3.38E-08			
191242	Benzo (g,h,i) perylene	< 2.910E-8	2.91E-08		2.00E+01		2.26E-06	7.91E-07	6.19E-08		0.00	
207089	Benzo (k) fluoranthene	< 1.420E-8	1.42E-08				1.10E-06	3.86E-07	3.02E-08			
7440417	Beryllium	1.37E-06	1.37E-06		5.00E-04	4.00E-04	1.06E-04	3.72E-05	2.92E-06		7.45	0.73
7440439	Cadmium	1.11E-05	1.11E-05		2.00E-02	6.00E-04	8.62E-04	3.02E-04	2.36E-05		1.51	3.94
7440473	Chromium	2.99E-05	2.99E-05		5.00E+00		2.32E-03	8.13E-04	6.36E-05		0.02	
18540299	Chromium (VI)	1.35E-05	1.35E-05		1.00E-01	8.00E-05	1.05E-03	3.67E-04	2.87E-05		0.37	35.91
218019	Chrysene	< 5.400E-8	5.40E-08				4.19E-06	1.47E-06	1.15E-07			
7440484	Cobalt	< 1.750E-6	1.75E-06		2.00E-01		1.36E-04	4.76E-05	3.72E-06		0.02	
7440508	Copper	2.74E-05	2.74E-05		2.00E+00		2.13E-03	7.45E-04	5.83E-05		0.04	
53703	Dibenzo(a,h) anthracene	< 1.270E-8	1.27E-08				9.87E-07	3.45E-07	2.70E-08			
206440	Fluoranthene	2.05E-07	2.05E-07		8.20E+01		1.59E-05	5.57E-06	4.36E-07		0.00	
86737	Fluorene	4.17E-07	4.17E-07		2.00E+01		3.24E-05	1.13E-05	8.87E-07		0.00	
7647010	Hydrogen chloride	7.20E-02	7.20E-02	2.98E+01	1.65E+02	7.00E-01	5.59E+00	1.96E+00	1.53E-01	18.75	1.18	21.89
7664393	Hydrogen fluoride	6.55E-04	6.55E-04	1.64E+01	4.09E+00		5.09E-02	1.78E-02	1.39E-03	0.31	0.44	
193395	Indeno(1,2,3-cd)pyrene	< 1.540E-8	1.54E-08				1.20E-06	4.19E-07	3.28E-08			
7439921	Lead	6.62E-05	6.62E-05		5.00E-01		5.14E-03	1.80E-03	1.41E-04		0.36	
7439976	Mercury	3.29E-03	3.29E-03	3.00E-01	1.00E-01		2.56E-01	8.94E-02	7.00E-03	85.19	89.45	
7439987	Molybdenum	< 1.670E-5	1.67E-05		5.00E+00		1.30E-03	4.54E-04	3.55E-05		0.01	
7440020	Nickel	3.82E-05	3.82E-05		1.00E+00		2.97E-03	1.04E-03	8.13E-05		0.10	
85018	Phenanthrene	2.29E-06	2.29E-06		9.80E+00		1.78E-04	6.23E-05	4.87E-06		0.00	
129000	Pyrene	1.62E-07	1.62E-07		2.00E+01		1.26E-05	4.40E-06	3.45E-07		0.00	
7782492	Selenium	< 4.360E-5	4.36E-05		2.00E+00		3.39E-03	1.19E-03	9.28E-05		0.06	
7440224	Silver	7.30E-06	7.30E-06		1.00E-01		5.67E-04	1.98E-04	1.55E-05		0.20	
7440280	Thallium	< 8.520E-5	8.52E-05		2.00E-01		6.62E-03	2.32E-03	1.81E-04		1.16	
7440622	Vanadium	5.79E-05	5.79E-05		5.00E-01		4.50E-03	1.57E-03	1.23E-04		0.31	
7440666	Zinc	3.53E-04	3.53E-04	1.00E+03	5.00E+02		2.74E-02	9.60E-03	7.51E-04	0.00	0.00	
	PM, filterable	8.50E-02	8.50E-02				6.60E+00	2.31E+00	1.81E-01			
	Polycyclic aromatic hydrocarbons (PAH)	3.76E-06	3.76E-06				2.92E-04	1.02E-04	8.00E-06			
1746016	Total Dioxins & Furans - TEQ balanced		1.41E-09		8.20E-04	3.00E-08	1.09E-07	3.83E-08	2.99E-09		0.00	9.98

Matthews ENVIRONMENTAL SOLUTIONS

Cremator Process Flow Diagram

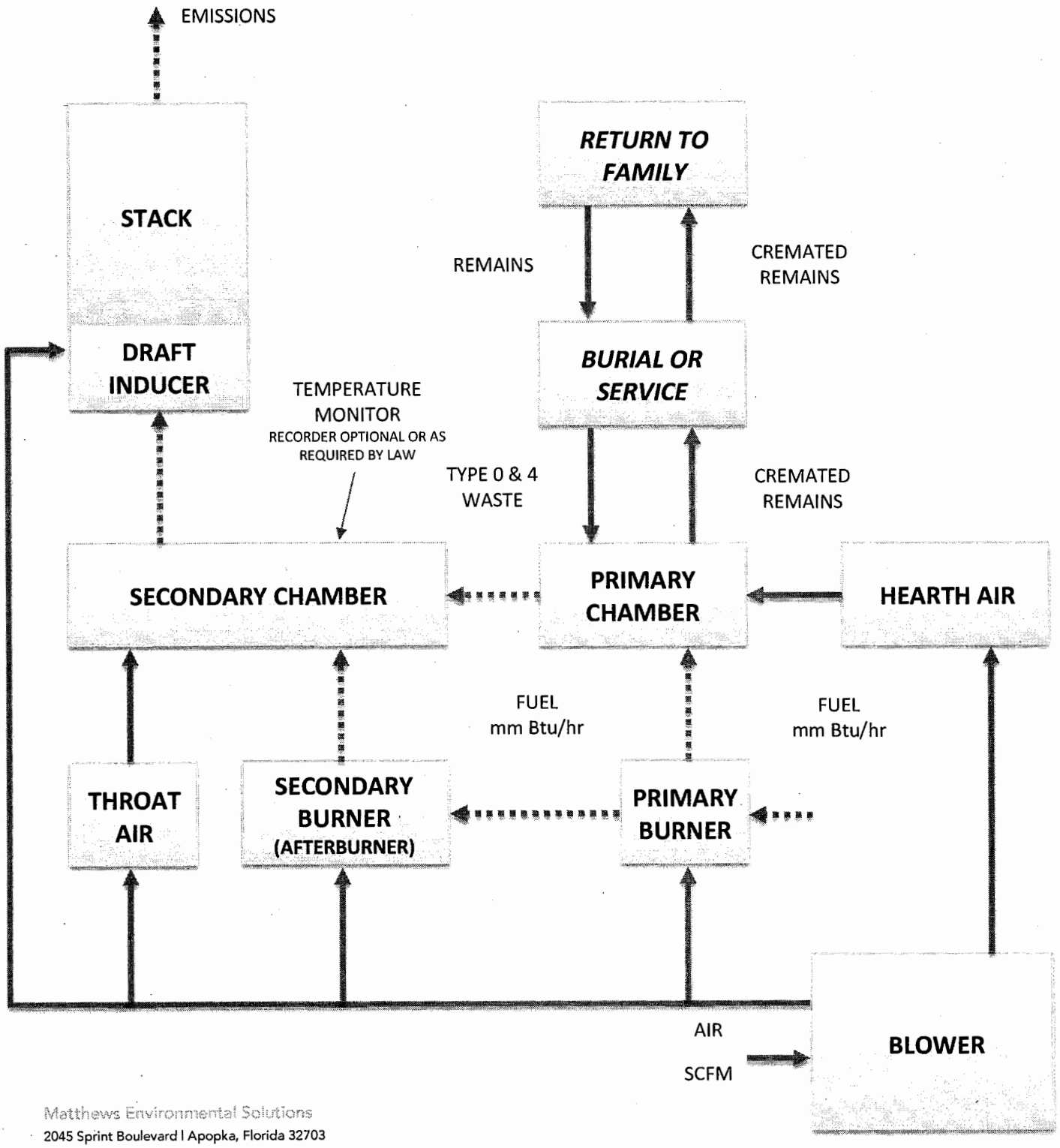

Matthews Environmental Solutions
2045 Sprint Boulevard | Apopka, Florida 32703
O: 407-886-5533 | F: 407-886-5990 | www.matthewsenvironmentalsolutions.com

SPECIFICATIONS- Model Power-Pak II Plus

1. Equipment Type ..... Model Power-Pak II Plus
   A. Model No. ..... IE43-PPII Plus
   B. Underwriters Laboratories Listing and File No. .. 87E8; MH14647

2. Dimensions
   A. Footprint ..... 12' – 9 ½ " x 5' - 9" (3.9 m x 1.8 m)
   B. Maximum Length ..... 14' – 10 ½ " (4.53 m)
   C. Maximum Width ..... 6' -10" (2.08 m)
   D. Maximum Height ..... 9' (2.74 m)
   E. Chamber Loading Opening ..... 30 ¾ " H x 43 ½ " W (781 mm x 1105 mm)

3. Weight ..... 28,000 lbs. (12,700 kg)

4. Utility/Air Requirements
   A. Gross Gas Input, Natural or LP Gas ..... 3,000,000 BTU/hr. (3,165,168 kJ/h)

   Running Gas Pressure, LP or Natural Gas ..... 11 inches (279.4 mm) water column or greater
   B. Electrical Supply ..... 230 volt, 3Ø or 1Ø, 50/60 hz (others available)
   C. Air Supply ..... 2,500 cfm (70.8 standard m^3/min)

5. Incineration Capacity ..... 175 lbs./hr. (79 kg/h)

6. Typical Loading Capacity of Waste Types ..... 750 lbs. (340.2 kg)

7. Construction and Safety Standards ..... Incineration Institute of America, Underwriters Laboratories, Canadian Standards Association

8. Steel Structure Construction
   A. Frame ..... 2" (51 mm) square tubing
   B. Front/Rear Plates ..... 3/8" (9.5 mm) plate
   C. Floor Plates ..... 3/16" (5 mm) plate
   D. Outer Side Casing ..... 12 gauge (3 mm) plate
   E. Inner Side Casing ..... 12 gauge (3 mm) plate

9. Stack Construction
   A. Inner Wall ..... 4 1/2" (110 mm) insulating firebrick or castable
   B. Outer Wall ..... 12 gauge (3 mm) sheet, Stainless Steel, welded seams (unlined stack available)

10. Draft Nozzle Construction ..... Schedule 40 Stainless Steel pipe with welded connections

11. Main Chamber Door Construction
   A. Steel Shell ..... 3/16" (5 mm) steel, welded with reinforcement
   B. Outer Refractory ..... 1" (25 mm) insulating block
   C. Inner Refractory ..... 4½" (110 mm) insulating firebrick

THIS DOCUMENT CONTAINS CONFIDENTIAL AND PROPRIETARY INFORMATION OF MATTHEWS ENVIRONMENTAL SOLUTIONS & MAY NOT BE DISCLOSED TO THIRD PARTIES WITHOUT THE WRITTEN CONSENT OF MATTHEWS. UNLESS OTHERWISE SPECIFIED IN WRITING, MATTHEWS ENVIRONMENTAL SOLUTIONS IS THE OWNER OF THIS DOCUMENT AND THE INFORMATION CONTAINED HEREIN

SPECIFICATIONS- Model Power-Pak II Plus

12. Primary Chamber Wall Construction
    - A. Outer Casing Wall ..... 12 gauge (3 mm) sheet
    - B. Inner Frame/Air Compartment ..... 2" (51 mm) air compartment
    - C. Inner Casing Wall ..... 12 gauge (3 mm) sheet
    - D. Outer Refractory Wall ..... 5" (127 mm) insulating block
    - E. Inner Refractory Wall ..... 4½" (114 mm) firebrick

13. Secondary Chamber Wall Construction
    - A. Outer Casing Wall ..... 12 gauge (3 mm) sheet
    - B. Inner Frame/Air Compartment ..... 2" (51 mm) air compartment
    - C. Inner Casing Wall ..... 12 gauge (3 mm) sheet
    - D. Outer Refractory Wall ..... 6" (152 mm) insulating block
    - E. Inner Refractory Wall ..... 4½" (114 mm) firebrick

14. Refractory Temperature Ratings
    - A. Standard Firebrick ..... 3,100° F. (1704° C)
    - B. Insulating Firebrick ..... 2,600° F. (1427° C)
    - C. Castable Refractory (Hearth) ..... 2,550° F. (1399° C)
    - D. Castable Refractory ..... 3,100° F. (1704° C)
    - E. Insulating Block ..... 1,900° F. (1038° C)
    - F. Bonding Mortar ..... 3,200° F. (1760° C)

15. Chamber Volumes (not including external flues, stacks or chimneys)
    - A. Primary Chamber ..... 70 cubic feet (2.12 m^3)
    - B. Secondary Chamber ..... 96 cubic feet (2.72 m^3)

16. Emission Control Features
    - A. Secondary Chamber with Afterburner ..... Included
    - B. Opacity Monitor and Controller with Visual and Audible Alarms ..... Included
    - C. Auxiliary Air Control System ..... Included
    - D. Microprocessor Temperature Control System ..... Included

17. Operating Temperatures
    - A. Primary Chamber ..... 32° F. - 1,800° F. (0° C - 982° C)
    - B. Secondary Chamber ..... 1,400° F. - 1,800° F. (760°C - 982°C) (as required by Env. agency)

18. Secondary Chamber Retention Time ..... > 1 second

19. Ash Removal ..... Door functions as a heat shield. Sweep out beneath front door into hopper that fills collection pan.

THIS DOCUMENT CONTAINS CONFIDENTIAL AND PROPRIETARY INFORMATION OF MATTHEWS ENVIRONMENTAL SOLUTIONS & MAY NOT BE DISCLOSED TO THIRD PARTIES WITHOUT THE WRITTEN CONSENT OF MATTHEWS. UNLESS OTHERWISE SPECIFIED IN WRITING, MATTHEWS ENVIRONMENTAL SOLUTIONS IS THE OWNER OF THIS DOCUMENT AND THE INFORMATION CONTAINED HEREIN

SPECIFICATIONS- Model Power-Pak II Plus

20. Safety Interlocks
    - A. High Gas Pressure ..... Optional
    - B. Low Gas Pressure ..... Optional
    - C. Blower Air Pressure ..... Included
    - D. Door Position ..... Included
    - E. Opacity ..... Included
    - F. Motor Starter Function ..... Included
    - G. Chamber Temperature ..... Included
    - H. Motor Overload ..... Included
    - I. Flame Quality ..... Included
    - J. Burner Safe Start ..... Included
    - K. Cremation Burner/Door Interlock ..... Available upon Env. Agency requirements

21. Burner Description ..... The nozzle mix burners used on this cremation equipment are industrial quality and designed for incinerator use.

22. Ultraviolet Flame Detection ..... Ultraviolet flame detection has proven to be the most reliable means of flame safety. The system is completely sealed in a quartz capsule to eliminate problems, caused by moisture and dust created in the cremation process, which effect flame rod detectors.

23. Operating Panel indicators
    - A. Safe Run ..... Included
    - B. Door Closed ..... Included
    - C. Pollution Alarm ..... Included
    - D. Afterburner On (Secondary Burner) ..... Included
    - E. Cremation Burner On ..... Included
    - F. Low Fire Cremation Burner On ..... Included
    - G. Afterburner (Secondary Burner) Reset ..... Included
    - H. Cremation Burner Reset ..... Included
    - I. Hearth Air ..... Included
    - J. Throat Air Off ..... Included

THIS DOCUMENT CONTAINS CONFIDENTIAL AND PROPRIETARY INFORMATION OF MATTHEWS ENVIRONMENTAL SOLUTIONS & MAY NOT BE DISCLOSED TO THIRD PARTIES WITHOUT THE WRITTEN CONSENT OF MATTHEWS. UNLESS OTHERWISE SPECIFIED IN WRITING, MATTHEWS ENVIRONMENTAL SOLUTIONS IS THE OWNER OF THIS DOCUMENT AND THE INFORMATION CONTAINED HEREIN

SPECIFICATIONS- Model Power-Pak II Plus

24. Automatic Timer Functions
    - A. Master Cycle ..... Included
    - B. Afterburner (Secondary Burner) ..... Included
    - C. Cremation Burner ..... Included
    - D. Low Fire Cremation Burner ..... Included
    - E. Hearth Air ..... Included
    - F. Throat Air ..... Included
    - G. Pollution Monitoring ..... Included
    - H. Afterburner (Secondary Burner) Prepurge ..... Included
    - I. Cremation Burner Prepurge ..... Included
    - J. Cool Down ..... Included

25. Exterior Finish
    - A. Primer ..... 2 coats rust inhibiting
    - B. Finish ..... 2 coats textured finish

26. Start-Up and Training ..... Startup of cremation equipment and training of operators to properly operate and maintain the equipment is performed on-site under actual operating conditions. Included is a comprehensive owner's manual, with details on the equipment, its components and proper operation.

27. Environmental Submittals ..... Complete technical portion of state environmental permits. Engineering calculations, technical data, existing stack test results and equipment blueprints provided.

THIS DOCUMENT CONTAINS CONFIDENTIAL AND PROPRIETARY INFORMATION OF MATTHEWS ENVIRONMENTAL SOLUTIONS & MAY NOT BE DISCLOSED TO THIRD PARTIES WITHOUT THE WRITTEN CONSENT OF MATTHEWS. UNLESS OTHERWISE SPECIFIED IN WRITING, MATTHEWS ENVIRONMENTAL SOLUTIONS IS THE OWNER OF THIS DOCUMENT AND THE INFORMATION CONTAINED HEREIN

PLOT PLAN

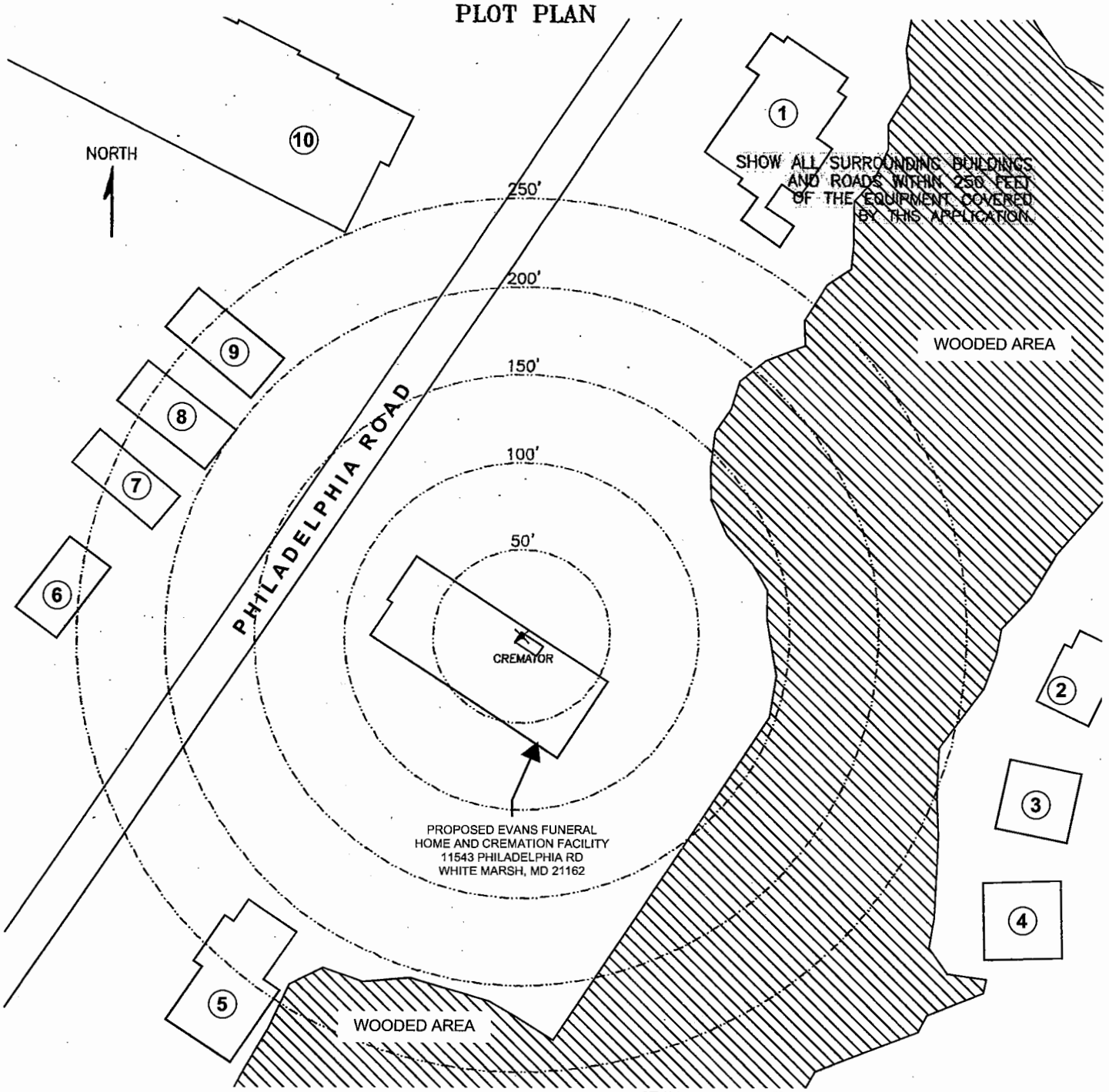

STRUCTURE	DESCRIPTION
(1)	COMMERCIAL TENANT BUILDING
(2)	SINGLE FAMILY HOME
(3)	SINGLE FAMILY HOME
(4)	SINGLE FAMILY HOME
(5)	ANIMAL HOSPITAL
(6)	SINGLE FAMILY HOME
(7)	SINGLE FAMILY HOME
(8)	SINGLE FAMILY HOME
(9)	SINGLE FAMILY HOME
(10)	SHOPPING CENTER

INSTRUCTIONS

1. INDICATE LOCATION AND TYPE OF BUILDING BY THE USE OF SMALL NUMBERED CIRCLES WITH THE DESCRIPTION BELOW.
2. SHOW ROADS AS LINES REPRESENTING THE ROAD EDGES. INDICATE STREET NAMES AND HIGHWAY NUMBERS.
3. SHOW WOODED OR CLEARED AREA BY APPROXIMATE BOUNDARY LINES AND THE WORDS "WOODS," "CLEARED," "CORNFIELD," ETC.

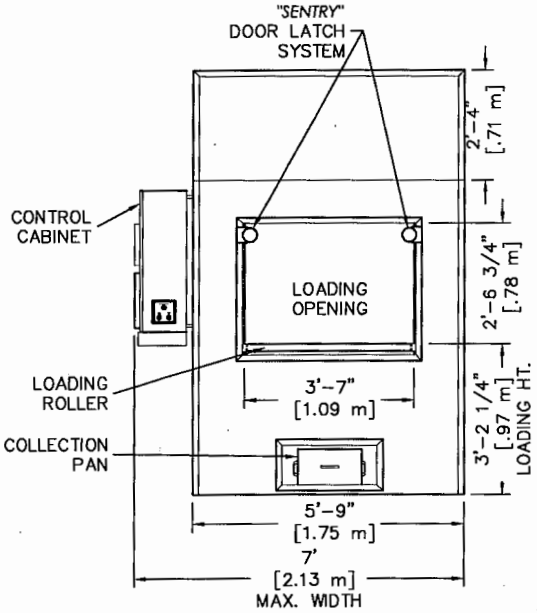

FRONT
ELEVATION

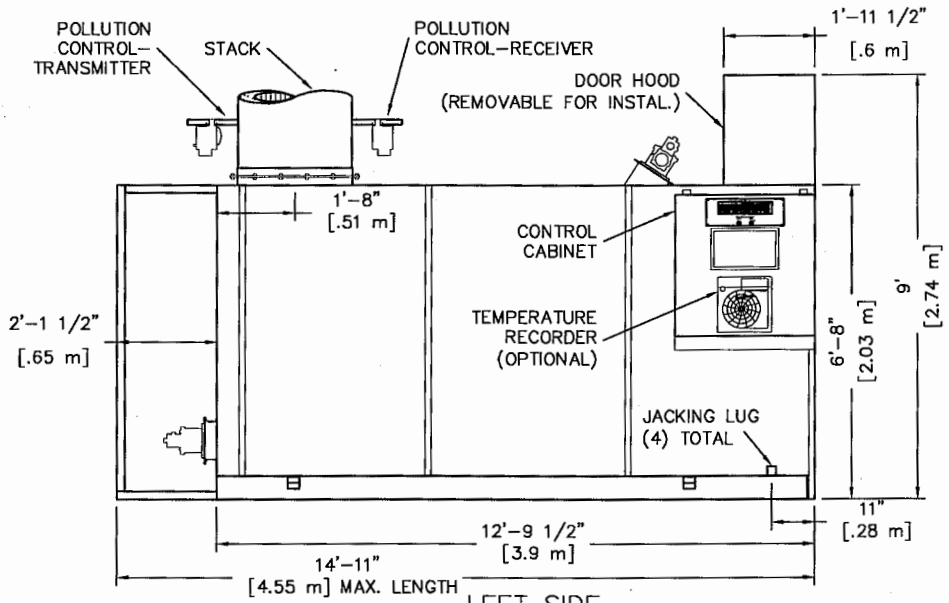

LEFT SIDE
ELEVATION

NOTES:

1) CONTROL CABINET CAN BE MOUNTED ON THE LEFT OR RIGHT SIDE, OR REMOTELY
2) MAIN ELECTRICAL CONNECTION LOCATED IN CONTROL CABINET
3) CHAMBER WIDTH IS 43" [1.09m]
4) STACK CAN BE LOCATED ON THE BACK LEFT OR BACK RIGHT OF UNIT

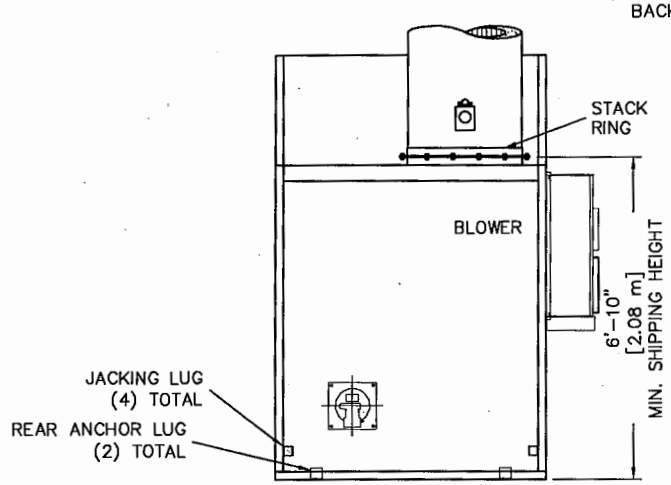

REAR
ELEVATION

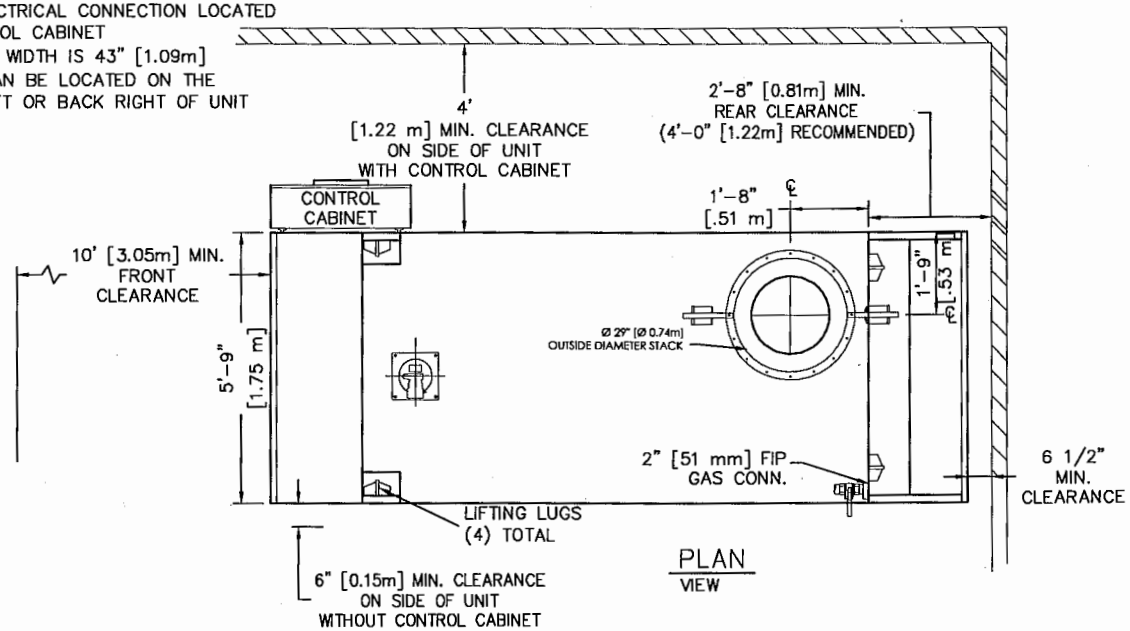

PLAN
VIEW

Q:\ENG\MCD NEW SYSTEM\OPERATIONS\PPII+\SHOP\PPII+_09-003-004.DWG

Matthews
ENVIRONMENTAL SOLUTIONS
2045 Sprint Boulevard
Apopka, Florida 32703
USA

POWER-PAK II PLUS

PLAN & ELEVATIONS INCL: CLEARANCES, REQUIREMENTS & RECOMMENDATIONS

DRAWN BY:	JG	DATE:	02.26.2015	REVISION:		
APPROVED BY:	–	DATE:	–	1	07.21.2017	REMOVE MAIN ELEC FROM TOP OF UNIT
SCALE:	1/4" = 1'-0"	SHEET:	OF:	2	09.20.2017	CHANGED MIN. FRONT CLEAR. TO 10'
DWG FILE:						
DWG NUMBER:		$(GETVAR,??)				

THIS DRAWING CONTAINS CONFIDENTIAL AND PROPRIETARY INFORMATION OF MATTHEWS ENVIRONMENTAL SOLUTIONS. UNLESS OTHERWISE SPECIFIED IN WRITING, MATTHEWS ENVIRONMENTAL SOLUTIONS IS THE OWNER OF THIS DRAWING AND THE INFORMATION CONTAINED HEREIN. THIS DRAWING AND THE CONTAINED INFORMATION IS CONFIDENTIAL, PROPRIETARY, AND MAY NOT BE REPRODUCED OR DISCLOSED TO THIRD PARTIES WITHOUT THE EXPRESS WRITTEN CONSENT OF MATTHEWS ENVIRONMENTAL SOLUTIONS. IT IS ISSUED FOR ILLUSTRATIVE PURPOSES ONLY AND IS NOT TO BE USED FOR ANY PURPOSE, INCLUDING, BUT NOT LIMITED TO, AS A CONSTRUCTION DRAWING OR FOR A REQUEST FOR BID TO A THIRD PARTY. THIS DRAWING IS PROVIDED WITHOUT ANY WARRANTY EXPRESSED OR IMPLIED. ANY USE OF THIS DRAWING WILL BE AT THE RISK AND SOLE RESPONSIBILITY OF THE USER.

CREMATOR CLEARANCES

	RECOMMENDED		MINIMUM	
TOP: (2)	2 FEET	[610 mm]	6 INCHES	[152 mm]
CABINET SIDE:	4 FEET	[1.22 m]	4 FEET	[1.22 m]
OTHER SIDE:	2 FEET	[610 mm]	6 INCHES	[152 mm]
FRONT:	10+ FEET	[3.05+ m]	10 FEET	[3.05 m]
REAR:	4 FEET	[1.22 m]	32 INCHES	[812 mm]
STACK:	6 INCHES	[152 mm]	6 INCHES	[152 mm]

1. FOR CLEARANCES OTHER THAN THOSE SHOWN, OR FOR SPECIAL REQUIREMENTS, CONSULT YOUR MES REP.

(2) FROM HIGHEST POINT ON UNIT.

3. CONTROL CABINET MOUNTS ON UNIT'S LEFT OR RIGHT SIDES, OR REMOTELY. (SEE PLAN VIEW, SHEET 1).

4. REAR OF UNIT REFERS TO THE "BACK PLATE", RATHER THAN THE BACK OF THE *"WHISPER SHIELD"*. (SEE PLAN VIEW, SHEET 1).

CREMATOR REQUIREMENTS

FUEL: A PRESSURE REGULATOR ADJUSTABLE TO 11" [279 mm] W.C. FOR NATURAL GAS AND LP GAS.

CAPACITY: 3.0 MILLION BTU/HR [3.1 MILLION KILOJOULES/HR].

ELECTRICAL: 230 VOLT, 3ø, (40A BREAKER) AND 115v (10A BREAKER), OR 230 VOLT, 1ø, (70A BREAKER) AND 115v (10A BREAKER) 50/60 HERTZ

AIR: LOUVER NEAR THE REAR OF THE UNIT CAPABLE OF PASSING 2,500 CU FT/MIN [70.8 CU M/MIN] OF FREE AIR (36" X 36") [914 mm X 914 mm].

STACK INSTALLATION INSTRUCTIONS

1. APPLY A 1/2" THICK MORTAR JOINT TO EXPOSED REFRACTORY SURFACE IN STACK RING. LOWER THE BASE STACK SECTION (B) ONTO STACK RING (A) AND FASTEN WITH HARDWARE PROVIDED (NO MORE THAN (2) STACK SECTIONS SHALL BE LIFTED TOGETHER). REPEAT PROCESS FOR REMAINING STACK SECTIONS. IF SECTIONS OF VARYING LENGTHS ARE SUPPLIED, ASSEMBLE AS TO AVOID FLANGES & LIFTING EYES INTERFERING WITH RAIN COLLAR LOCATION.

2. INSTALL STORM COLLAR ON STACK, 3" [76 mm] ABOVE NON-COMBUSTIBLE LINER (FLASHING), ALLOWING FOR PROPER VENTILATION (SEE DETAIL).

3. APPLY A 1/4" [6 mm] BEAD OF HIGH-TEMPERATURE SILICON SEALANT (PROVIDED BY MES) TO THE JOINT BETWEEN THE STORM COLLAR (C) AND THE STACK (B).

4. STORM COLLAR IS FURNISHED BY MES. THE NON-COMBUSTIBLE LINER (FLASHING) TO BE PROVIDED BY THE OTHERS.

5. IF FIFTY PERCENT OF THE STACK LENGTH IS ABOVE THE ROOF, GUY WIRES MAY BE REQUIRED. CONSULT WITH YOUR MES REP.

6. RAIN CAP NOT REQUIRED.

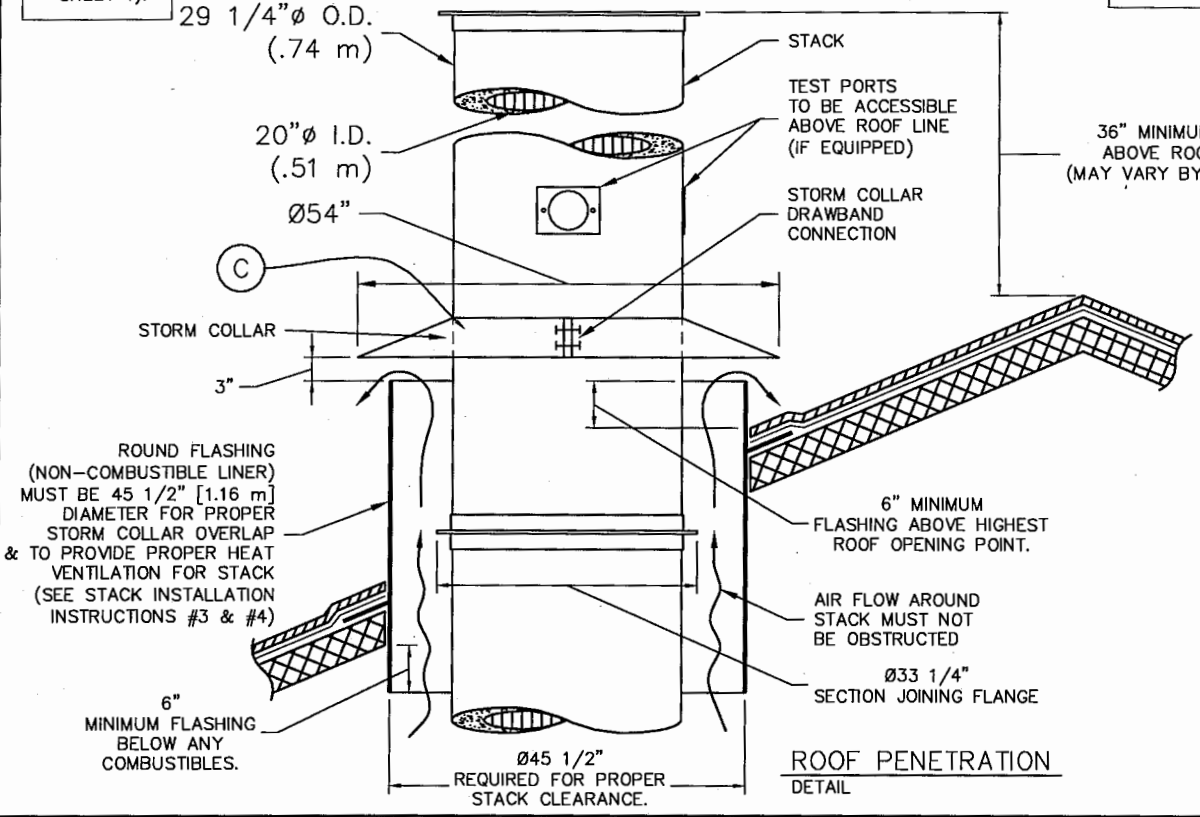

ROOF PENETRATION
DETAIL

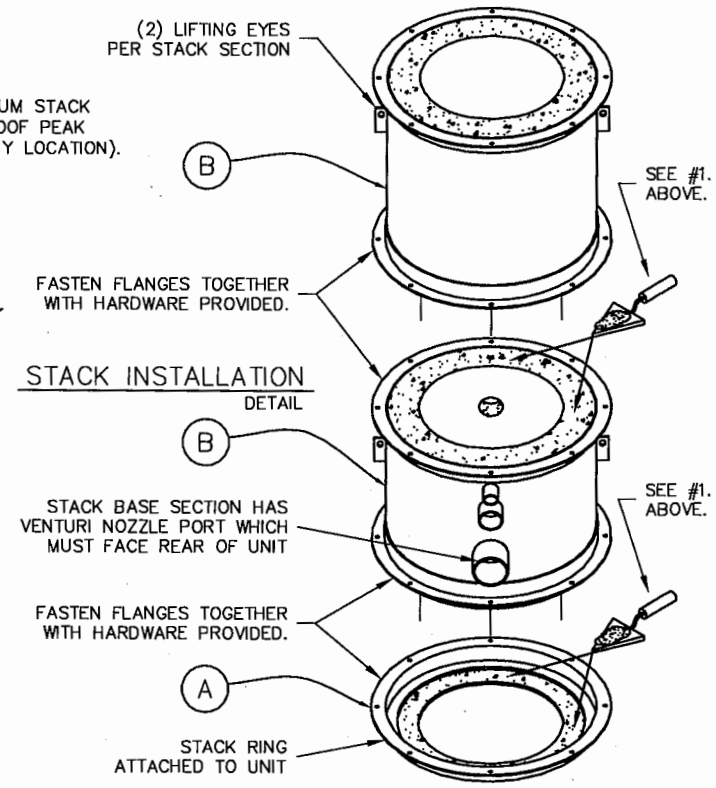

STACK INSTALLATION
DETAIL

Matthews
ENVIRONMENTAL SOLUTIONS
2045 Sprint Boulevard
Apopka, Florida 32703
USA

POWER-PAK II PLUS

STACK DETAILS, CLEARANCES & INSTALLATION INSTRUCTIONS. REFRACTORY STACK DETAIL

DRAWN BY:	JG	DATE:	03.14.2014	REVISION:	
APPROVED BY:	–	DATE:	–	1	09.20.2017 CHANGED MIN. FRONT CLEAR. TO 10'
SCALE:	1/2" = 1'-0"	SHEET:	OF:		
DWG FILE:					
DWG NUMBER:			$(GETVAR,??)		

Q:\ENG\MCD NEW SYSTEM\OPERATIONS\PPII+\SHOP\PPII+_09-006.DWG

THIS DRAWING CONTAINS CONFIDENTIAL AND PROPRIETARY INFORMATION OF MATTHEWS ENVIRONMENTAL SOLUTIONS. UNLESS OTHERWISE SPECIFIED IN WRITING, MATTHEWS ENVIRONMENTAL SOLUTIONS IS THE OWNER OF THIS DRAWING AND THE INFORMATION CONTAINED HEREIN. THIS DRAWING AND THE CONTAINED INFORMATION IS CONFIDENTIAL, PROPRIETARY, AND MAY NOT BE REPRODUCED OR DISCLOSED TO THIRD PARTIES WITHOUT THE EXPRESS WRITTEN CONSENT OF MATTHEWS ENVIRONMENTAL SOLUTIONS. IT IS ISSUED FOR ILLUSTRATIVE PURPOSES ONLY AND IS NOT TO BE USED FOR ANY PURPOSE, INCLUDING, BUT NOT LIMITED TO, AS A CONSTRUCTION DRAWING OR FOR A REQUEST FOR BID TO A THIRD PARTY. THIS DRAWING IS PROVIDED WITHOUT ANY WARRANTY EXPRESSED OR IMPLIED. ANY USE OF THIS DRAWING WILL BE AT THE RISK AND SOLE RESPONSIBILITY OF THE USER.

Calculation Of Emissions

Estimated Emission Calculation

Matthews Environmental Solutions
(previously Matthews Cremation Division)
Crematory Incinerator Model IE43-PPII Plus

Total Incenerator Burn Capacity 175 lb/hr of remains (type 4) and associated containers (type 0)
Flue gas flow rate = 1175 dscfm 12 Hours/Day X 6 Days/Week X 52 Weeks/Year
(100 % Excess Air) = 3744 Hours/Year

Total Emission Rate = Incinerator Burn Rate X Emission Factor

Sulfer Dioxide (SO_2)

$$\frac{175 \text{ lb/hr} \times 2.17 \text{ lb/ton} \times 1 \text{ ton}}{2000 \text{ lbs}} = 0.190 \text{ lb/hr} = 0.355446 \text{ TPY}$$

$$\frac{0.189875 \text{ lb/hr} \times 4.54E+05 \text{ mg/lb} \times 1 \text{ ppmv}}{1175 \text{ dscfm} \times 60 \text{ min/hr} \times 0.0283 \text{ m}^3/\text{f}^3 \times 2.61 \text{ mg/m}^3} = 16.55 \text{ ppmv}$$

Nitrogen Oxide (NOx - as Nitrogen Dioxide)

$$\frac{175 \text{ lb/hr} \times 3.56 \text{ lb/ton} \times 1 \text{ ton}}{2000 \text{ lbs}} = 0.3115 \text{ lb/hr} = 0.583128 \text{ TPY}$$

$$\frac{0.3115 \text{ lb/hr} \times 4.54E+05 \text{ mg/lb} \times 1 \text{ ppmv}}{1175 \text{ dscfm} \times 60 \text{ min/hr} \times 0.028 \text{ m}^3/\text{f}^3 \times 1.88 \text{ mg/m}^3} = 38.11 \text{ ppmv}$$

Particulates (PM & PM_{10})

$$\frac{175 \text{ lb/hr} \times 4.67 \text{ lb/ton} \times 1 \text{ ton}}{2000 \text{ lbs}} = 0.408625 \text{ lb/hr} = 0.764946 \text{ TPY}$$

$$\frac{0.408625 \text{ lb/hr} \times 7.00E+03 \text{ gr/lb}}{1175 \text{ dscfm} \times 60 \text{ min/hr}} = 0.04 \text{ gr/dscf}$$

Carbon Monoxide (CO)

$$\frac{175 \text{ lb/hr} \times 2.95 \text{ lb/ton} \times 1 \text{ ton}}{2000 \text{ lbs}} = 0.258125 \text{ lb/hr} = 0.48321 \text{ TPY}$$

$$\frac{0.258125 \text{ lb/hr} \times 4.54E+05 \text{ mg/lb} \times 1 \text{ ppmv}}{1175 \text{ dscfm} \times 60 \text{ min/hr} \times 0.028 \text{ m}^3/\text{f}^3 \times 1.14 \text{ mg/m}^3} = 52.08 \text{ ppmv}$$

Hydrocarbons (TOC/VOC - methane)

$$\frac{175 \text{ lb/hr} \times 2.99E-01 \text{ lb/ton} \times 1 \text{ ton}}{2000 \text{ lbs}} = 0.026163 \text{ lb/hr} = 0.048976 \text{ TPY}$$

$$\frac{0.0261625 \text{ lb/hr} \times 4.54E+05 \text{ mg/lb} \times 1 \text{ ppmv}}{1175 \text{ dscfm} \times 60 \text{ min/hr} \times 0.0283 \text{ m}^3/\text{f}^3 \times 0.65 \text{ mg/m}^3} = 9.16 \text{ ppmv}$$

Notes:
1. Incinerator Emissions based on EPA emissions from Table 2.3-1 and 2.3-2 of AP-42 (5th Edition)
2. All conversion factors from AP-42 Appendix A.

THIS DOCUMENT CONTAINS CONFIDENTIAL AND PROPRIETARY INFORMATION OF MATTHEWS ENVIRONMENTAL SOLUTIONS & MAY NOT BE DISCLOSED TO THIRD PARTIES WITHOUT THE WRITTEN CONSENT OF MATTHEWS. UNLESS OTHERWISE SPECIFIED IN WRITING, MATTHEWS ENVIRONMENTAL SOLUTIONS IS THE OWNER OF THIS DOCUMENT AND THE INFORMATION CONTAINED HEREIN.

CREMATOR MASS BALANCE

Matthews Environmental Solutions

PPII Plus

THESE CALCULATIONS HAVE BEEN PREPARED TO EVALUATE THE COMBUSTION PROCESS IN THIS UNIT.

THE INCINERATOR INSTITUTE OF AMERICA HAS PUBLISHED THE FOLLOWING SPECIFICATIONS COVERING AVERAGE WASTES.

WASTE TYPE	TYPE 0	TYPE 4
BTU PER POUND	8500	1000
POUND ASH PER POUND WASTE	0.05	0.05
POUND MOISTURE PER POUND WASTE	0.1	0.85
POUND COMBUSTIBLES PER POUND WASTE	0.85	0.1
HOURLY CONSUMPTION OF WASTE (LBS)	10	165

1. MASS OF PRODUCTS OF COMBUSTION FROM CONTAINER

A. COMBUSTION AIR

$\frac{8500 \text{ BTU/LB}}{100 \text{ BTU/CF OF AIR*}}$ x 0.075 LB/CF OF AIR = 6.38 LB/LB BURNED

B. COMBUSTIBLES AND WATER VAPOR FROM CHART ABOVE = 0.95 LB/LB BURNED

C. TOTAL FLUE PRODUCT MASS PER LB BURNED = 7.33 LB/LB BURNED

2. MASS OF PRODUCTS OF COMBUSTION FROM BODY

A. COMBUSTION AIR

$\frac{1000 \text{ BTU/LB}}{100 \text{ BTU/CF OF AIR*}}$ x 0.075 LB/CF OF AIR = 0.75 LB/LB BURNED

B. COMBUSTIBLES AND WATER VAPOR FROM CHART ABOVE = 0.95 LB/LB BURNED

C. TOTAL FLUE PRODUCT MASS PER LB BURNED = 1.70 LB/LB BURNED

SPECIFICATIONS	
PRIMARY BURNER FUEL CONSUMPTION (MMBTU/HR)	1
SECONDARY BURNER FUEL CONSUMPTION (MMBTU/HR)	1.2
ADDITIONAL SECONDARY AIR SUPPLIED (CFM)	200
SEC. CHAMBER OPERATING TEMPERATURE (°F)	**1600**
SECONDARY CHAMBER VOLUME (CU. FT)	96
SEC. CHAMB. CROSS-SECTIONAL AREA (SQ. FT)	2.76
FLAME PORT AREA (SQ. FT)	2.95
MIXING BAFFLES AREA (SQ. FT)	1.36

*AIR AT STANDARD CONDITIONS

3. TOTAL FLUE PRODUCTS

A. MAXIMUM PRIMARY BURNER GAS USAGE

1000000 BTU/HR x 4.8E-05 LBS/BTU = 48 LBS/HR

B. COMBUSTION AIR FOR PRIMARY BURNER

$\frac{1000000 \text{ BTU/HR}}{100 \text{ BTU/CF AIR}}$ x $\frac{1}{\text{Burner}}$ x 0.075 LB/CF AIR = 750 LBS/HR

C. MAXIMUM SECONDARY BURNER GAS USAGE

1200000 BTU/HR x 4.8E-05 LBS/BTU = 58 LBS/HOUR

THIS DOCUMENT CONTAINS CONFIDENTIAL AND PROPRIETARY INFORMATION OF MATTHEWS ENVIRONMENTAL SOLUTIONS & MAY NOT BE DISCLOSED TO THIRD PARTIES WITHOUT THE WRITTEN CONSENT OF MATTHEWS. UNLESS OTHERWISE SPECIFIED IN WRITING, MATTHEWS ENVIRONMENTAL SOLUTIONS IS THE OWNER OF THIS DOCUMENT AND THE INFORMATION CONTAINED HEREIN

D. COMBUSTION AIR FOR SECONDARY BURNER

1200000 BTU/HR	x	1	x	0.075 LB/CF AIR	=	900 LBS/HOUR
100 BTU/CF AIR		Burner				

E. PRODUCTS FROM TYPE 0 WASTE (CONTAINER)

7.33 LBS/LB BURNED	x	10 LB/HR BURN RATE	=	73 LBS/HOUR

F. PRODUCTS FROM TYPE 4 WASTE (TISSUE)

1.70 LBS/LB WASTE	x	165 LB/HR BURN RATE	=	281 LBS/HOUR

G. ADDITIONAL SECONDARY CHAMBER COMBUSTION AIR (THROAT AIR)

12000 CF/HR*	x	0.075 LB/CF AIR	=	900 LBS/HOUR

H. TOTAL FLUE PRODUCTS = 3009 LBS/HOUR

2. VELOCITY AND TIME CALCULATIONS

A. SCFM CALCULATION (PRODUCTS ASSUMED TO HAVE DENSITY CLOSE TO AIR)

3009 LBS/HR	x	13.35 STD. CU. FT/LB / 60 MIN/HR	=	670 SCFM

B. TOTAL PRODUCTS ACFM @ 1600 °F

2060 °RANKINE / 530 °RANKINE	x	669.6 CFM	=	2603 ACFM

C. RETENTION TIME

96 CU. FT / 2603 ACFM	x	60 SECONDS / 1 MINUTE	=	**2.21 SECONDS**

THIS DOCUMENT CONTAINS CONFIDENTIAL AND PROPRIETARY INFORMATION OF MATTHEWS ENVIRONMENTAL SOLUTIONS & MAY NOT BE DISCLOSED TO THIRD PARTIES WITHOUT THE WRITTEN CONSENT OF MATTHEWS. UNLESS OTHERWISE SPECIFIED IN WRITING, MATTHEWS ENVIRONMENTAL SOLUTIONS IS THE OWNER OF THIS DOCUMENT AND THE INFORMATION CONTAINED HEREIN

JOHN A. OLSZEWSKI, JR.
County Executive

PAUL M. MAYHEW
Managing Administrative Law Judge
MAUREEN E. MURPHY
Administrative Law Judge

May 16, 2022

Lawrence E. Schmidt, Esq. – lschmidt@sgs-law.com
Smith, Gildea & Schmidt
600 Washington Ave, Suite 200
Towson, MD 21204-1301

RE: Petitions for Special Hearing. Special Exception and Variance
Case No. 2022-0051-SPHXA
Property: 11543 Philadelphia Road

Dear Mr. Schmidt:

Enclosed please find a copy of the decision rendered in the above-captioned matter.

Pursuant to Baltimore County Code § 32-3-401(a), "a person aggrieved or feeling aggrieved" by this Decision and Order may file an appeal to the County Board of Appeals within thirty (30) days of the date of this Order. For further information on filing an appeal, please contact the Office of Administrative Hearings at 410-887-3868.

Sincerely,

PAUL M. MAYHEW
Managing Administrative Law Judge
for Baltimore County

PMM:dlm
Enclosure
c: Charles Evans – infor@evansfuneralchapel.com
David McMillion – dmcmillion@ceiengineering.com
Utka Akbulut – uakbulut@mca.design
Judy Carroll – jcarroll@ceiengineering.com
John Hahn – jhahn@mca.design
Merrill A. Messick – mmessick@mca.design
Anna Littleton – alittleton@mca.design
Claire Fishman – cfishman@ceiengineering.com
William Shade – lschmidt@sgs-law.com
Audrey Perkins – perkinsaudrey648@gmail.com

IN RE: PETITIONS FOR SPECIAL HEARING AND SPECIAL EXCEPTION & VARIANCE	*	BEFORE THE
(11543 Philadelphia Road)	*	OFFICE OF
10th Election District	*	ADMINISTRATIVE HEARINGS
6th Council District		
19A Newport Drive, LLC	*	FOR BALTIMORE COUNTY
Legal Owner		
	*	
Petitioner		**Case No. 2022-0051-SPHXA**

* * * * * * * * *

OPINION AND ORDER

This matter comes before the Office of Administrative Hearings ("OAH") for consideration of Petitions for Special Hearing, Special Exception and Variance filed on behalf of 19A Newport Drive, LLC, legal owner ("Petitioner"). The Special Hearing request is as follows:

1. A waiver pursuant to the Baltimore County Zoning Regulations ("BCZR") § 500.7; Parts 123 and 125 of the Baltimore County Building Code ("BCBC"); and Sections §§ 32-4-107 (a), 32-4-414, 32-8-201, et seq. and § 32-8-301, et seq. of the Baltimore County Code ("BCC") to permit a portion of the parking lot in a riverine floodplain; and

2. A request for a business parking in a residential zone, as provided in BCZR § 409.8.B;

3. A modified parking plan pursuant to BCZR § 409.12.B, and

4. For such other further relief as may be deemed necessary by the Administrative Law Judge ("ALJ") for Baltimore County.

The Petition for Special Exception seeks the following:

1. A funeral establishment pursuant to Baltimore County Zoning Regulations ("BCZR") § 230.3.;

2. For such other and further relief as may be deemed necessary by the ALJ.

A Petition for a Variance was filed:

1. From Baltimore County Zoning Regulations ("BCZR") § 409.8.A.4: To permit a distance to street line for a parking space in a surface parking facility for a nonresidential use of 9.83 ft. in lieu of the permitted 10 ft.;

2. BCZR § 409.8.A.1 (and the Landscape Manual): To permit design, screening and landscaping from a side property line to the driveway of 5.5 ft. in lieu of the permitted 10 ft.;

3. BCZR § 303.2: To permit a front yard depth of 65.5 ft. in lieu of the 90.2 ft. average depth of the front yards of the immediately adjoining lots;

4. BCZR § 409.6: To permit 52 off-street parking spaces in lieu of the 53 minimum required parking spaces;

5. BCZR § 1B01.1.B.e: To permit a parking lot with a Residential Transition Area ("RTA") buffer and setback of 15.58 ft. in lieu of the required 50 ft. buffer and 75 ft. setback, and

6. For such other and further relief as may be deemed necessary by the ALJ.

Due to the ongoing COVID-19 restrictions a public WebEx hearing was conducted virtually in lieu of an in-person hearing. The Petition was properly advertised and posted. Substantive Zoning Advisory Committee ("ZAC") comments were received from the Department of Environmental Protection and Sustainability ("DEPS"), Bureau of Development Plans Review ("DPR") and the Department of Public Works and Transportation ("DPW&T"), and the Department of Planning. The agencies did not object to the relief, subject to proposed conditions, which will be incorporated into the Order.

Charles Evans appeared on behalf of the Petitioner. Lawrence Schmidt, Esquire of Smith, Gildea and Schmidt represented the Petitioner. Judith Carroll, P.E., the engineer who prepared

and sealed the Site Plan also attended, as did David McMillion of her firm. The Site Plan was admitted as Petitioner's Exhibit 1. One member of the community attended for informational purposes.

Mr. Schmidt gave an overview of the requested relief, explaining that the site is approximately 1.3 acres and it split-zoned BL, BR, and DR 3.5. It is currently a vacant lot located on Philadelphia Road (Rte. 7) in the Honeygo Area. There is a veterinary office on one side and a vacant lot owned by Asplundh Construction Co. on the other. There is a mobile home park across the street. He explained that the proposed funeral establishment is permitted by right in the BR zone by virtue of the fact that the BR zone incorporates the BM zone's permitted uses via BCZR 236.1.A. He further explained that the BL zone permits this use by Special Exception, which is why that relief has been requested. Mr. Schmidt further explained that the front setback calculations and variance are based on the setback of the veterinary office next door. He noted that Rt. 7 is a state highway and that Petitioner's engineers have been working with the State Highway Administration ("SHA") to obtain their approval, which will entail widening the road along the frontage of this parcel. He then explained that the residences to the rear of the site generate the Residential Transition Area regulations; however, the nearest residences is 142 ft. away from this tract's boundary. He urged that the RTA variance relief is therefore within the spirit and intent of the BCZR, since the RTA would not even be generated if that dwelling was an additional 8 ft. distant.

Ms. Carroll then discussed the unique features of the site, including its dimensions and topography. She also explained that there is a riverine floodplain running through a portion of the rear of the site. However, the stream that generates this floodplain is carried *under* the site by a storm sewer pipe that was installed some time ago. She further explained that the residential

developer who developed the adjacent neighborhood to the rear of the site was required to perform a full flood study to the county in order to obtain approval for that development, and that she has submitted that study to DPW&T. She stated that she does not yet know whether they will accept this study for this project or if the Petitioner will be required to perform another floodplain study, but if that is the case they are prepared to do so. She explained that the flood plain is approximately 34 acres and that approximately one acre of the proposed parking lot would be within the floodplain.

Mr. Evans then provided a "day in the life" of the proposed funeral home's operations. He explained that there will be from two to five employees there most days, depending on what type of services are taking places. Most of their services and viewings are at 10 and 11 a.m. in the morning and then from 5 to 9 p.m. in the evening. He further explained that this will be a satellite location and that his main funeral business is in Parkville. There will be a crematory at this location but there will be no embalming of other body preparation. He identified Petitioner's Exhibit 4 as the floor plans and architectural renderings for the proposed funeral home, which depict an attractive modern two story structure of quality materials. In response to questions from the community member he explained that the crematory is regulated by the State of Maryland and must also comply with the stringent regulations of the federal Environmental Protection Agency.

SPECIAL EXCEPTION

Under Maryland law, a special exception use enjoys a presumption that it is in the interest of the general welfare, and therefore, valid. *Schultz v. Pritts*, 291 Md. 1, 11 (1981). The *Schultz* standard was revisited in *Attar v. DMS Tollgate, LLC*, 451 Md. 272 (2017), where the court of appeals discussed the nature of the evidentiary presumption in special exception cases. The court again emphasized a special exception is properly denied only when there are facts and circumstances

showing that the adverse impacts of the use at the particular location in question would be above and beyond those inherently associated with the special exception use.

The record evidence establishes that the impacts of this proposed funeral establishment at this location will have no greater impacts than are inherent in the use. Further, a significant portion of the site is zoned BR, which allows this use by right. Further, I find that the requirements of BCZR § 502.1 are satisfied. The site is located on a state highway which provides ample capacity to accommodate this business, especially with the widening that SHA is requiring. I further find that it will not overcrowd the land or interfere with adequate provisions for parks, schools, sewer, water or transportation. This two story structure will have no impacts on light or air, and the use is not inconsistent with the zoning classifications. With regard to the impacts on the environment, I find that if the DPW&T approves a floodplain study for this site then those impacts will have been addressed. In sum, I find that the Special Exception is within the spirit and intent of the BCZR and, subject to resolution of the floodplain issue, will not harm the public health, safety or welfare.

VARIANCES

A variance request involves a two-step process, summarized as follows:

(1) It must be shown the property is unique in a manner which makes it unlike surrounding properties, and that uniqueness or peculiarity must necessitate variance relief; and
(2) If variance relief is denied, Petitioner will experience a practical difficulty or hardship.

Cromwell v. Ward, 102 Md. App. 691 (1995).

As described above, the site is unique in a zoning sense. It is unique dimensions as compared with the adjoining parcels and has a fairly steep grade from the front to the rear of the site. In addition, there is a floodplain along the rear portion of the site which impacts site planning. The Petitioner would suffer practical difficulty and hardship if the variance relief is denied because

they would be unable to construct the proposed building and parking lot. Again, I find that the variances are within the spirit and intent of the BCZR and will not harm the public health, safety or welfare.

SPECIAL HEARING

Section 500.7 of the BCZR allows a property owner or any "interested person" to request an interpretation of the regulations. "A request for special hearing is, in legal effect, a request for a declaratory judgment." *Antwerpen v. Baltimore County*, 163 Md. App. 194, 877 A.2d 1166, 1175 (2005). And, "the administrative practice in Baltimore County has been to determine whether the proposed Special Hearing would be compatible with the community and generally consistent with the spirit and intent of the regulations." *Kiesling v. Long*, Unreported Opinion, No. 1485, Md. App. (Sept. Term 2016).

In the instant case, the Petitioner asks for two separate forms of relief. First, that they be allowed to have commercial parking in a residential zone under BCZR § 409.8.B, or in the alternative, for a modified parking plan under BCZR § 409.12. Second, for a waiver of the floodplain regulations in order that they can construct a portion of the required parking in a riverine floodplain. As to the parking relief, I find that with the conditions set forth below, that it can be granted within the spirit and intent of the BCZR and that it will not harm the public health, safety, or welfare.

Next, with regard to the requested floodplain waiver, I find that I am without sufficient evidence to grant this relief, if such relief can ever be granted. The ZAC Comments of the DPW&T note that there is a riverine floodplain on a portion of the property and that "a riverine flood study based on ultimate land use conditions . . . must be submitted and 'Accepted for Filing.'" Petitioner's engineer explained that they have submitted a flood plain study but DPW&T has not yet approved it, and that Petitioner may, in fact, be required to perform and

submit a new study. Further, the file does not contain a "request of a department director" for a waiver, as required by BCC § 32-4-107 (a)(1). If the DPW&T ultimately approves a flood study submitted by the Petitioner, and its Director requests the grant of a waiver then I believe the proper procedure would be for Petitioner to file another Petitioner for Special Hearing to request approval of that waiver request. In sum, as discussed at the hearing, the floodplain waiver issue is not a zoning issue, it is a development issue, and given the unresolved status of the floodplain study, it is not ripe for resolution at this time.

THEREFORE, IT IS ORDERED this **16th** day of **May 2022**, by this Administrative Law Judge, that the Petition for Special Hearing as follows: (1) A waiver pursuant to the Baltimore County Zoning Regulations ("BCZR") § 500.7; Parts 123 and 125 of the Baltimore County Building Code ("BCBC"); and §§ 32-4-107 (a), 32-4-414, 32-8-201, et seq. and § 32-8-301, et seq. of the Baltimore County Code ("BCC") to permit a portion of the parking lot in a riverine floodplain; is hereby **DENIED, WITHOUT PREJUDICE.**

IT IS FURTHER ORDERED that (1) A request for business parking in a residential zone, as provided in BCZR § 409.8.B.; and (2) A modified parking plan pursuant to BCZR § 409.12.B., are hereby **GRANTED.**

IT IS FURTHER ORDERED, that the Petition for Special Exception filed for a funeral establishment pursuant to Baltimore County Zoning Regulations ("BCZR") § 230.3, is hereby **GRANTED**.

IT IS FURTHER ORDERED, that the Petition for Variance:

1. From Baltimore County Zoning Regulations ("BCZR") § 409.8.A.4: To permit a distance to street line for a parking space in a surface parking facility for a nonresidential use of 9.83 ft. in lieu of the permitted 10 ft.;

2. BCZR § 409.8.A.1 (and the Landscape Manual): To permit design, screening and landscaping from a side property line to the driveway of 5.5 ft. in lieu of the permitted 10 ft.;

3. BCZR § 303.2: To permit a front yard depth of 65.5 ft. in lieu of the 90.2 ft. average depth of the front yards of the immediately adjoining lots;

4. BCZR § 409.6: To permit 52 off-street parking spaces in lieu of the 53 minimum required parking spaces, and

5. BCZR §1B01.1.B.e: To permit a parking lot with a Residential Transition Area (" RTA") buffer and setback of 15.58 ft. in lieu of the required 50 ft. buffer and 75 ft. setback, are all hereby **GRANTED.**

The relief granted herein shall be subject to the following:

- Petitioners may apply for necessary permits and/or licenses upon receipt of this Order. However, Petitioners are hereby made aware that proceeding at this time is at their own risk until 30 days from the date hereof, during which time an appeal can be filed by any party. If for whatever reason this Order is reversed, Petitioners would be required to return the subject property to its original condition.

- Petitioners must comply with the DEPS, DPR and DPW&T ZAC comments, copies of which are attached hereto and made a part thereof.

- Other than Petitioner's company vehicles, only passenger cars (other than buses) may use the parking facilities.

- Petitioner shall submit for approval a landscape and lighting plan that complies with the Baltimore County Landscape Manual.

- After 9:30 p.m. only security lighting will be permitted.

Any appeal of this decision must be made within thirty (30) days of the date of this Order.

PAUL M. MAYHEW
Managing Administrative Law Judge
for Baltimore County

BALTIMORE COUNTY, MARYLAND

Inter-Office Correspondence

RECEIVED
APR 0 4 2022
OFFICE OF
ADMINISTRATIVE HEARINGS

TO: Hon. Paul M. Mayhew; Managing Administrative Law Judge
Office of Administrative Hearings

FROM: Jeff Livingston, Department of Environmental Protection and Sustainability (EPS) - Development Coordination

DATE: April 4, 2022

SUBJECT: DEPS Comment for Zoning Item # 2022-0051-SPHXA
Address: 11543 Philadelphia Road
(19A Newport Drive, LLC Property)

Zoning Advisory Committee Meeting of **March 14, 2022**

X The Department of Environmental Protection and Sustainability offers the following comments on the above-referenced zoning item:

X Development of the property must comply with the Regulations for the Protection of Water Quality, Streams, Wetlands and Floodplains (Sections 33-3-101 through 33-3-120 of the Baltimore County Code).

X Development of this property must comply with the Forest Conservation Regulations (Sections 33-6-101 through 33-6-122 of the Baltimore County Code).

Additional Comments:

1. **The site plan shows an existing Forest Buffer Easement (FBE) on the property. Environmental Impact Review found no evidence there is an existing FBE on the property.**

   Reviewer: Gris Batchelder

2. **This project will require presentation to the Development Review Committee (DRC) for determination of plan process prior to issuance of any permits for Grading or Construction.**

   Reviewer: Steve Ford

BALTIMORE COUNTY, MARYLAND

INTEROFFICE CORRESPONDENCE

TO: Peter Gutwald, Director
Department of Permits, Approvals

DATE: March 24, 2022

FROM: Vishnu Desai, Supervisor for VKD 04/15/22
Bureau of Development Plans Review

SUBJECT: Zoning Advisory Committee Meeting
For March 14, 2022
Item No. 2022-0051-SPHXA

The Bureau of Development Plans Review has reviewed the subject zoning items and we have the following comments

If Special Hearing, Special Exception and Zoning Relief is granted, a Landscape Plan is required per the requirements of the Landscape Manual. A Lighting Plan is also required.

If the contributing Drainage Area is 30 acres or greater, an ultimate condition Flood Plain Sturdy is required

* * * * *

VKD: cep
cc: file

Lajuanda Whitaker

From: Terry Curtis
Sent: Friday, March 11, 2022 10:02 AM
To: PAI Zoning Advisory Committee
Cc: Peoples Counsel
Subject: ZAC Agenda Case #2022-0051-SPHXA, Philadelphia Road #11543

Good morning,

During my review of the ZAC Agenda for the distribution meeting of March 7, 2022, I reviewed an Special Hearing for case number 2022-0051-SPHXA for 11543 Philadelphia Road.

The Department of Public Works and Transportation (DPWT) Bureau of Engineering and Construction offers the following comments:

1.) A riverine flood plain meets the qualifications of a Baltimore County regulated flood plain that flows overland with the existing stream on the property. Based on Baltimore County Code 32-4-414, development in a riverine flood plain is prohibited. A riverine flood study based on ultimate land use conditions according to the Department of Permits, Approvals and Inspections Bureau of Development Plans Review Policy Manual and Department of Public Works and Transportation Design Manual must be submitted and "Accepted for Filing" by the Department of Permits, Approvals and Inspections Bureau of Development Plans Review before the approval of the Administrative Variance for the addition. In addition, Plate DF-1 located in the DPWT Design Manual must be observed.

If you have any questions please feel free to contact me anytime.

Terry Curtis, Jr.
Engineer III
Department of Public Works and Transportation
111 West Chesapeake Avenue
Room 205
Towson, Maryland 21204
410-887-3117
tcurtis@baltimorecountymd.gov

Exceptional Customer Service
Safe and Efficient Operations
Reliable Infrastructure