MARYLAND DEPARTMENT OF THE ENVIRONMENT

AIR AND RADIATION ADMINISTRATION
APPLICATION FOR A PERMIT TO CONSTRUCT

DOCKET #15-22

COMPANY: Ambrose Funeral Home & Cremation Services of Lansdowne

LOCATION: 2719 Hammonds Ferry Road, Lansdowne, MD 21227

APPLICATION: Installation of one (1) human crematory

ITEM	DESCRIPTION
1	Notice of Application and Opportunity to Request an Informational Meeting
2	Permit to Construct Application Forms
3	Zoning Approval

MARYLAND DEPARTMENT OF THE ENVIRONMENT
AIR AND RADIATION ADMINISTRATION

NOTICE OF APPLICATION AND
OPPORTUNITY TO REQUEST AN INFORMATIONAL MEETING

The Maryland Department of the Environment, Air and Radiation Administration (ARA) received a permit-to-construct application from Ambrose Funeral Home & Cremation Services of Lansdowne on August 11, 2022 for the installation of one (1) human crematory. The proposed installation will be located at 2719 Hammonds Ferry Road, Lansdowne, MD 21227.

The application and other supporting documents are available for public inspection on the Department's website. Look for Docket #15-22 at the following link:

https://mde.maryland.gov/programs/Permits/AirManagementPermits/Pages/index.aspx

Pursuant to the Environment Article, Section 1-603, Annotated Code of Maryland, the Department will hold an informational meeting to discuss the application and the permit review process if the Department receives a written request for a meeting within 10 working days from the date of the second publication of this notice. All requests for an informational meeting should be emailed to Ms. Shannon Heafey at shannon.heafey@maryland.gov.

Further information may be obtained by contacting Ms. Shannon Heafey by email at shannon.heafey@maryland.gov or by phone at (410) 537-4433.

Christopher R. Hoagland, Director
Air and Radiation Administration

August 11th, 2022

Maryland Department of the Environment
Air Quality Permits Program
1800 Washington Blvd Suite 720
Baltimore, MD 21230

Subject: **Air Construction Permit Application**
Ambrose Funeral Home & Cremation Services of Lansdowne
2719 Hammonds Ferry Road, MD 21227
US Cremation Equipment Model 100 "Classic PRO" Human Crematory

To whom it may concern:

Enclosed is one signed original of the air construction permit application for a new US Cremation Equipment Model 100 "Classic PRO" Human Crematory for the above referenced facility. The application includes a source description with Attachments 1-8 and signed applications forms.

If you have any questions or need any additional information about this application, please email meredith@grovescientific.com or call 407-298-2282 ext. 111. Should you require any information regarding the facility, please contact Joseph Ambrose at 443-858-2084.

Sincerely,
Grove Scientific & Engineering Company

Meredith Roberts, E.I.
Environmental Engineer

CC: Luis Llorens, US Cremation Equipment
Brian Gamage, US Cremation Equipment
Joseph Ambrose, Ambrose Funeral Home & Cremation Services of Lansdowne

APPLICATION FOR AIR CONSTRUCTION PERMIT

AMBROSE FUNERAL HOME & CREMATION SERVICES OF LANSDOWNE

HUMAN CREMATION FACILITY

2719 HAMMONDS FERRY ROAD

LANSDOWNE, BALTIMORE COUNTY, MD 21227

Prepared By:

GROVE SCIENTIFIC & ENGINEERING COMPANY

6140 EDGEWATER DRIVE, SUITE F

ORLANDO, FLORIDA 32810

407-298-2282

www.grovescientific.com

August 2022

Table of Contents

Background 1
Operating Capacity and Limitation 1
Physical Dimensions of Crematory Building 1
Facility-Wide Air Toxics Analysis – SCREEN3 Model 2
Emission Factors and Analysis Discussion 2
Summary of T-BACT Analysis 3
Table 1: Summary of T-BACT Demonstration 3
PVC Plastic 4
Fuel Consumption 4
Facility-Wide Emissions 4
Table 2: Summary of Burner Ratings 5

ATTACHMENTS

1. MDE Application Forms
2. Location Map & Site Plan
3. US Cremation Equipment Model “Classic PRO” Human Crematory Specifications and Engineering Drawings
4. Criteria Pollutants, TAPs Emission Calculations, and Ambient Impact Analysis
5. Stack Test Report
6. Process Flow Diagram
7. Zoning Approval Letter
8. Worker’s Compensation Coverage

SOURCE DESCRIPTION

Background

Ambrose Funeral Home & Cremation Services of Lansdowne proposes to install a new natural gas fired US Cremation Equipment Model “Classic PRO” human crematory for use at their proposed cremation facility.

Technical specifications and engineering drawings for the “Classic PRO” human cremator are included in this application. The proposed facility is located in a commercialized business area in Baltimore County at 2719 Hammonds Ferry Rd, Lansdowne, MD 21227. A location map and aerial are included in Attachment 2. A copy of the zoning approval letter from the Baltimore County is included in Attachment 7. A copy of the Worker’s Compensation Coverage is included in Attachment 8.

Operating Capacity and Limitation

The proposed crematory will operate at a capacity of 1 cremation per hour using an average body weight of 200 pounds. Equipment specifications are included in Attachment 3.

Physical Dimensions of Crematory Building

The building where the crematory will be located is 34.67 feet wide by 32.5 feet long. The building height is 18 feet tall. The stack is approximately 15 feet to the nearest property line and the stack height of the proposed crematory is 28 feet from grade.

Facility-Wide Air Toxics Analysis – SCREEN3 Model

Emission factors were obtained from the MDE Toxytool 2015 spreadsheet. The EPA SCREEN3 Model was run for the “Classic PRO” as follows:

- A proposed stack height of 28 feet above ground level
- An emission rate of 1 lb/hr (0.125998 g/s)
- A building measuring 32.5 feet wide by 34.67 feet long by 18 feet high
- A stack diameter of 0.449 meters (17.68 inches)
- An exit velocity of 18.98 ft/sec or 5.79 m/sec (average of 3 test runs from stack test dated August 18, 2020)
- Average stack temperature of 1291.4 °F or 972.8 °K (average of 3 test runs from stack test dated August 18, 2020)

Output

The SCREEN3 model resulted in the highest ground level concentration of 31.38 ug/m3 at a distance of 39 meters from the stack.

Emission Factors and Analysis Discussion

Emission were calculated using the Toxytool 2015 – TEQ-Light spreadsheet provided by MDE and are based on emission factors from AP-42 and FIRE for cremation. This tool also calculates the air toxics ground-level concentrations using data from the SCREEN3 model. A copy of this spreadsheet is included in Attachment 4. A copy of the stack test is included in Attachment 5. A process flow diagram is included in Attachment 6.

Summary of T-BACT Analysis

The "Classic PRO" Human Crematory is designed with a secondary chamber. T-BACT is achieved by controlling the "Classic PRO" Human Crematory operating factors and establishing temperature and retention time requirements and other operating requirements that will ensure an efficient and clean burn. These factors and procedures are listed above. As the TAP emissions (concentrations) from human cremation are small as shown in FIRE v6.23 and the emission calculations herein, and the relatively low capital and operation cost of the T-BACT option in Table 1, T-BACT options that deal with add on air pollution control equipment such as a lime-injected fabric filter, or scrubber are not economically feasible or practical for a human crematory.

Table 1: Summary of T-BACT Demonstration

Emission Reduction Option	% Emission Reduction	Capital Cost	Annual Operating Cost	Notes
PVC plastic burning ban, 1800ºF 2nd chamber, T_R >1.0 sec., 2nd chamber temp. monitor and recorder, natural gas fuel, operator training	>50	~$4,200.00	$18,957 to $24,000*	The "Classic PRO" Human Crematory is designed with a secondary chamber

*Based on 8,760 hours per year

Control of air pollution is achieved through the design of the "Classic PRO" crematory, including its ability to operate the secondary chamber between 1600 - 1800 degrees Fahrenheit at a residence time in excess of 1 second. The design also includes fully automatic PLC based controls, independent fuel/air systems, preheated combustion air, secondary chamber temperature

monitor a recorder, primary burner temperature interlock (prevents primary burner from firing prior to the secondary chamber reaching it's set point temperature), UV continuous scanning flame detectors on burners, and an opacity sensor which can temporarily suspends operation of the primary chamber burner. Air pollution control is demonstrated through identical source stack testing results.

PVC Plastic

Ambrose Funeral Home & Cremation Services of Lansdowne agrees to not knowingly burn PVC plastic in the human crematory as an agreement made by signing this application. The facility will use cremation boxes and pouches that contain no halogenated compounds.

Fuel Consumption

The crematory is equipped with 2 natural gas burners; a 0.5 MMBtu/hr primary and 1.5 MMBtu/hr secondary burner. With a proposed operating schedule of 8 hr/day and 2,080 hr/yr, we can calculate potential fuel usage as follows:

0.5 MMBtu/hr + 1.5 MMBtu/hr = 2.0 MMBtu/hr max

(2.0 MMBtu/hr)(1,000,000 Btu/MMBtu)(2,080 hr/yr) = 4,160,000,000 Btu/yr

(4,160,000,000 Btu/hr)/(1,000 Btu/CF) = 4,160,000 CF/yr

Facility-Wide Emissions

This facility will operate 1 human crematory (US Cremation Equipment Model 100 "Classic PRO"). The following burner ratings were applied to the criteria pollutant spreadsheet in Toxytool 2015.

Table 2: Summary of Burner Ratings

Model	Primary Burner (MMBtu/hr)	Secondary Burner (MMBtu/hr)
US Cremation Equipment Model 100 “Classic PRO”	0.5	1.5
Total	**0.5**	**1.5**

Emissions are calculated in the Toxytool 2015 spreadsheet for the crematory and summarized below.

Pollutant	Factor AP-42 & FIRE (for cremation)	Factor AP-42 (for gas burners, per hour, per MMBTU)	Emission lb/yr	Emission lb/day	Emission lb/cremation	Emission lb/hour	Emission ton/year
PM (total)	0.09	0.01	207.80	0.57	0.10	0.02	0.1039
PM (Cond.)		0.01	23.25	0.06	0.01	0.00	0.0116
PM (Filt)	0.09	0.00	184.55	0.51	0.09	0.02	0.0923
PM10			0.00	0.00	0.00	0.00	0.0000
PM2.5			0.00	0.00	0.00	0.00	0.0000
SO2	0.16	0.00	341.49	0.94	0.16	0.04	0.1707
NOx	0.26	0.10	942.40	2.58	0.45	0.11	0.4712
CO	0.22	0.08	802.27	2.20	0.39	0.09	0.4011
VOC (TOC)	0.22	0.01	488.35	1.34	0.23	0.06	0.2442
Lead		0.00	0.00	0.00	0.00	0.00	0.0000
CO2		117.65	489411.76	1340.85	235.29	55.87	244.7059
Methane		0.00	9.38	0.03	0.00	0.00	0.0047

Attachment 1

Application Forms

GROVE
SCIENTIFIC & ENGINEERING

AIR QUALITY PERMIT TO CONSTRUCT APPLICATION CHECKLIST

OWNER OF EQUIPMENT/PROCESS	
COMPANY NAME:	Ambrose Funeral Home & Cremation Services
COMPANY ADDRESS:	1328 Sulphur Spring Road Halethorpe, MD 21227-2714
LOCATION OF EQUIPMENT/PROCESS	
PREMISES NAME:	Ambrose Funeral Home & Cremation Services of Lansdowne
PREMISES ADDRESS:	2719 Hammonds Ferry Road Lansdowne, MD 21227
CONTACT INFORMATION FOR THIS PERMIT APPLICATION	
CONTACT NAME:	Joseph Ambrose
JOB TITLE:	President
PHONE NUMBER:	443-858-2084
EMAIL ADDRESS:	jusputn@gmail.com
DESCRIPTION OF EQUIPMENT OR PROCESS	
US Cremation Model US 100 "Classic PRO" Human Crematory	

Application is hereby made to the Department of the Environment for a Permit to Construct for the following equipment or process as required by the State of Maryland Air Quality Regulation, COMAR 26.11.02.09.

Check each item that you have submitted as part of your application package.

☒ Application package cover letter describing the proposed project

☒ Complete application forms (Note the number of forms included or NA if not applicable.)

No. 3 Form 5
No. 3 Form 5T
No. ____ Form 5EP
No. ____ Form 6
No. 3 Form 10
No. ____ Form 11
No. ____ Form 41
No. ____ Form 42
No. ____ Form 44

☒ Vendor/manufacturer specifications/guarantees

☒ Evidence of Workman's Compensation Insurance

☒ Process flow diagrams with emission points

☒ Site plan including the location of the proposed source and property boundary

☐ Material balance data and all emissions calculations

☐ Material Safety Data Sheets (MSDS) or equivalent information for materials processed and manufactured.

☐ Certificate of Public Convenience and Necessity (CPCN) waiver documentation from the Public Service Commission (1)

☒ Documentation that the proposed installation complies with local zoning and land use requirements (2)

(1) Required for emergency and non-emergency generators installed on or after October 1, 2001 and rated at 2001 kW or more.

(2) Required for applications subject to Expanded Public Participation Requirements.

MARYLAND DEPARTMENT OF THE ENVIRONMENT
Air and Radiation Management Administration ▪ Air Quality Permits Program
1800 Washington Blvd ▪ Baltimore, Maryland 21230
(410) 537-3230 ▪ 1-800-633-6101 ▪ www.mde.state.md.us

APPLICATION FOR FUEL BURNING EQUIPMENT

Information Regarding Public Outreach

For Air Quality Permit to Construct applications subject to public review, applicants should consider the following information in the initial stages of preparing a permit application.

If you are not sure at the time you are applying for a permit whether public review of your application is required or for information on steps you can take to engage the surrounding community where your planned project will be located, please contact the Air Quality Permits Program at 410-537-3225 and seek their advice.

Communicating and engaging the local community as early as possible in your planning and development process is an important aspect of your project and should be considered a priority. Environmental Justice or "EJ" is a movement to inform, involve, and engage communities impacted by potential and planned environmental projects by affording citizens opportunities to learn about projects and discuss any concerns regarding impacts.

Although some permit applications are subject to a formal public review process prescribed by statute, the Department strongly encourages you to engage neighboring communities separate from and well ahead of the formal permitting process. Sharing your plans by way of community meetings, informational outreach at local gatherings or through local faith-based organizations can initiate a rewarding and productive dialogue that will reduce anxiety and establish a permanent link with your neighbors in the community.

All parties benefit when there is good communication. The Department can assist applicants in developing an outreach plan that fits the needs of both the company and the public.

MARYLAND DEPARTMENT OF THE ENVIRONMENT

1800 Washington Blvd ▪ Baltimore, Maryland 21230
(410) 537-3230 ▪1-800-633-6101 ▪ www.mde.state.md.us

Air and Radiation Management Administration ▪ Air Quality Permits Program

APPLICATION FOR PROCESSING/MANUFACTURING EQUIPMENT

Permit to Construct ☒ Registration Update ☐ Initial Registration ☐

1A. Owner of Equipment/Company Name

Ambrose Funeral Home & Cremation Services

Mailing Address

1328 Sulphur Spring Road
Street Address

Halethorpe | MD | 21227
City | State | Zip

Telephone Number

(443) 858-2084

Signature

Joseph Ambrose, President
Print Name and Title

8/11/22
Date

DO NOT WRITE IN THIS BLOCK
2. REGISTRATION NUMBER

County No. (1-2) | Premises No. (3-6)
Registration Class (7) | Equipment No. (8-11)
Data Year (12-13) | Application Date

1B. Equipment Location and Telephone Number (if different from above)

2719 Hammonds Ferry Road
Street Number and Street Name

Lansdowne | MD | 21227 | (410) 242-2211
City/Town | State | Zip | Telephone Number

Ambrose Funeral Home & Cremation Services of Lansdowne
Premises Name (if different from above)

3. Status (A= New, B= Modification to Existing Equipment, C= Existing Equipment)

Status (15)	New Construction Begun (MM/YY) (16-19)	New Construction Completed (MM/YY) (20-23)	Existing Initial Operation (MM/YY) (20-23)
A	0123	0123	

4. Describe this Equipment: Make, Model, Features, Manufacturer (include Maximum Hourly Input Rate, etc.)

US Cremation Equipment Model US 100 "Classic PRO" (see attached equipment specifications for details)

5. Workmen's Compensation Coverage EIG 486077700 (Binder/Policy Number) 11/01/2022 (Expiration Date)

Company Ambrose Funeral Home & Cremation Services

NOTE: Before a Permit to Construct may be issued by the Department, the applicant must provide the Department with proof of worker's compensation coverage as required under Section 1-202 of the Worker's Compensation Act.

6A. Number of Pieces of Identical Equipment Units to be Registered/Permitted at this Time 0

6B. Number of Stack/Emission Points Associated with this Equipment 0

7. Person Installing this Equipment (if different from Number 1 on Page 1)

Name N/A Title N/A

Company US Cremation Equipment

Mailing Address/Street 2814 Silver Star Road Suite 201-D

City/Town Orlando State FL Telephone (321) 282-7357

8. Major Activity, Product or Service of Company at this Location

Funeral and cremation services for the Baltimore County area.

9. Control Devices Associated with this Equipment

None [ ] 24-0

Simple/Multiple Cyclone	Spray/Adsorb Tower	Venturi Scrubber	Carbon Adsorber	Electrostatic Precipitator	Baghouse	Thermal/Catalytic Afterburner	Dry Scrubber
[ ]	[ ]	[ ]	[ ]	[ ]	[ ]	[ ]	[ ]
24-1	24-2	24-3	24-4	24-5	24-6	24-7	24-8

Other

[X] Describe Secondary combustion chamber

24-9

10. Annual Fuel Consumption for this Equipment

OIL-1000 GALLONS	SULFUR %	GRADE	NATURAL GAS-1000 FT^3	LP GAS-100 GALLONS	GRADE
			4,160		
26-31	32-33	34	35-41	42-45	

COAL- TONS	SULFUR %	ASH%	WOOD-TONS	MOISTURE %
46-52	53-55	56-58	59-63	64-65

OTHER FUELS [ ] ANNUAL AMOUNT CONSUMED

(Specify Type) 66-1 (Specify Units of Measure)

OTHER FUEL [ ] ANNUAL AMOUNT CONSUMED

(Specify Type) 66-2 (Specify Units of Measure)

1= Coke 2= COG 3=BFG 4=Other

11. Operating Schedule (for this Equipment)

Continuous Operation	Batch Process	Hours per Batch	Batch per Week	Hours per Day	Days Per Week	Days per Year
X				08	5	260
67-1	67-2	68-69		70-71	72	73-75

Seasonal Variation in Operation:

No Variation	Winter Percent	Spring Percent	Summer Percent	Fall Percent
X				
76	77-78	79-80	81-82	83-84

(Total Seasons= 100%)

12. Equivalent Stack Innformation- is Exhaust through Doors, Windows, etc. Only? (Y/N) N

85

If not, then

Height Avove Ground (FT)	Inside Diameter at Top	Exit Temperature (°F)	Exit Velocity (FT/SEC)
28	17 in	1,291	18.9
86-88	89-91	92-95	96-98

NOTE:
Attach a block diagram of process/process line, indicating new equipment as reported on this form and all existing equipment, including control devices and emission points.

13. Input Materials (for this equipment only)
Is any of this data to be considered confidential? N (Y or N)

INPUT RATE

NAME	CAS NO. (IF APPLICABLE)	PER HOUR	UNITS	PER YEAR	UNITS
1. Human remains and container		200	lbs	208	tons
2.					
3.					
4.					
5.					
6.					
7.					
8.					
9.					
TOTAL					

14. Output Materials (for this equipment)
Process/Product Stream

OUTPUT RATE

NAME	CAS NO. (IF APPLICABLE)	PER HOUR	UNITS	PER YEAR	UNITS
1. Ash					
2.					
3.					
4.					
5.					
6.					
7.					
8.					
9.					
TOTAL					

15. Waste Streams- Solid and Liquid

OUTPUT RATE

NAME	CAS NO. (IF APPLICABLE)	PER HOUR	UNITS	PER YEAR	UNITS
1. Ash					
2.					
3.					
4.					
5.					
6.					
7.					
8.					
9.					
TOTAL					

16. Total Stack Emissions (for this equipment only) in Pounds Per Operating Day

Particulate Matter	Oxides of Sulfur	Oxides of Nitrogen
0.57	0.94	2.58
99-104	105-110	111-116

Carbon Monoxide	Volatile Organic Compounds	PM-10
2.20	1.34	0.00
177-122	123-128	129-134

17. Total Fugitive Emissions (for this equipment only) in Pounds Per Operating Day N/A

Particulate Matter	Oxides of Sulfur	Oxides of Nitrogen
135-139	140-144	145-149

Carbon Monoxide	Volatile Organic Compounds	PM-10
150-154	155-159	160-164

Method Used to Determine Emissions **(1= Estimate 2= Emission Factor 3= Stack Test 4= Other)**

TSP	SOX	NOX	CO	VOC	PM10
2	2	2	2	2	2
165	166	167	168	169	170

AIR AND RADIATION MANAGEMENT ADMINISTRATION USE ONLY

18. Date Rec'd. Local _____ **Date Rec'd. State** _____ **Return to Local Jurisdiction** **Date**_____ **By**_____

Reviewed by Local Jurisdiction Date_____ By_____ **Reviewed by State** Date_____ By_____

19. Inventory Date **Month/Year** (171-174) **Equipment Code** (175-177) **SCC Code** (178-185)

20. Annual Operating Rate (186-192) **Maximum Design Hourly Rate** (193-199) **Permit to Operate Month** (200-201) **Transaction Date (MM/DD/YR)** (202-207)

Staff Code (208-210) **VOC Code** (211 212) **SIP Code** (213 214) **Regulation Code** (215-218) **Confidentiality** (219)

Point Description (220-238) **Action** (239) A: Add C: Change

MARYLAND DEPARTMENT OF THE ENVIRONMENT
Air and Radiation Management Administration ● Air Quality Permits Program
1800 Washington Boulevard ● Baltimore, Maryland 21230
(410)537-3225 ● 1-800-633-6101● www.mde.maryland.gov

FORM 5T: Toxic Air Pollutant (TAP) Emissions Summary and Compliance Demonstration

Applicant Name: Ambrose Funeral Home & Cremation Services of Lansdowne

Step 1: Quantify premises-wide emissions of Toxic Air Pollutants (TAP) from new and existing installations in accordance with COMAR 26.11.15.04. Attach supporting documentation as necessary.

Toxic Air Pollutant (TAP)	CAS Number	Class I or Class II?	Screening Levels (µg/m^3)			Estimated Premises Wide Emissions of TAP			
						Actual Total Existing TAP Emissions	Projected TAP Emissions from Proposed Installation	Premises Wide Total TAP Emissions	
			1-hour	8-hour	Annual	(lb/hr)	(lb/hr)	(lb/hr)	(lb/yr)
ex. ethanol	*64175*	*II*	*18843*	*3769*	*N/A*	*0.60*	*0.15*	*0.75*	*1500*
ex. benzene	*71432*	*I*	*80*	*16*	*0.13*	*0.5*	*0.75*	*1.00*	*400*
See attached source description									

(attach additional sheets as necessary.)

Note: Screening levels can be obtained from the Department's website (http://www.mde.maryland.gov) or by calling the Department.

Step 2: Determine which TAPs are exempt from further review. A TAP that meets either of the following Class I or Class II small quantity emitter exemptions is exempt from further TAP compliance demonstration requirements under Step 3 and Step 4.

Class II TAP Small Quantity Emitter Exemption Requirements (COMAR 26.11.15.03B(3)(a))
A Class II TAP is exempt from Step 3 and Step 4 if the Class II TAP meets the following requirements: Premises wide emissions of the TAP shall not exceed 0.5 pounds per hour, and any applicable 1-hour or 8-hour screening level for the TAP must be greater than 200 µg/m^3.

Class I TAP Small Quantity Emitter Exemption Requirements (COMAR 26.11.15.03B(3)(b))
A Class I TAP is exempt from Step 3 and Step 4 if the Class I TAP meets the following requirements: Premises wide emissions of the TAP shall not exceed 0.5 pounds per hour and 350 pounds per year, any applicable 1-hour or 8-hour screening level for the TAP must be greater than 200 µg/m^3, and any applicable annual screening level for the TAP must be greater than 1 µg/m^3.

If a TAP meets either the Class I or Class II TAP Small Quantity Emitter Exemption Requirements, no further review under Step 3 and Step 4 are required for that specific TAP.

FORM 5T: Toxic Air Pollutant (TAP) Emissions Summary and Compliance Demonstration

Step 3: Best Available Control Technology for Toxics Requirement (T-BACT, COMAR 26.11.15.05)
In the following table, list all TAP emission reduction options considered when determining T-BACT for the proposed installation. The options should be listed in order beginning with the most effective control strategy to the least effective strategy. Attach supporting documentation as necessary.

Target Pollutants	Emission Control Option	% Emission Reduction	Costs		T-BACT Option Selected? (yes/no)
			Capital	Annual Operating	
ex. ethanol and benzene	*Thermal Oxidizer*	*99*	*$50,000*	*$100,000*	*no*
ex. ethanol and benzene	*Low VOC materials*	*80*	*0*	*$100.000*	*yes*
See attached air toxics analysis					

(attach additional sheets as necessary)

Step 4: Demonstrating Compliance with the Ambient Impact Requirement (COMAR 26.11.15.06)
Each TAP not exempt in Step 2 must be individually evaluated to determine that the emissions of the TAP will not adversely impact public health. The evaluation consists of a series of increasingly non-conservative (and increasingly rigorous) tests. Once a TAP passes a test in the evaluation, no further analysis is required for that TAP. "Demonstrating Compliance with the Ambient Impact Requirement under the Toxic Air Pollutant (TAP) Regulations (COMAR 26.11.15.06)" provides guidance on conducting the evaluation. Summarize your results in the following table. Attach supporting documentation as necessary.

Toxic Air Pollutant (TAP)	CAS Number	Screening Levels ($\mu g/m^3$)			Premises Wide Total TAP Emissions		Allowable Emissions Rate (AER) per COMAR 26.11.16.02A		Off-site Concentrations per Screening Analysis ($\mu g/m^3$)			Compliance Method Used?
		1-hour	8-hour	Annual	(lb/hr)	(lb/yr)	(lb/hr)	(lb/yr)	1-hour	8-hour	Annual	AER or Screen
ex. ethanol	*64175*	*18843*	*3769*	*N/A*	*0.75*	*1500*	*0.89*	*N/A*	*N/A*	*N/A*	*N/A*	*AER*
ex. benzene	*71432*	*80*	*16*	*0.13*	*1.00*	*400*	*0.04*	*36.52*	*1.5*	*1.05*	*0.12*	*Screen*
See attached air toxics analysis												

(attach additional sheets as necessary)

If compliance with the ambient impact requirement cannot be met using the allowable emissions rate method or the screening analysis method, refined dispersion modeling techniques may be required. Please consult with the Department's Air Quality Permit Program prior to conducting dispersion modeling methods to demonstrate compliance.

MARYLAND DEPARTMENT OF THE ENVIRONMENT
1800 Washington Blvd ▪ Baltimore, Maryland 21230
(410) 537-3230 ▪ 1-800-633-6101 ▪ www.mde.state.md.us

Air and Radiation Management Administration ▪ Air Quality Permits Program

APPLICATION FOR INCINERATORS

Permit to Construct ☒ Registration ☐

DO NOT WRITE IN THIS SPACE
Date Rec. Local / Date Red. State
Acknowledgement Sent Date_____ By_____
Reviewed Name_____ Date_____
Local State
Returned to Local Jurisdiction Date_____ By_____
Application Returned to Applicant Date_____ By_____
Premises Number 1 2 3 4 5 6 Registration Number 7 8 9 10 11 12 13

1. Owner of Installation or Company Name: Ambrose Funeral Home & Cremation Services
Date of Application: 8/11/22
Mailing Address: 1328 Sulphur Spring Road
Telephone: 410-242-2211
City: Halethorpe State: MD Zip Code: 21227

2A. Premises Name if Different from Above: Ambrose Funeral Home & Cremation Services of Lansdowne

2B. Incinerator Location if Different From Above (give Street Address, City, County and Zip Code):
2719 Hammonds Ferry Road, Lansdowne, Baltimore County, MD 21227

3. Owner, Agent or Authorized Company Official
Joseph Ambrose
(Print/Type Name)
(Signature)
1328 Sulphur Spring Road Halethorpe, MD 21227
(Mailing Address, City/Town, State, Zip Code)

4A. New Construction Only
Begin 01/23
Date Construction Completed 01/23

4B. Existing Installation
Initial Operation Date
_____
(14-15)

5. Installation or Contractor (New or Replacement Only)
US Cremation Equipment
(Name or Company Title)
2814 Silver Star Road Suite 201-D Orlando, FL 32808 321-282-7357
(Mailing Address, City/Town, State, Zip Code, Telephone Number)

6. Equipment Manufacturer: US Cremation Equipment
Manufacturer's Serial or Catalog No.: Model US 100 "Classic PRO"

7. Total Number of Incinerators of Identical Design and Capacity at this Location: 0

8. Major Activity at this Location-Auto Dealer, Hospital, Apartment House, etc.
Funeral and cremation services for the Baltimore County area.

9. Rated Capacity of Incinerator in lb/hr: 200
16-19

10. Incinerator Type (Mark only one with X)
Single Chamber (20-1) Multiple Chamber X (20-2) Auxiliary Burner (21) Other (22) _____ Specify

11. Frequency of Burning
Hours/Day 0 8 (23 24) Days/Year 2 6 0 (25 26 27)

12. Amount of Waste Burned Per Operating Day: 1,600
Units: tons ☐ (32-1) lbs. X (32-2) gal. ☐ (32-3)

13. Method of Charging Waste into Unit: Manual X Automatic ☐

Form number: 10
Revision date: 09/27/2002
TTY Users 1-800-735-2258

Recycled Paper

14. Type of Waste/Refuse Incinerated. Mark major type with ✗ -- all others with Check ✓.

Trash 100% Dry [ ] 33 | Refuse 20% Garbage [ ] 34 | Refuse 50% Garbage [ ] 35 | Garbage [ ] 36 | Animal or Animal Parts [ ] 37 | Municipal Refuse [ ] 38 | Infectious/ Pathological [ ] 39

Does this waste contain Carcinogenic or Toxic Material? Y/N Industrial Process Waste [ ] 40 _____ Other [X] 41 Human remains

15. Total Annual Auxiliary Fuels Used

Oil _____ (gallons) _____ Natural Gas 4,160,000 (ft^3)
42-47 (Grade) 48 49-55

LP Gas _____ (gallons) Other [ ] _____ specify fuel & units required
56-59 90-92

16. Stack Information: Height Above Ground (ft) 28 Inside Diameter at Top (in) 17
94-96 97-99

Exit Temperature (°F) 1,291 Gas Exit Velocity (ft/min) 1,139
100-103 104-107

17. Emission Control Devices

Gas Cleaning Form AMA-6 Must be Completed for Each Device Used and Attached to this Application.

None [ ] 108 | Settling Chamber or Baffles [ ] 109 | Simple Cyclone [ ] 110 | Multiple Cyclone [ ] 111 | Scrubber [ ] 112 | Venturi Scrubber [ ] 113 | Electrostatic Precipitator [ ] 114 | Bag-house [ ] 115 | After-burner [ ] 116

Other [X] Secondary combustion chamber 117-118 Specify Type

DO NOT WRITE BELOW THIS LINE

18. Actual Stack Emissions in Pounds per Operating Day

Particulate Matter [ ] 119–124 Oxides of Sulfur [ ] 125–130 Oxides of Nitrogen [ ] 131–136

Carbon Monoxide [ ] 137–142 Volatile Organic Compounds [ ] 143–148

Other Pollutants Specify _____ Type/Amount

19. Inventory Date [ ] 180–183

20. Method Used to Determine Emissions

	Estimate	Emission Factor	Stack Test	Other
Particulate matter	[ ] 184-1	[ ] -2	[ ] -3	[ ] -4
Oxides of Nitrogen	[ ] 186-1	[ ] -2	[ ] -3	[ ] -4
Volatile Organics	[ ] 188-1	[ ] -2	[ ] -3	[ ] -4
Oxides of Sulfur	[ ] 185-1	[ ] -2	[ ] -3	[ ] -4
Carbon Monoxide	[ ] 187-1	[ ] -2	[ ] -3	[ ] -4

21. Premises Information Premises Name _____

Census Tract [ ] 243–248 SIC No. [ ] 249–252 MD Grid East [ ] 253–256 MD Grid North [ ] 257–259

Owner: Private [ ] 260-0 | Local [ ] 260-1 | State [ ] 260-2 | Federal [ ] 260-3

Date Completed _____

Completed By _____

Attachment 2

Location Map & Site Plan

GROVE
SCIENTIFIC & ENGINEERING

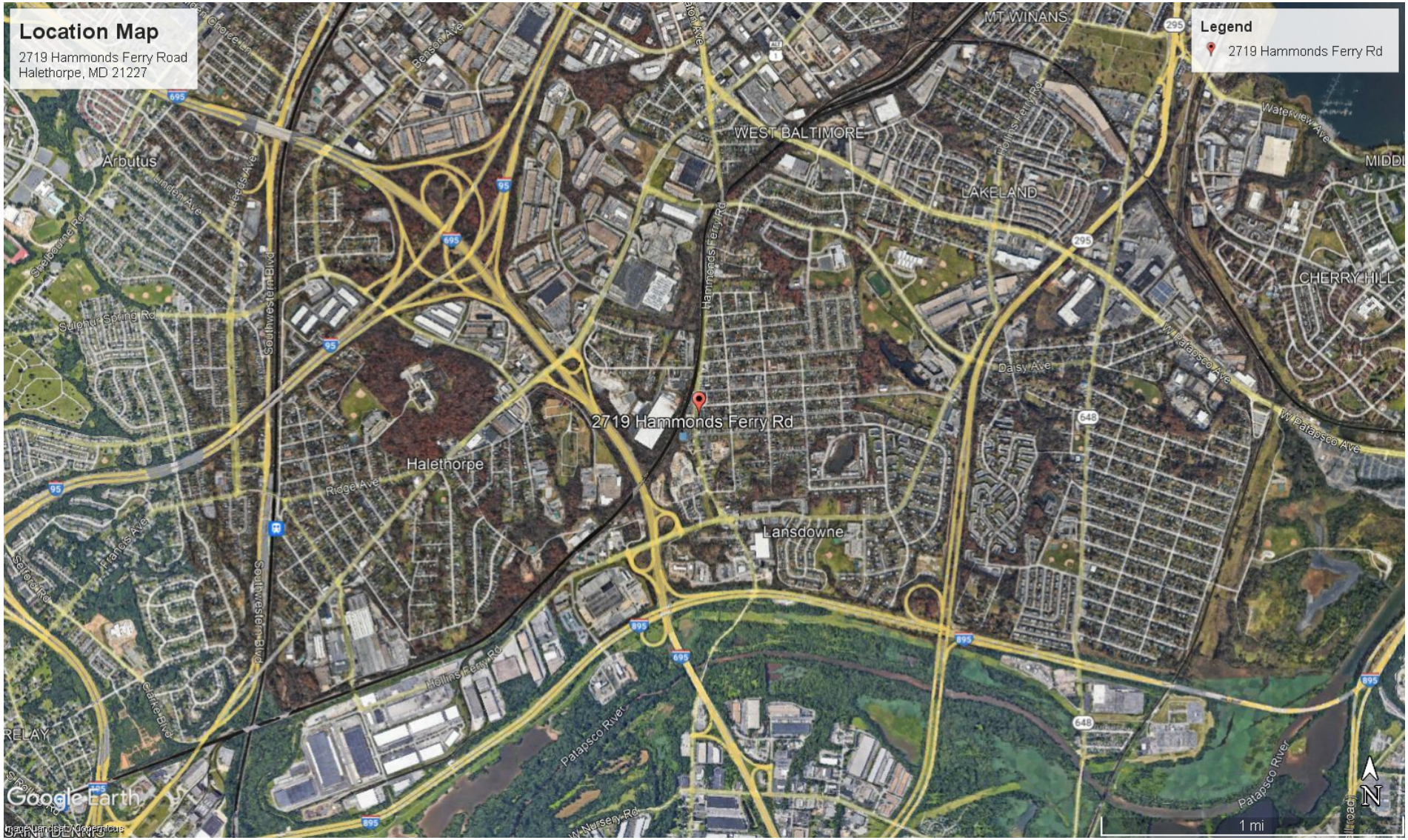

Location Map
Ambrose Funeral Home & Cremation Services of Lansdowne
2719 Hammonds Ferry Road
Lansdowne, MD 21227

GROVE SCIENTIFIC & ENGINEERING

Baltimore County GIS Map

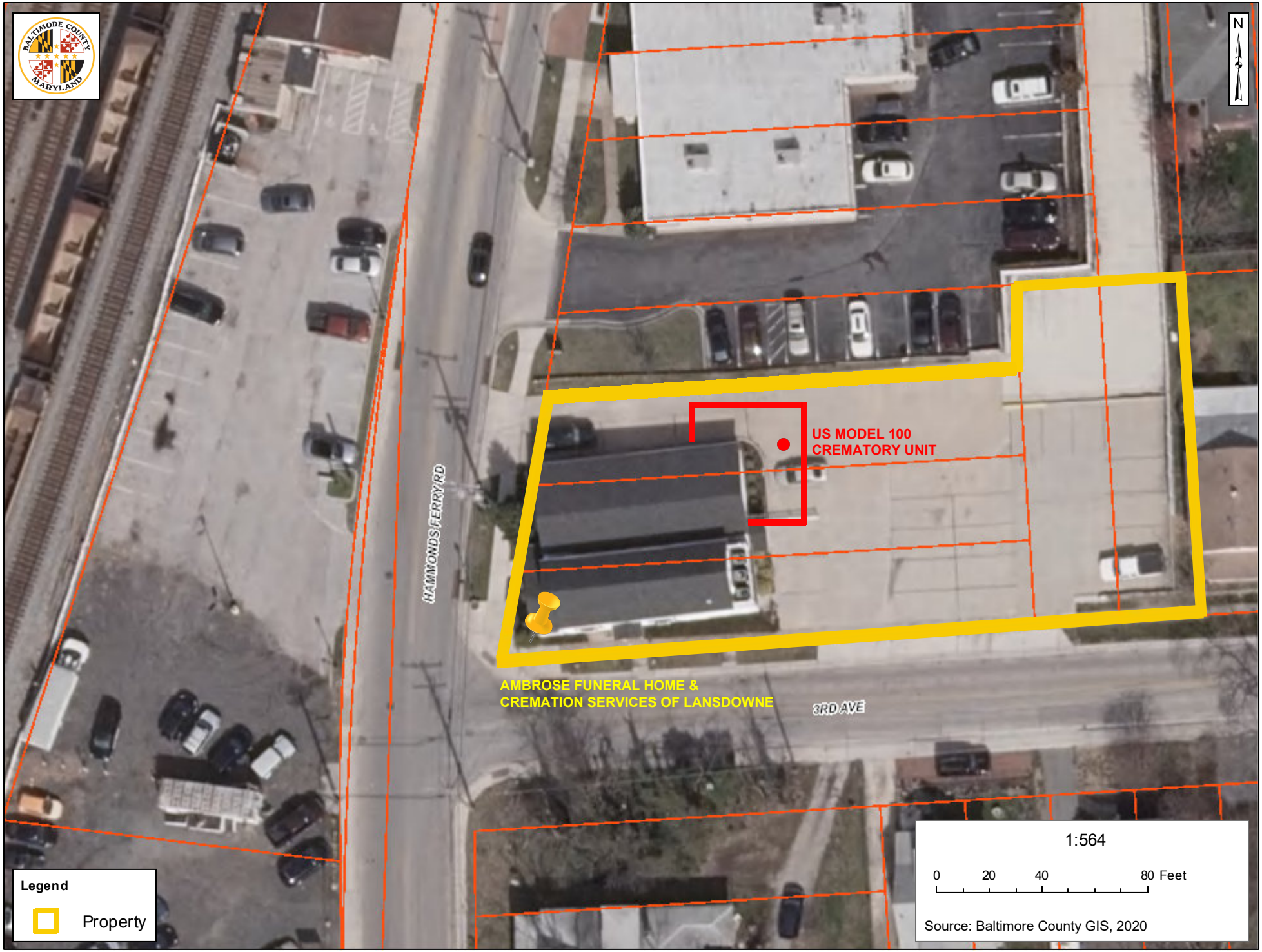

Attachment 3

Equipment Specifications and Engineering Drawings

GROVE
SCIENTIFIC & ENGINEERING

HUMAN CREMATION CHAMBER SPECIFICATION
Model US 100 *"Classic Pro"*

EQUIPMENT:

U.S. Cremation Equipment, a division of American Incinerators Corporation - Multiple Chambered Human Cremator; Natural Gas, Propane (LP) or Oil fired.

MANUFACTURER:

U.S. Cremation Equipment a division of American Incinerators Corporation.

CONSTRUCTION STANDARDS:

The cremator shall be constructed of U.L. /CSA listed components and will meet or exceed nationally accepted incinerator construction standards as originally established per the Incinerator Institute of America (IIA) publication guidelines; i.e.:

A. Primary chamber will not exceed 60% of total furnace volumes. Flue connection shall not be considered part of furnace volume.

B. Flame supervision through continuous ultraviolet scanning flame detectors on all burners.

C. High temperature refractory construction with air-cooled walls to prevent excessive heat radiation.

D. Exhaust gas temperature reduction.

SAFETY CERTIFICATIONS

Underwriters Laboratories (UL) listed appliance File number MH47704.

CREMATOR DIMENSIONS:

Chamber volumes:	Primary – 65.3 CF (1.85 CM)
	Secondary – 74.1 CF (2.1 CM)
Primary Chamber:	94" L x 40" W x 31" H (2388 mm x 1016 mm x 787.4 mm)
Structural footprint:	169" L x 65" W (4293 mm x 1651 mm)
	178" L x 75" W (w/ touch screen & electrical panel)
	(4521.2 mm x 1905 mm)

Height: Stripped:	80" H (2032 mm)
To Inducer:	87" H (2209.8 mm)
To Burner:	92" H (2336.8 mm)
To Hood:	101" H (2565.4 mm)

POWER CHARGING DOOR:

Door Height: 32.25" (819.15 mm)
Door Width: 42" (1066.8 mm)

PRIMARY CHAMBER OPENING:

Width: 40" (1016 mm)
Roof Arch Height: 31" (787.4 mm) @ High Point – 25.5" (647.7 mm) @ Low point

OPERATING TEMPERATURE:

Temperatures are determined as a result of federal, state or local permitting authority operating standards.

Typical primary chamber setting: 1,000ºF-1,200ºF (538ºC - 648ºC)
Typical secondary chamber setting: 1,600ºF-1,800ºF (871ºC - 982ºC)

RETENTION TIME:

In excess of 1 second.

CAPACITY:

Single load capacity of 800 lbs. (363 kg) per cremation cycle. Burn Rate of 200 lbs./hr. (91kg)

DRAFT:

Induced via refractory lined draft inducer.

SHIPPING WEIGHT:

27,000 lbs. (12,247kg)

EMISSIONS:

The U. S. Cremation Equipment cremator shall meet or exceed federal, state/province and local environmental regulations.

EMISSION CONTROL:

Secondary chamber equipped with one, 1,500,000 BTU/HR burner. Also equipped with an electronic exhaust gas scanner system which temporarily suspends operation of the primary chamber burner if the opacity of the exhaust gases reaches the maximum locally authorized level.

STEEL CONSTRUCTION SPECIFICATIONS:

A. The structure to be heavy 3" steel angle, square tube; 3/8" steel plate, seal welded construction.

B. Subfloor to be 3/16" steel plate, seal welded construction.

C. The exterior shell to be 14-gauge steel removable panels.

D. Interior shell to be 12-gauge steel, seal welded construction.

INSULATION & REFRACTORY SPECIFICATIONS:

A. Hot Hearth: 3000ºF (1650°C) abrasion resistant cast refractory monolithic cast 7" - 13" thick, 1 -1/2" recessed top and rounded, stressed arched bottom.

B. Chamber Floors: 3000ºF (1650°C) abrasion resistant cast refractory, 5" thick on top of 2" 2400ºF (1316°C) light weight insulating castable.

C. Chamber Ceilings: 3000ºF(1650°C) cast refractory, monolithic cast, rounded, stressed arched, 5"-9" thick, topped by 2", 2400ºF (1360°C) light weight insulating castable.

D. Interior Walls: 2800ºF (1538°C) alumina-silicate firebrick, 2 1/2" x 4 1/2" x 9", all chambers are backed by 4" of 1900ºF (1038°C) ceramic fiber insulation.

E. Stack: Lined with 2-3" of 2200ºF (1205°C) insulating refractory.

SKIN TEMPERATURE CONTROL:

Integral dual casing, completely air-cooled design to prevent excessive heat radiation.

COMBUSTION EQUIPMENT:

A. Combustion Air - One (1) Single or 3 phase, 208-230/460V, 17-15.5/7.6 amp, 7.5 hp air blower motor (1,700 CFM (158 CMM) or 5 hp Eclipse Blower.

B. Primary Chamber - One 500,000 BTU/hr nozzle mix, gas-fired burner; Eclipse, North American, or equal.

C. Secondary Chamber - One, 1,500,000 BTU/HR modulating, nozzle mix, gas-fired Burner; Eclipse, North American, or equal.

D. Burner Flame Safeguard - Control supervision on each burner via a flame safeguard relay and ultra-violet light detector.

E. Low Air Pressure Safety Switch - Interlocked to all burners.

EXHAUST GAS TEMPERATURE REDUCTION:

Exhaust duct operating exit temperature: 900ºF (482ºC)

HOT AIR DUCT:

10-gauge carbon steel, high temperature 3" refractory lining including ¼ inch insulating paper (51 -76 mm), pre-drilled Outside Diameter, 26" (711 mm) (29" at flanges, 12 bolt patter).

UTILITY REQUIREMENTS:

A. GAS:

1. Pressure:
   a) Natural Gas: 7-9" W.C. (178-228 mm)
   b) Propane: 11-14" W.C. (288-355 mm)

2. Flow Rate: 2,000,000 BTU/hr

B. ELECTRICAL:

Voltage:	220 Volts
Phase:	Single or 3 Phase
Frequency:	50/60Hz
Amperage:	70Amp for Single Phase - 40Amp for 3 Phase

CREMATION CHAMBER LOADING/CLEAN-OUT DOOR:

Hydraulically operated, refractory lined, upward movement guillotine style door with view port. It is a front loading-front cleanout design with cremated remains collection cooling hopper and removal system. The hydraulic system pump is a 1.5 HP with a capacity of 15 liters per minute or equivalent system.

CREMATION PROCESS CONTROL:

The cremation cycle is controlled by a programmable logic control (PLC) system. Visual confirmation of the system status is provided through a Color Touch Screen Panel which displays temperatures, elapsed time, burner operation and other functions. Continuous fuel and air modulation are automatically controlled by a time/temperature actuated system. Operator interface performed through the Color Touch Screen. The Temperature Chart Recorder (if applicable) is a single or dual pen.

EXTERIOR FINISH:

The top and rear compartments are finished with two coats of high-temperature, textured, black polyurethane. The front and side panels are powder coated in a dark grey color. The cremator is trimmed in stainless steel.

TOOLS:

The tools consist of a steel wire brush and rake with long handles, and a short handle rake. A trigger Hand Magnet for removal of metal is also included.

THE *classic*

ISN'T WHAT YOU EXPECT.

UL LISTED

UL and the UL logo are trademarks of UL LLC © 2013 All Rights Reserved.

US CREMATION EQUIPMENT

The standard-size cremator with more features than any unit in its price range

Since the Classic was introduced to the cremation industry, it's been turning heads. Cremation professionals have asked, "Does this machine have the technology and design to deliver notable fuel efficiency and significantly increased production – and be a cost-effective investment?" We, of course, answer with a hands-down "Yes." But we're not the ones to ask. It's our customers whose opinions matter.

"I have operated equipment for 15 years before buying your unit and I must say that nothing can cremate a sizable person better or give me a cheaper gas/electric bill"
G. David Keller • High Point Funeral Home, Memphis, TN

"They encouraged me to check the competition. I did, but no one came close in expertise, support and customer service."

Danny Losee, President • Perry Mount Park Cemetery, Pontiac, Michigan

"I shopped all the major manufacturers and was immediately impressed with U.S. Cremation Equipment's personnel and product."

David Krohn, CEO • Everglades Crematorium, Hollywood, Florida

Standard features of the Classic

- **Continuous Operation:** Heavy-duty insulation and state-of-the-art drafting allows for continuous operation, no cool-downs between cremation cycles.
- **Increased Productivity:** The Classic can complete a cremation every 75 to 90 minutes, for up to six cremations in ten hours.
- **Complete Automation:** A PLC controls the entire cremation from start to finish.
- **Fuel Efficiency:** Faster cremation cycles and "Hot Hearth" design can save up to 50% in fuel usage when performing more than one cremation in a day.
- **Environmental Safety:** Complete combustion is achieved in the Pollution Control Chamber, eliminating smoke and odor.
- **Special Case Conditions:** A large primary chamber and an operating system that controls the rate of combustion enable safe cremation of obese cases up to 800 pounds.
- **User-Friendly System with One-Touch Screens:** Operating conditions are displayed on various screens for monitoring and control during each stage of the cremation cycle.
- **Safety Compliance:** The "Classic" complies with nationally recognized safety standards and has been tested and listed by Underwriters Laboratories, Inc. (UL) – file MH 47704.

The Classic is the standard-size cremator of choice. Give us a call and we'll put you in touch with the people who use our product every day. Contact the cremation professionals, 321.282.7357.

Assistance is always a phone call away.

US Cremation Equipment

598 Northlake Blvd., Suite 1016 • Altamonte Springs, FL 32701 | 321.282.7357 | www.uscremationequipment.com

MATERIAL CALL OUT: PER INDIVIDUAL DRAWINGS | WEIGHT: Lbs | QTY: | JOB#

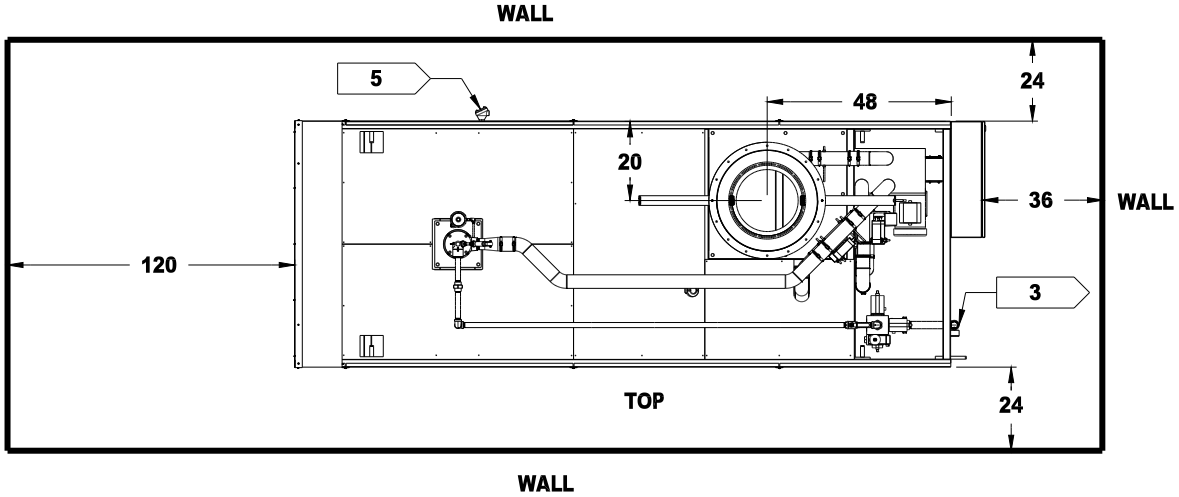

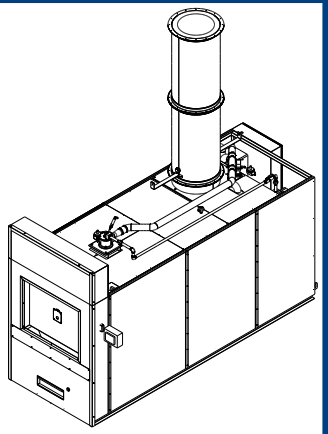

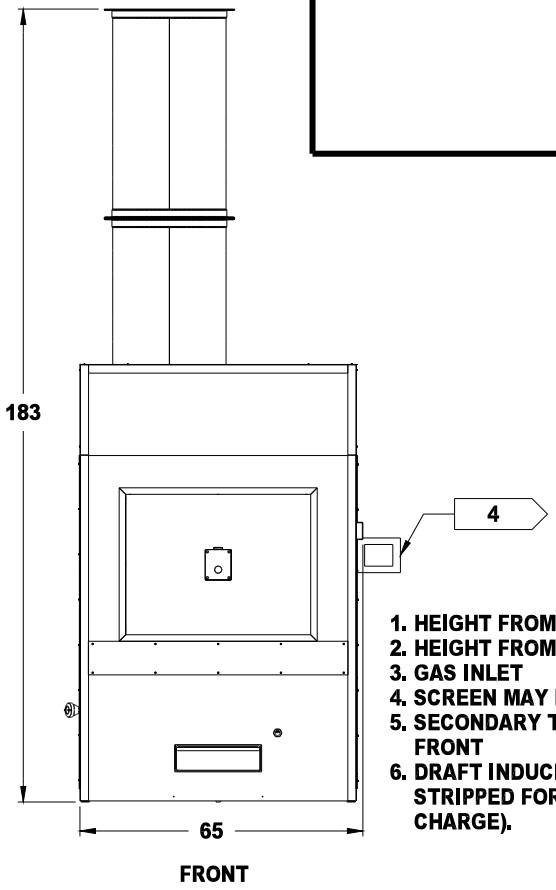

1. HEIGHT FROM FLOOR TO DRAFT INDUCER = 87"
2. HEIGHT FROM FLOOR TO TOP OF BURNER = 92"
3. GAS INLET
4. SCREEN MAY BE INSTALLED ON L OR R SIDE
5. SECONDARY THERMOCOUPLER MAY BE INSTALLED ON FRONT
6. DRAFT INDUCER & PRIMARY GAS TRAIN MAY BE STRIPPED FOR SMALLER ENTRYWAYS (ADDL. CHARGE).

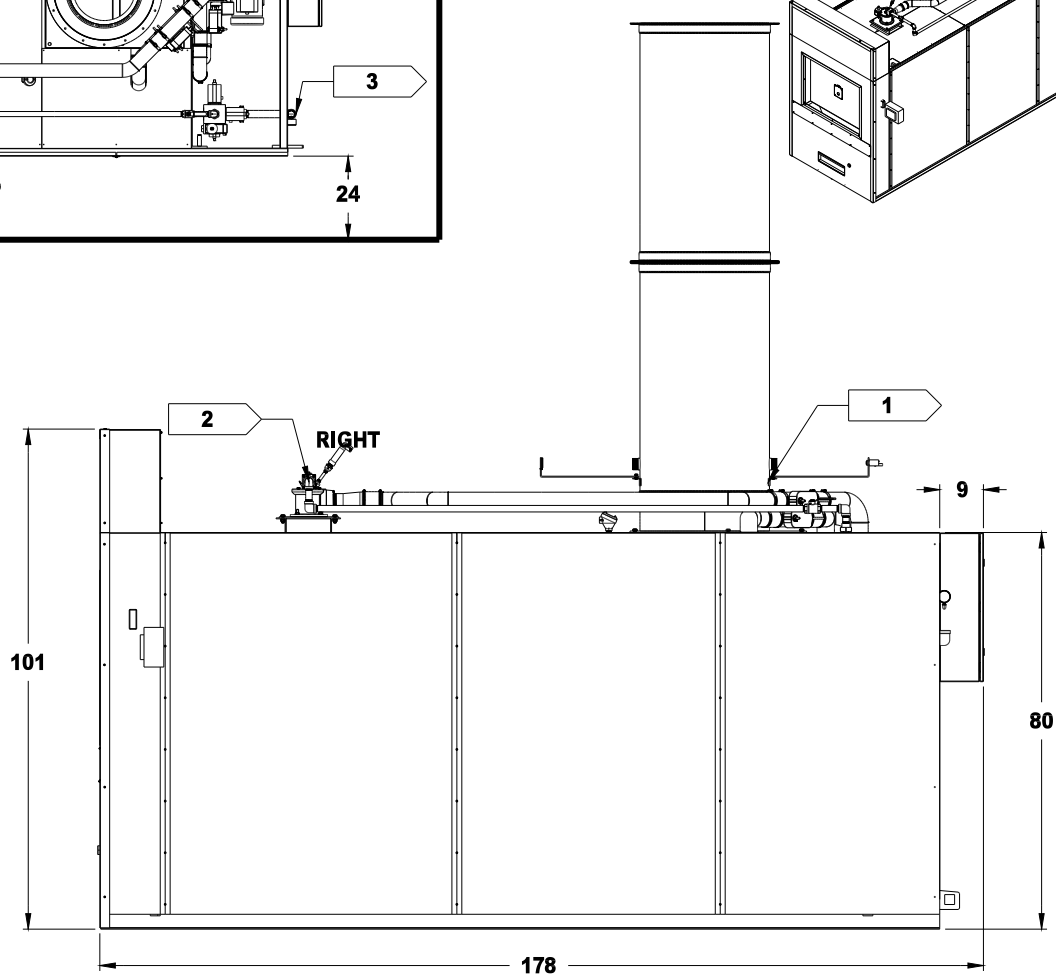

REV	ECN#	MADE BY	DESCRIPTION	DATE
	--			
0	---	SKL	INITIAL RELEASE	4.11.18

REVISION HISTORY

NOTES:

ALL DIMENSIONS ARE IN INCHES UNLESS OTHERWISE SPECIFIED
DO NOT SCALE DRAWING

TOLERANCES UNLESS OTHERWISE SPECIFIED
XXX ±.005 FRAC ±1/32
XX ±.010 CHAM 1/64 X 45°
X ±.015 ANGLE ±1/2°
RAD.1/16 R FINISH: 125 RMS
EDGE BREAK .005-.015 EXCEPT WHERE NOTED

PROPRIETY NOTICE
US CREMATION EQUIPMENT claims proprietary rights in the material disclosed hereon. This drawing is issued for engineering information only. It may not be reproduced, nor the information hereon be used for manufacturing purposes without written permission from US CREMATION EQUIPMENT

U.S. CREMATION EQUIPMENT
2814 Silver Star Rd. #201-D Orlando, Fl. 32808

DRAWN BY: S.LAFLEUR	4.11.18	DESCRIPTION: CLASSIC/CLASSIC PRO ELEVATION ASSEMBLY
CHECKED BY: LDP	8.30.18	
APPROVED BY: JJ	8.30.18	
PART NO. USCE-CPRO-ELEV-ASSY		
DWG #		SHEET: 1 OF 1

Attachment 4
Criteria Pollutants, TAPs Emission Calculations, and Ambient Impact Analysis

GROVE
SCIENTIFIC & ENGINEERING

07/20/22
12:52:44

```
 ***  SCREEN3 MODEL RUN  ***
 *** VERSION DATED 13043 ***

28-ft Stack

SIMPLE TERRAIN INPUTS:
   SOURCE TYPE            =        POINT
   EMISSION RATE (G/S)    =     0.125998
   STACK HEIGHT (M)       =       8.5344
   STK INSIDE DIAM (M)    =       0.4490
   STK EXIT VELOCITY (M/S)=       5.7902
   STK GAS EXIT TEMP (K)  =     972.8000
   AMBIENT AIR TEMP (K)   =     293.1500
   RECEPTOR HEIGHT (M)    =       0.0000
   URBAN/RURAL OPTION     =        URBAN
   BUILDING HEIGHT (M)    =       5.4864
   MIN HORIZ BLDG DIM (M) =       9.9060
   MAX HORIZ BLDG DIM (M) =      10.5674

THE REGULATORY (DEFAULT) MIXING HEIGHT OPTION WAS SELECTED.
THE REGULATORY (DEFAULT) ANEMOMETER HEIGHT OF 10.0 METERS WAS ENTERED.


BUOY. FLUX =    1.999 M**4/S**3;  MOM. FLUX =    0.509 M**4/S**2.

*** FULL METEOROLOGY ***

**********************************
*** SCREEN AUTOMATED DISTANCES ***
**********************************

*** TERRAIN HEIGHT OF    0. M ABOVE STACK BASE USED FOR FOLLOWING DISTANCES ***
```

DIST (M)	CONC (UG/M**3)	STAB	U10M (M/S)	USTK (M/S)	MIX HT (M)	PLUME HT (M)	SIGMA Y (M)	SIGMA Z (M)	DWASH
1.	0.000	0	0.0	0.0	0.0	0.00	0.00	0.00	NA
100.	20.88	4	3.5	3.5	1120.0	18.83	15.96	14.10	HS
200.	15.41	4	1.5	1.5	480.0	32.55	31.55	28.05	HS
300.	12.70	6	1.0	1.0	10000.0	39.61	32.42	23.48	HS
400.	12.76	6	1.0	1.0	10000.0	39.61	41.81	28.38	HS
500.	11.60	6	1.0	1.0	10000.0	39.61	50.99	32.99	HS
600.	10.21	6	1.0	1.0	10000.0	39.61	59.93	37.33	HS
700.	8.930	6	1.0	1.0	10000.0	39.61	68.64	41.42	HS
800.	7.834	6	1.0	1.0	10000.0	39.61	77.11	45.30	HS
900.	6.917	6	1.0	1.0	10000.0	39.61	85.35	48.98	HS
1000.	6.154	6	1.0	1.0	10000.0	39.61	93.39	52.50	HS
1100.	5.516	6	1.0	1.0	10000.0	39.61	101.22	55.87	HS

1200.	4.980	6	1.0	1.0	10000.0	39.61	108.87	59.09	HS
1300.	4.526	6	1.0	1.0	10000.0	39.61	116.33	62.20	HS
1400.	4.138	6	1.0	1.0	10000.0	39.61	123.62	65.20	HS
1500.	3.804	6	1.0	1.0	10000.0	39.61	130.75	68.09	HS
1600.	3.514	6	1.0	1.0	10000.0	39.61	137.72	70.89	HS
1700.	3.261	6	1.0	1.0	10000.0	39.61	144.55	73.60	HS
1800.	3.039	6	1.0	1.0	10000.0	39.61	151.23	76.24	HS
1900.	2.843	6	1.0	1.0	10000.0	39.61	157.79	78.80	HS
2000.	2.668	6	1.0	1.0	10000.0	39.61	164.22	81.30	HS
2100.	2.511	6	1.0	1.0	10000.0	39.61	170.53	83.73	HS
2200.	2.371	6	1.0	1.0	10000.0	39.61	176.72	86.11	HS
2300.	2.244	6	1.0	1.0	10000.0	39.61	182.80	88.43	HS
2400.	2.129	6	1.0	1.0	10000.0	39.61	188.78	90.70	HS
2500.	2.025	6	1.0	1.0	10000.0	39.61	194.66	92.91	HS
2600.	1.929	6	1.0	1.0	10000.0	39.61	200.44	95.09	HS
2700.	1.842	6	1.0	1.0	10000.0	39.61	206.12	97.22	HS
2800.	1.762	6	1.0	1.0	10000.0	39.61	211.72	99.31	HS
2900.	1.688	6	1.0	1.0	10000.0	39.61	217.23	101.36	HS
3000.	1.619	6	1.0	1.0	10000.0	39.61	222.66	103.37	HS
3500.	1.343	6	1.0	1.0	10000.0	39.61	248.67	112.95	HS
4000.	1.144	6	1.0	1.0	10000.0	39.61	273.02	121.84	HS
4500.	0.9941	6	1.0	1.0	10000.0	39.61	295.95	130.15	HS
5000.	0.8780	6	1.0	1.0	10000.0	39.61	317.67	137.98	HS
5500.	0.7855	6	1.0	1.0	10000.0	39.61	338.32	145.42	HS
6000.	0.7101	6	1.0	1.0	10000.0	39.61	358.05	152.50	HS
6500.	0.6477	6	1.0	1.0	10000.0	39.61	376.94	159.28	HS
7000.	0.5950	6	1.0	1.0	10000.0	39.61	395.10	165.79	HS
7500.	0.5502	6	1.0	1.0	10000.0	39.61	412.60	172.06	HS
8000.	0.5115	6	1.0	1.0	10000.0	39.61	429.49	178.12	HS
8500.	0.4778	6	1.0	1.0	10000.0	39.61	445.83	183.97	HS
9000.	0.4482	6	1.0	1.0	10000.0	39.61	461.68	189.66	HS
9500.	0.4220	6	1.0	1.0	10000.0	39.61	477.06	195.17	HS
10000.	0.3986	6	1.0	1.0	10000.0	39.61	492.02	200.54	HS
15000.	0.2560	6	1.0	1.0	10000.0	39.61	623.70	247.98	HS
20000.	0.1883	6	1.0	1.0	10000.0	39.61	733.39	287.75	HS
25000.	0.1488	6	1.0	1.0	10000.0	39.61	829.20	322.67	HS
30000.	0.1229	6	1.0	1.0	10000.0	39.61	915.30	354.17	HS
40000.	0.1012	4	1.0	1.0	320.0	44.56	1552.26	1553.19	HS
50000.	0.8998E-01	4	1.0	1.0	320.0	44.56	1745.77	1750.03	HS

MAXIMUM 1-HR CONCENTRATION AT OR BEYOND 1. M:

39.	31.38	3	5.0	5.0	1600.0	12.94	8.83	8.11	HS

DWASH= MEANS NO CALC MADE (CONC = 0.0)
DWASH=NO MEANS NO BUILDING DOWNWASH USED
DWASH=HS MEANS HUBER-SNYDER DOWNWASH USED
DWASH=SS MEANS SCHULMAN-SCIRE DOWNWASH USED
DWASH=NA MEANS DOWNWASH NOT APPLICABLE, X<3*LB

****

```
     *** REGULATORY (Default) ***
    PERFORMING CAVITY CALCULATIONS
  WITH ORIGINAL SCREEN CAVITY MODEL
          (BRODE, 1988)
****************************************


 *** CAVITY CALCULATION - 1 ***       *** CAVITY CALCULATION - 2 ***
  CONC (UG/M**3)     =    0.000        CONC (UG/M**3)     =    0.000
  CRIT WS @10M (M/S) =    99.99        CRIT WS @10M (M/S) =    99.99
  CRIT WS @ HS (M/S) =    99.99        CRIT WS @ HS (M/S) =    99.99
  DILUTION WS (M/S)  =    99.99        DILUTION WS (M/S)  =    99.99
  CAVITY HT (M)      =     6.33        CAVITY HT (M)      =     6.20
  CAVITY LENGTH (M)  =     9.20        CAVITY LENGTH (M)  =     8.23
  ALONGWIND DIM (M)  =     9.91        ALONGWIND DIM (M)  =    10.57

CAVITY CONC NOT CALCULATED FOR CRIT WS > 20.0 M/S.  CONC SET = 0.0

****************************************
      END OF CAVITY CALCULATIONS
****************************************


     ****************************************
     *** SUMMARY OF SCREEN MODEL RESULTS ***
     ****************************************

 CALCULATION        MAX CONC    DIST TO   TERRAIN
  PROCEDURE        (UG/M**3)    MAX (M)    HT (M)
--------------    -----------   ---------   -------
SIMPLE TERRAIN       31.38           39.        0.
```

Facility Name	Ambrose Funeral Home & Cremation Services of Lansdowne
Your Name	Meredith Roberts
Date	22-Jul-22

Model US 100 "Classic PRO"

HUMAN (number)	Animal (lbs)		Equivalent
1		Cremations per Hour	1.0
8		Cremations per 8-hour	8.0
2080		Cremations per year	2080.0

31.38 SCREEN3 maximum concentration (1 lb/hr emission rate) with stack height of 28 feet

Toxytool 2015

CAS	POLLUTANT	Emission Factor (EPA FIRE) (Pounds)	Emission Factor (as number) (Pounds)	MDE Screening Level 1-HOUR (ug/m3)	MDE Screening Level 8-HOUR (ug/m3)	MDE Screening Level Annual (ug/m3)	Screen3 Concentration 1-hour (ug/m3)	Screen3 Concentration 8-hour (ug/m3)	Screen3 Concentration Annual (ug/m3)	Screen3 Concentration as % of MDE Screening Level 1-hour	Screen3 Concentration as % of MDE Screening Level 8-hour	Screen3 Concentration as % of MDE Screening Level Annual
83329	Acenaphthene	1.11E-07	1.11E-07		2.03E+01	8.00E-02	3.48E-06	2.44E-06	6.62E-08		0.00	0.00
208968	Acenaphthylene	1.22E-07	1.22E-07		2.46E+01		3.83E-06	2.68E-06	7.27E-08		0.00	
120127	Anthracene	3.24E-07	3.24E-07		2.00E+01		1.02E-05	7.12E-06	1.93E-07		0.00	
7440360	Antimony	< 3.020E-5	3.02E-05		5.00E+00		9.48E-04	6.63E-04	1.80E-05		0.01	
7440382	Arsenic	< 3.000E-5	3.00E-05		1.00E-01	2.00E-04	9.41E-04	6.59E-04	1.79E-05		0.66	8.94
7440393	Barium	2.40E-05	2.40E-05		5.00E+00		7.53E-04	5.27E-04	1.43E-05		0.01	
56553	Benzo (a) anthracene	< 9.760E-9	9.76E-09				3.06E-07	2.14E-07	5.82E-09			
50328	Benzo (a) pyrene	< 2.910E-8	2.91E-08				9.13E-07	6.39E-07	1.73E-08			
205992	Benzo (b) fluoranthene	< 1.590E-8	1.59E-08				4.99E-07	3.49E-07	9.48E-09			
191242	Benzo (g,h,i) perylene	< 2.910E-8	2.91E-08		2.00E+01		9.13E-07	6.39E-07	1.73E-08		0.00	
207089	Benzo (k) fluoranthene	< 1.420E-8	1.42E-08				4.46E-07	3.12E-07	8.46E-09			
7440417	Beryllium	1.37E-06	1.37E-06		5.00E-04	4.00E-04	4.30E-05	3.01E-05	8.17E-07		6.02	0.20
7440439	Cadmium	1.11E-05	1.11E-05		2.00E-02	6.00E-04	3.48E-04	2.44E-04	6.62E-06		1.22	1.10
7440473	Chromium	2.99E-05	2.99E-05		5.00E+00		9.38E-04	6.57E-04	1.78E-05		0.01	
18540299	Chromium (VI)	1.35E-05	1.35E-05		1.00E-01	8.00E-05	4.24E-04	2.97E-04	8.05E-06		0.30	10.06
218019	Chrysene	< 5.400E-8	5.40E-08				1.69E-06	1.19E-06	3.22E-08			
7440484	Cobalt	< 1.750E-6	1.75E-06		2.00E-01		5.49E-05	3.84E-05	1.04E-06		0.02	
7440508	Copper	2.74E-05	2.74E-05		2.00E+00		8.60E-04	6.02E-04	1.63E-05		0.03	
53703	Dibenzo(a,h) anthracene	< 1.270E-8	1.27E-08				3.99E-07	2.79E-07	7.57E-09			
206440	Fluoranthene	2.05E-07	2.05E-07		8.20E+01		6.43E-06	4.50E-06	1.22E-07		0.00	
86737	Fluorene	4.17E-07	4.17E-07		2.00E+01		1.31E-05	9.16E-06	2.49E-07		0.00	
7647010	Hydrogen chloride	7.20E-02	7.20E-02	2.98E+01	1.65E+02	7.00E-01	2.26E+00	1.58E+00	4.29E-02	7.57	0.96	6.13
7664393	Hydrogen fluoride	6.55E-04	6.55E-04	1.64E+01	4.09E+00		2.06E-02	1.44E-02	3.90E-04	0.13	0.35	
193395	Indeno(1,2,3-cd)pyrene	< 1.540E-8	1.54E-08				4.83E-07	3.38E-07	9.18E-09			
7439921	Lead	6.62E-05	6.62E-05		5.00E-01		2.08E-03	1.45E-03	3.95E-05		0.29	
7439976	Mercury	3.29E-03	3.29E-03	3.00E-01	1.00E-01		1.03E-01	7.23E-02	1.96E-03	34.41	72.27	
7439987	Molybdenum	< 1.670E-5	1.67E-05		5.00E+00		5.24E-04	3.67E-04	9.95E-06		0.01	
7440020	Nickel	3.82E-05	3.82E-05		1.00E+00		1.20E-03	8.39E-04	2.28E-05		0.08	
85018	Phenanthrene	2.29E-06	2.29E-06		9.80E+00		7.19E-05	5.03E-05	1.37E-06		0.00	
129000	Pyrene	1.62E-07	1.62E-07		2.00E+01		5.08E-06	3.56E-06	9.66E-08		0.00	
7782492	Selenium	< 4.360E-5	4.36E-05		2.00E+00		1.37E-03	9.58E-04	2.60E-05		0.05	
7440224	Silver	7.30E-06	7.30E-06		1.00E-01		2.29E-04	1.60E-04	4.35E-06		0.16	
7440280	Thallium	< 8.520E-5	8.52E-05		2.00E-01		2.67E-03	1.87E-03	5.08E-05		0.94	
7440622	Vanadium	5.79E-05	5.79E-05		5.00E-01		1.82E-03	1.27E-03	3.45E-05		0.25	
7440666	Zinc	3.53E-04	3.53E-04	1.00E+03	5.00E+02		1.11E-02	7.75E-03	2.10E-04	0.00	0.00	
	PM, filterable	8.50E-02	8.50E-02				2.67E+00	1.87E+00	5.07E-02			
	Polycyclic aromatic hydrocarbons (PAH)	3.76E-06	3.76E-06				1.18E-04	8.26E-05	2.24E-06			
1746016	Total Dioxins & Furans - TEQ balanced		1.41E-09		8.20E-04	3.00E-08	4.42E-08	3.09E-08	8.39E-10		0.00	2.80

Ambrose Funeral Home & Cremation Services of Lansdowne
Meredith Roberts
22-Jul-22
Toxytool 2015

0.5	Primary Chamber Burner (MMBTU/hr)	1 crematory
1.5	Secondary Chamber Burner (MMBTU/hr)	1 crematory

2	Total Burner (MMBTU/hr)
2080	Cremations per year (from Toxics tab)

Pollutant	Factor AP-42 & FIRE (for cremation)	Factor AP-42 (for gas burners, per hour, per MMBTU)	Emission lb/yr	Emission lb/day	Emission lb/cremation	Emission lb/hour	Emission ton/year
PM (total)	0.09	0.01	207.80	0.57	0.10	0.02	0.1039
PM (Cond.)		0.01	23.25	0.06	0.01	0.00	0.0116
PM (Filt)	0.09	0.00	184.55	0.51	0.09	0.02	0.0923
PM10			0.00	0.00	0.00	0.00	0.0000
PM2.5			0.00	0.00	0.00	0.00	0.0000
SO2	0.16	0.00	341.49	0.94	0.16	0.04	0.1707
NOx	0.26	0.10	942.40	2.58	0.45	0.11	0.4712
CO	0.22	0.08	802.27	2.20	0.39	0.09	0.4011
VOC (TOC)	0.22	0.01	488.35	1.34	0.23	0.06	0.2442
Lead		0.00	0.00	0.00	0.00	0.00	0.0000
CO2		117.65	489411.76	1340.85	235.29	55.87	244.7059
Methane		0.00	9.38	0.03	0.00	0.00	0.0047

Attachment 5

Stack Test Report

GROVE
SCIENTIFIC & ENGINEERING

BEATTY ENVIRONMENTAL SERVICES, INC.

315 SE 20TH PL, CAPE CORAL, FL 33990
PHONE: (239) 464-1403
EMAIL: BEATTYENVIRONMENTAL12@GMAIL.COM

October 1, 2020

Compliance Section
Broward County
Pollution Prevention Division – Air Quality Division
1 North University Drive, Suite 203
Plantation, Florida 33324

Re: Guiding Light Cremations
Airs ID: 0112701

Dear Compliance Section,

On August 18, 2020, EPA Methods 1-5, 9, & 10, testing for Particulate Matter, Visible Emissions, and Carbon Monoxide was conducted at Guiding Light Cremations located at 2431 SW 56th Terrace, West Park, Florida.

The following emission Emission Unit (EU) was tested:

EU-002 Human Crematory (East Unit, Unit No.2)

If you have any questions regarding the report please contact our office as soon as possible.

Sincerely,

Zachary Beatty

Zachary Beatty
Beatty Environmental Services, Inc.

Electronic Copy to: Guiding Light Cremations

Source Test Report for Particulate and Carbon Monoxide Emissions

EPA Methods 1-5 & 10

Report

20045-ST

Conducted:

August 18, 2020

Prepared for:

Guiding Light Cremations, LLC
Unit#2
Facility ID 0112701

By

Beatty Environmental Services, Inc.
315 SE 20th Pl
Cape Coral, FL 33990
(239) 246-3646

BEATTY ENVIRONMENTAL SERVICES, INC.

Table of Contents

Section Page

1.0 Introduction 1

2.0 Certification of Test Results 2

3.0 Allowable Emission Determination 3

4.0 Cyclonic Flow Determination 3

5.0 Summary of Results 4

6.0 Particulate Emission Results 5

7.0 Carbon Monoxide Emission Results 6

8.0 Overview of Field and Analytical Procedures.....7

8.1 EPA Method 1 7
8.2 EPA Method 2 7
8.3 EPA Method 3 7
8.4 EPA Method 4 7
8.5 EPA Method 5 8
8.6 EPA Method 10 8

9.0 Sampling Point Determination Procedure 9

9.1 Sampling Point Determination 10

10.0 Summary of Field and Laboratory Data.....11

Attachment A - Field Data
Attachment B - Laboratory Data
Attachment C - Process Data
Attachment D - Calculations for Run 1
Attachment E - Calibration Data
Attachment F - Project Participants

1.0 Introduction

Guiding Light Cremations, LLC, Facility ID 0112701, located at 2431 SW 56th Ter., West Park, Florida operates two human crematories. On August 18, 2020, tests for Particulate and Carbon Monoxide emissions were conducted on Emission Unit EU-002.

The tests were performed in order to comply with the air general permit conditions and Broward County Department of Planning and Environmental Protection, Air Quality Division, Chapter 27 Article IV, Air Quality, Section 27-179(c)(2).

During the testing period, Mr. Geronimo Mena, Crematory Owner/Operator for Guiding Light Cremations, maintained a log containing the emission control device and process data. This information is presented, along with the temperature charts, in Attachment C.

The results of this test verify compliance with the requirements for 2020 (5-year) testing.

2.0 Certification of Test Results

Facility Tested:	Guiding Light Cremations, LLC 4231 SW 56th Terrace West Park, Florida 33023
Type Process:	Human Crematory, Unit #2 East Unit (EU-002)
Abatement Device:	Afterburner
Report:	20045-ST
Date:	August 18, 2020

Actual Particulate Matter (gr/dscf @ 7% o2) – 0.039
Allowable Particulate Matter (gr/dscf @ 7% o2) – 0.08

Actual Carbon Monoxide (CO) Emission Rate (PPM @ 7% o2) – 20.53
Allowable Carbon Monoxide (CO) Emission Rate (PPM @ 7% o2) – 100

I hereby certify that to my knowledge, all information and data submitted in this report is true and correct.

Nicholas Decker
Field Manager

3.0 Allowable Emission Determination

The allowable emissions were determined by permit specific conditions.

Substantiating data and calculations are presented in the Appendix D.

4.0 Cyclonic Flow Determination

EPA Method 1

"11.4.1 In most stationary sources, the direction of stack gas flow is essentially parallel to the stack walls. However, cyclonic flow may exist (1) after such devices as cyclones and inertial demisters following venturi scrubbers, or (2) in stacks having tangential inlets or other duct configurations which tend to induce swirling; in these instances, the presence or absence of cyclonic flow at the sampling location must be determined."

Due to the configuration of the system, cyclonic flow was considered to be non-existent at the sampling site.

CYCLONIC FLOW DETERMINATION

EPA Method 1, Section 11.4

FACILITY NAME: *Guiding Light Cremations, LLC*

Report Number *20045-ST*

Facility ID: *FID# 0112701 (Unit No. 2 EU-002, East)*

AVERAGE FLOW ANGLE: 0.0

CYCLONIC FLOW: (Yes/No) No

(Note: Average flow angle must be less then 20 degrees)

Date: August 18, 2020

POINT NUMBER	FLOW ANGLE (DEG)	FLOW DIRECTION (PROBE ROTATION TOWARDS) (L, R)
R 1	0.0	
2	0.0	
3	0.0	
4	0.0	
5	0.0	
6	0.0	
1	0.0	
2	0.0	
3	0.0	
4	0.0	
5	0.0	
6	0.0	
1	0.0	
2	0.0	
3	0.0	
4	0.0	
5	0.0	
6	0.0	
1	0.0	
2	0.0	
3	0.0	
4	0.0	
5	0.0	
6	0.0	
L 1	0.0	
2	0.0	
3	0.0	
4	0.0	
5	0.0	
6	0.0	

Average = 0.0

IF DEG 0 NO Flow direction is needed.

5.0 Summary of Results
Guiding Light Cremations, LLC
FID# 0112701 (Unit No. 2 EU-002, East)
20045-ST

	Run 1	Run 2	Run 3	Average
Date	8/18/2020	8/18/2020	8/18/2020	
Start Time	10:05	11:25	12:40	
Stop Time	11:07	12:27	13:42	
Process Rate (LBS/HR)	185*		165	175
Particulate Emission Rate (gr./dscf @ 7% O_2)	0.0544	0.0329	0.0310	0.039
Allowable Particulate Emission Rate (gr./dscf @7% O_2)	0.080	0.080	0.080	0.080
Visible Emission Rate (%) (highest six minute average)				0.00
Allowable Visible Emission Rate (%) (with up to 20% for 3 min. per hour)				5
Carbon Monoxide Emission Rate (ppm @7% O_2)	32.90	12.69	16.02	20.53
Allowable Carbon Monoxide Emission Rate (ppm @7% O_2)	100	100	100	100

*1 Cadaver Processed during Run 1 & 2.

6.0 Particulate Emission Results
Guiding Light Cremations, LLC
FID# 0112701 (Unit No. 2 EU-002, East)
20045-ST

	Run 1	Run 2	Run 3
Area (square feet)	2.33	2.33	2.33
Stack Pressure (inches Hg)	30.00	30.00	30.00
Meter Pressure (inches Hg)	30.07	30.07	30.07
Sample Volume (Std. Cu. Ft.)	33.298	32.261	31.905
Water Vapor (Cubic Feet)	3.95	3.11	3.34
Sample Moisture (percent)	10.61	8.79	9.48
Saturation Moisture (percent)	100.00	100.00	100.00
Molecular Weight (lbs/lb Mole wet)	28.30	28.14	28.22
Velocity (fpm)	1160	1125	1131
Volumetric Flow Rate (acfm)	2708	2626	2640
Volumetric Flow Rate (scfm-dry)	739	719	719
Concentration (gr/dscf)	0.0204	0.0141	0.0159
Concentration@7% O2 (gr/dscf)	0.0544	0.0329	0.0310
Mass Emission Rate (lbs./hr.)	0.13	0.09	0.10
Percent Isokinetic	101.64	101.13	100.07

7.0 Carbon Monoxide Emission Results
Guiding Light Cremations, LLC
FID# 0112701 (Unit No. 2 EU-002, East)
20045-ST

	Run1	Run 2	Run 3	Average
Date	8/18/2020	8/18/2020	8/18/2020	
Start Time	10:05	11:25	12:40	
Stop Time	11:07	12:27	13:42	
Percent Oxygen	15.69	14.95	13.76	
Carbon Monoxide (PPM)	12.33	5.43	8.23	
Carbon Monoxide Emissions (PPM @ 7% O_2)	32.9	12.7	16.0	20.5
Carbon Monoxide Allowable (PPM@ 7% O_2)	100	100	100	100

8.0 Overview of Field and Analytical Procedures

8.1 EPA Method 1 – Sample and Velocity Traverses for Stationary Sources

Principle – To aid in the representative measurement of pollutant emissions and/or total volumetric flow rate from a stationary source, a measurement site where the effluent stream is flowing in a known direction is selected and the cross-section of the stack is divided into a number of equal areas. A traverse point is then located within each of these equal areas. See Sampling Point Determination.

Applicability – This method is applicable to flowing gas streams in ducts, stacks and flues. This method cannot be used when: 1) flow is cyclonic or swirling 2) a stack is smaller than about 12 inches in diameter, or 0.071 cross-sectional area or 3) the measurement site is less than two stack or duct diameters downstream or less than a half diameters upstream from a flow disturbance. The procedures in this method were utilized in its entirety according to the procedures outlined in 40 CFR Part 60, Appendix A.

8.2 EPA Method 2 – Determination of Stack Gas Velocity and Volumetric Flow Rate

Principle - Type S Pitot Tube – The average gas velocity in a stack is determined from the gas density and from measurement of the average velocity head with a Type S Pitot tube.

Applicability – This method is applicable for measurement of the average velocity of a gas stream and for quantifying gas flow.

This procedure is not applicable at measurement sites, which fail to meet the criteria of Method l. This method cannot be used for direct measurement in cyclonic or swirling gas streams. The procedures in this method were utilized in its entirety according to the procedures outlined in 40 CFR Part 60, Appendix A.

8.3 EPA Method 3 – Gas Analysis for the EPA Determination of Dry Molecular Weight

Principle – A gas sample is extracted from a stack by one of the following methods 1) Single-point grab sampling 2) single-point, integrated sampling or 3) multi-point, integrated sampling, the gas sample is analyzed for percent CO_2, percent O_2, and if necessary for CO. For dry molecular weight determination, either an Orsat or a Fyrite analyzer may be used for the analysis.

Applicability – This method is applicable for determining carbon dioxide and oxygen concentrations and dry molecular weight of a sample from a gas stream of a fossil fuel combustion process. The method may also be applicable to other processes where it has been determined that compounds other than CO_2, O_2, CO, and nitrogen are not present in concentrations sufficient to affect the results. The procedures in this method were utilized in its entirety according to the procedures outlined in 40 CFR Part 60, Appendix A.

8.4 EPA Method 4 - Determination of Moisture Content in Stack Gases

Principle – A gas sample is extracted at a constant rate from the source; moisture is removed from the sample stream and determined either volumetrically or gravimetrically.

Applicability – This method is applicable for determining the moisture content of stack gas. There are two procedures given to determine the moisture. The procedure for the reference method to determine the moisture content was used to calculate the emission data. The reference method was conducted simultaneously with the pollutant emission

measurement run, calculation of percent isokinetic, pollutant emission rate, etc. for the run is based upon the results of the reference method or its equivalent. The procedures in this method were utilized in its entirety according to the procedures outlined in 40 CFR Part 60, Appendix A.

8.5 EPA Method 5 - Determination of Particulate Emissions from Stationary Sources

Principle – Particulate matter is withdrawn isokinetically from the source and collected on a glass fiber filter maintained at a temperature in the range of 120 - 248° for such other temperature as specified by an applicable subpart of the standards or approved by the Administrator, U.S. Environmental Protection Agency, for a particular application.
The particulate mass which includes any material that condenses at or above the filtration temperature, is determined gravimetrically after removal of uncombined water.
Applicability – This method is applicable for the determination of particulate emissions from stationary sources. The procedures in this method were utilized in its entirety according to the procedures outlined in 40 CFR Part 60, Appendix A.

Diagram of EPA Method 5 Sampling Train

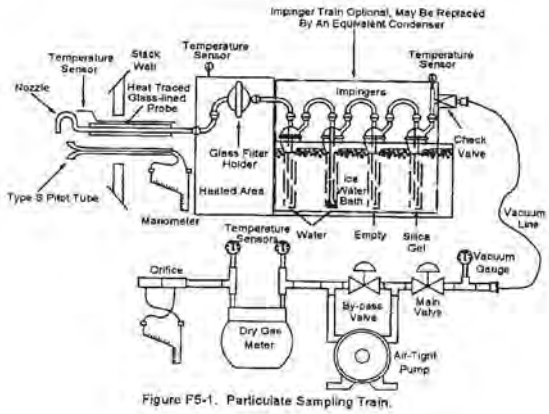

Figure F5-1. Particulate Sampling Train.

8.6 EPA Method 10 – Determination of Carbon Monoxide Emissions from Stationary Souces

Principle – An integrated or continuous gas sample is extracted from a sampling point and analyzed for carbon monoxide (CO) content using a Luft-type non-dispersive infrared analyzer or equivalent.
Applicability – This method is applicable for the determination of carbon monoxide emissions from stationary sources only when specified by the test procedures for determining compliance with new source performance standards. The procedures in this method were utilized in its entirety according to the procedures outlined in 40 CFR Part 60, Appendix A.

9.0 Sampling Point Determination Procedure

Minimum Number of Sampling Points
Per Particulate Traverse

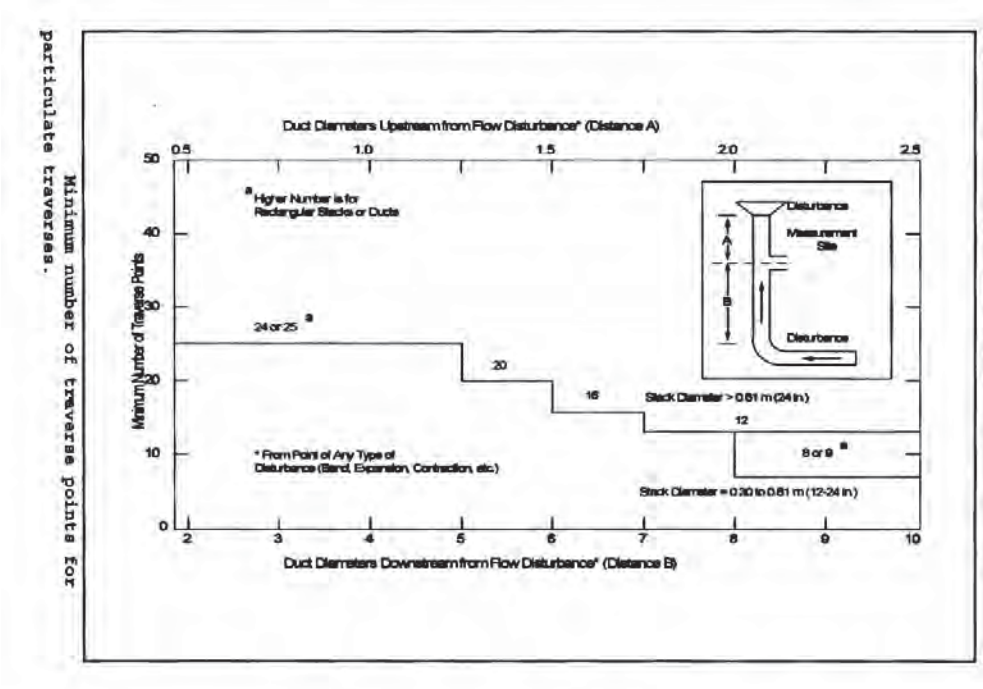

Circular Stacks

The number of sampling points is selected according to the above diagram, with the number of points equaling the next higher multiple of four.

Rectangular Stacks

The number of sampling points is determined using the matrix below.

Number of Traverse Points	Subarea Layout Matrix
9	3 x 3
12	4 x 3
16	4 x 4
20	5 x 4
25	5 x 5
30	6 x5
36	6 x 6
42	7 x 6
49	7 x 7

9.1 Sampling Point Determination
Guiding Light Cremations, LLC
FID# 0112701 (Unit No. 2 EU-002, East)
20045-ST

Stack Configuration	Rectangular
Side 1 - with ports (inches)	24
Side 2 - (inches)	14
Equivalent Diameter	17.68
Distance A - Ports located upstream from disturbance (inches)	24
Distance A - Ports located upstream from disturbance (diameters)	1.36
Distance B - Ports located downstream from disturbance (inches)	48
Distance B - Ports located downstream from disturbance (diameters)	2.71
Number of Test Ports	4
Wall or Port length	8
Number of Sampling points per Traverse	6
Number of Points Sampled	24

Photograph of Stack

Traverse Point Location

Traverse Point No.	Inches to Sample Point offset
1	9.2
2	11.5
3	13.8
4	16.2
5	18.5
6	20.8

10.0 Summary of Field and Laboratory Data
Guiding Light Cremations, LLC
FID# 0112701 (Unit No. 2 EU-002, East)
20045-ST

	Run 1	Run 2	Run 3
Date	8/18/2020	8/18/2020	8/18/2020
Start Time	10:05	11:25	12:40
Stop Time	11:07	12:27	13:42
CP	0.84	0.84	0.84
Y	1.0060	1.0060	1.0060
^Ha (inches H2O)	1.7904	1.7904	1.7904
Diameter of Nozzle (inches)	0.5623	0.5623	0.5623
Stack Diameter or Equivalent (inches)	17.68	17.68	17.68
Static Pressure (inches H2O)	-0.03	-0.03	-0.03
Barometric Pressure (inches Hg)	30.00	30.00	30.00
Test Time (minutes)	60	60	60
Meter Volume (cubic feet)	33.865	33.155	32.884
Square Root ^P (inches H2O)	0.188	0.181	0.182
Orifice Pressure ^H (inches H2O)	1.015	0.985	0.945
Average Meter Temperature (Deg. F)	82.8	88.5	90.0
Average Stack Temperature (Deg. F)	1273.5	1301.8	1298.8
Particulate Sample Weight (grms)	0.0440	0.0295	0.0329
Water Collected (grms)	83.9	65.9	70.9
Percent CO2	5.6	3.2	4.6
Percent O2	15.7	15.0	13.8
Molecular Weight (lbs/lb Mole)	29.53	29.11	29.29
Nozzle Area (square feet)	0.00172	0.00172	0.00172

Attachment A - Field Data

Beatty Environmental Services, Inc.

Particulate Field Data

Plant	Guiding Light Cremations, LLC	Y_{qa}	1.0122
Report	20045-ST-1	^Ha	1.7904
Date	08/18/20	Dn	0.5623
Operator	ND	Diameter (in.)	24.0 X 14.0
Time	Start - 10:05 End - 11:07	Traverses X Points	4 X 6
K Factor	28.0	Static Pressure	-0.03
Assumed Moisture %	10	Barometric Pressure (in. Hg)	30.00
Dry Gas Meter No.	1	Test Time (min.)	60
Nozzle ID No.	#16	Metered Volume	33.865
Wet Bulb Temperature	NA	Avg. Sq Rt ^P	0.188
Post Leak Check	.000cfm @ 12" Hg	Avg. ^H	1.015
Cp Factor	0.84	Avg. Meter Temp.	82.8
Y	1.0060	Avg. Stack Temp.	1273.5

Traverse Point Number	Sampling Time (min.)	DG METER (cu.ft.) 474.600	Velocity Head ΔP(in. H_2O)	Pressure Orifice Meter ΔH(in. H2O)	Meter Temperature (°F)	Pump Vacuum (in. Hg)	Impinger Temperature (°F)	Filter Temperature (°F)	Stack Temperature (°F)
1	2.5	476.10	0.030	0.84	80	2.0	62	256	1205
2	2.5	477.46	0.030	0.84	80	2.0	60	257	1345
3	2.5	478.89	0.040	1.12	80	3.5	61	260	1353
4	2.5	480.29	0.045	1.26	80	3.5	62	260	1261
5	2.5	481.89	0.050	1.40	80	4.5	61	261	1322
6	2.5	483.59	0.050	1.40	80	4.5	61	264	1362
1	2.5	484.75	0.020	0.56	81	2.0	62	263	1324
2	2.5	485.82	0.030	0.84	81	3.0	62	245	1330
3	2.5	487.22	0.040	1.12	81	4.0	62	238	1317
4	2.5	488.96	0.045	1.26	82	4.0	61	241	1310
5	2.5	490.59	0.050	1.40	83	5.0	61	255	1274
6	2.5	492.01	0.050	1.40	83	5.0	61	254	1282
1	2.5	493.50	0.030	0.84	83	4.5	61	252	1276
2	2.5	494.67	0.030	0.84	84	4.5	61	250	1299
3	2.5	496.27	0.040	1.12	84	5.0	62	249	1222
4	2.5	497.85	0.040	1.12	84	5.0	62	247	1299
5	2.5	499.22	0.040	1.12	84	5.0	62	248	1301
6	2.5	500.81	0.040	1.12	84	5.0	62	249	1269
1	2.5	501.99	0.020	0.56	85	3.0	63	241	1168
2	2.5	503.33	0.020	0.56	85	3.0	62	244	1236
3	2.5	504.04	0.020	0.56	85	3.0	62	246	1213
4	2.5	505.22	0.030	0.84	86	4.0	63	244	1108
5	2.5	506.74	0.040	1.12	86	5.5	64	247	1238
6	2.5	508.465	0.040	1.12	86	5.5	64	246	1250

Beatty Environmental Services, Inc.

Particulate Field Data

Plant	Guiding Light Cremations, LLC	Y_{qa}	1.0237
Report	20045-ST-2	^Ha	1.7904
Date	08/18/20	Dn	0.5623
Operator	ND	Diameter (in.)	24.0 X 14.0
Time	Start - 11:25 End - 12:27	Traverses X Points	4 X 6
K Factor	29.0	Static Pressure	-0.03
Assumed Moisture %	8	Barometric Pressure (in. Hg)	30.00
Dry Gas Meter No.	1	Test Time (min.)	60
Nozzle ID No.	#16	Metered Volume	33.155
Wet Bulb Temperature	NA	Avg. Sq Rt ^P	0.181
Post Leak Check	.000cfm @ 12" Hg	Avg. ^H	0.985
Cp Factor	0.84	Avg. Meter Temp.	88.5
Y	1.0060	Avg. Stack Temp.	1301.8

Traverse Point Number	Sampling Time (min.)	DG METER (cu.ft.) 510.900	Velocity Head ΔP(in. H_2O)	Pressure Orifice Meter ΔH(in. H2O)	Meter Temperature (°F)	Pump Vacuum (in. Hg)	Impinger Temperature (°F)	Filter Temperature (°F)	Stack Temperature (°F)
1	2.5	512.14	0.025	0.73	87	2.0	66	267	1313
2	2.5	513.38	0.025	0.73	87	2.0	65	248	1322
3	2.5	514.61	0.030	0.87	86	3.0	65	242	1351
4	2.5	516.32	0.045	1.31	87	4.0	65	248	1283
5	2.5	517.95	0.050	1.45	87	5.0	63	247	1303
6	2.5	519.57	0.050	1.45	87	5.0	63	248	1316
1	2.5	520.72	0.020	0.58	88	2.0	64	246	1310
2	2.5	521.82	0.020	0.58	88	2.0	64	247	1313
3	2.5	522.78	0.020	0.58	88	2.0	63	242	1318
4	2.5	524.36	0.035	1.02	88	4.0	63	243	1337
5	2.5	525.95	0.045	1.31	88	4.5	63	245	1327
6	2.5	527.59	0.050	1.45	88	5.0	63	244	1338
1	2.5	528.92	0.035	1.02	89	4.5	64	246	1302
2	2.5	530.37	0.040	1.16	89	5.0	63	248	1304
3	2.5	532.01	0.040	1.16	89	5.0	63	248	1302
4	2.5	533.51	0.045	1.31	89	5.5	63	248	1303
5	2.5	535.22	0.045	1.31	89	5.5	63	250	1305
6	2.5	536.87	0.045	1.31	89	5.5	62	262	1303
1	2.5	537.93	0.010	0.29	90	1.0	65	255	1255
2	2.5	538.78	0.010	0.29	90	1.0	63	242	1257
3	2.5	539.84	0.025	0.73	90	3.0	63	245	1259
4	2.5	541.11	0.035	1.02	90	4.5	62	245	1302
5	2.5	542.63	0.035	1.02	90	4.5	62	246	1258
6	2.5	544.055	0.035	1.02	90	4.5	62	247	1261

Beatty Environmental Services, Inc.

Particulate Field Data

Plant	Guiding Light Cremations, LLC	Y_{qa}	1.0126
Report	20045-ST-3	^Ha	1.7904
Date	08/18/20	Dn	0.5623
Operator	ND	Diameter (in.)	24.0 X 14.0
Time	Start - 12:40 End - 13:42	Traverses X Points	4 X 6
K Factor	28.0	Static Pressure	-0.03
Assumed Moisture %	10	Barometric Pressure (in. Hg)	30.00
Dry Gas Meter No.	1	Test Time (min.)	60
Nozzle ID No.	#16	Metered Volume	32.884
Wet Bulb Temperature	NA	Avg. Sq Rt ^P	0.182
Post Leak Check	.000cfm # 13" Hg	Avg. ^H	0.945
Cp Factor	0.84	Avg. Meter Temp.	90.0
Y	1.0060	Avg. Stack Temp.	1298.8

Traverse Point Number	Sampling Time (min.)	DG METER (cu.ft.) 548.100	Velocity Head ΔP(in. H_2O)	Pressure Orifice Meter ΔH(in. H2O)	Meter Temperature (°F)	Pump Vacuum (in. Hg)	Impinger Temperature (°F)	Filter Temperature (°F)	Stack Temperature (°F)
1	2.5	549.25	0.025	0.70	90	2.0	66	237	1289
2	2.5	550.58	0.030	0.84	89	2.0	62	254	1364
3	2.5	552.06	0.040	1.12	89	3.0	62	243	1310
4	2.5	553.49	0.040	1.12	90	3.0	62	249	1360
5	2.5	554.99	0.040	1.12	90	3.0	62	245	1346
6	2.5	556.41	0.040	1.12	90	3.0	62	248	1355
1	2.5	557.72	0.025	0.70	90	2.5	63	239	1333
2	2.5	558.98	0.030	0.84	90	3.0	62	250	1253
3	2.5	560.51	0.040	1.12	90	4.0	62	254	1286
4	2.5	562.04	0.045	1.26	90	5.0	63	247	1305
5	2.5	563.57	0.045	1.26	90	5.0	63	245	1282
6	2.5	565.25	0.045	1.26	90	5.0	63	246	1337
1	2.5	566.68	0.030	0.84	91	4.0	63	247	1310
2	2.5	567.84	0.030	0.84	90	4.0	61	243	1302
3	2.5	569.13	0.035	0.98	90	4.5	62	245	1309
4	2.5	570.52	0.035	0.98	90	4.5	62	246	1271
5	2.5	572.16	0.040	1.12	90	5.0	62	245	1286
6	2.5	573.82	0.040	1.12	90	5.0	62	244	1296
1	2.5	574.81	0.015	0.42	91	2.5	62	245	1306
2	2.5	575.78	0.020	0.56	90	2.5	62	246	1289
3	2.5	576.97	0.020	0.56	90	2.5	62	246	1240
4	2.5	578.16	0.030	0.84	90	4.5	63	251	1203
5	2.5	579.57	0.035	0.98	90	5.0	63	249	1258
6	2.5	580.984	0.035	0.98	90	5.0	64	247	1282

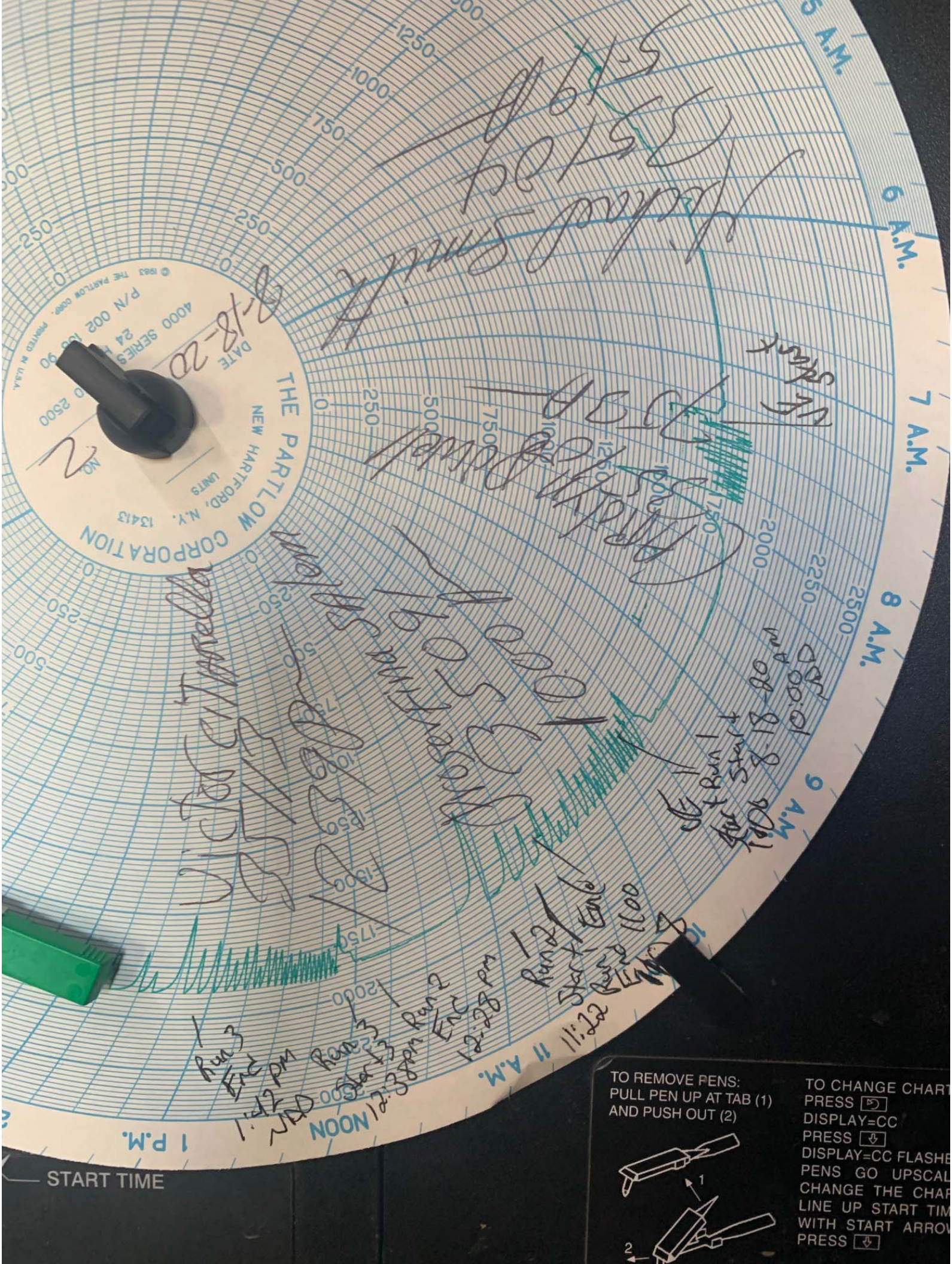
THE PARTLOW CORPORATION
NEW HARTFORD, N.Y. 13413
UNITS
NO. 2
DATE 8-18-20
4000 SERIES
P/N 002 100 90
© 1963 THE PARTLOW CORP. PRINTED IN U.S.A.
6 A.M.
7 A.M.
8 A.M.
9 A.M.
11 A.M.
NOON
1 P.M.
START TIME
Run 3 End 1:42 pm
Run 3 Start 12:38 pm
Run 2 End 12:28 pm
Run 1 End 11:22 AM
Start 11:00 AM
Run 1 Start 8-18-20 10:00 AM
TO REMOVE PENS:
PULL PEN UP AT TAB (1)
AND PUSH OUT (2)
TO CHANGE CHART
PRESS
DISPLAY=CC
PRESS
DISPLAY=CC FLASHE
PENS GO UPSCAL
CHANGE THE CHAR
LINE UP START TIM
WITH START ARROW
PRESS

Facility Name:	**Guiding Light Cremations, LLC**	**Average Analyzer Values:**				
Unit:	**Unit #2**		Raw	Bias-Corrected		
Facility ID:	**0112701**	O2:	15.69	15.69	**Corrected Results**	
Date:	**8/18/2020**	CO:	12.21	12.33	CO @ 7%	32.9
Test No.:	**20035-G**					
Run No.	**1**	CO2:	5.75	5.61		
Start:	**10:05**					
Stop:	**11:07**					

UNCORRECTED RAW DATA

Date/Time		O2 %	CO PPM	CO2 %
8/18/2020 10:05		15.92	11.53	9.05
8/18/2020 10:06		16.87	14.50	9.06
8/18/2020 10:07		16.34	11.93	9.06
8/18/2020 10:08		16.71	12.20	9.06
8/18/2020 10:09		18.17	13.53	9.07
8/18/2020 10:10		11.63	12.50	9.06
8/18/2020 10:11		13.13	12.73	9.07
8/18/2020 10:12		15.36	13.20	9.07
8/18/2020 10:13		16.02	15.33	9.08
8/18/2020 10:14		16.34	12.68	9.09
8/18/2020 10:15		16.71	13.95	9.09
8/18/2020 10:16		18.17	11.28	9.09
8/18/2020 10:17		11.63	11.38	9.10
8/18/2020 10:18		13.13	12.78	9.11
8/18/2020 10:19		15.36	11.25	9.11
8/18/2020 10:20		16.02	12.55	9.12
8/18/2020 10:21		17.67	13.35	9.11
8/18/2020 10:22		16.48	12.10	4.66
8/18/2020 10:23		15.38	12.80	4.04
8/18/2020 10:24		11.63	17.80	6.05
8/18/2020 10:25		13.13	12.03	6.09
8/18/2020 10:26		15.36	13.20	3.71
8/18/2020 10:27		13.79	17.50	5.13
8/18/2020 10:28		16.02	11.83	5.94
8/18/2020 10:29		12.27	11.23	4.89
8/18/2020 10:30		13.10	13.35	5.03
8/18/2020 10:31		11.63	11.20	5.65
8/18/2020 10:32		13.13	11.13	4.63
8/18/2020 10:33		15.36	15.18	3.80
8/18/2020 10:34	Port Change	13.95	12.53	5.17
8/18/2020 10:37		16.74	12.88	3.59
8/18/2020 10:38		15.66	13.10	4.63
8/18/2020 10:39		15.34	11.10	5.09
8/18/2020 10:40		15.23	10.65	5.18
8/18/2020 10:41		16.02	10.70	4.63
8/18/2020 10:42		17.67	12.85	2.96
8/18/2020 10:43		16.48	13.60	4.08
8/18/2020 10:44		15.83	11.33	4.81
8/18/2020 10:45		15.78	10.68	4.92
8/18/2020 10:46		15.82	10.53	4.90
8/18/2020 10:47		15.81	10.50	4.89
8/18/2020 10:48		16.95	10.93	3.94
8/18/2020 10:49		16.75	12.20	3.97
8/18/2020 10:50		16.29	11.63	4.50
8/18/2020 10:51		16.18	11.98	4.64
8/18/2020 10:52		16.08	11.95	4.69
8/18/2020 10:53		16.55	11.28	4.38
8/18/2020 10:54		16.72	11.38	4.06
8/18/2020 10:55		16.38	10.78	4.43
8/18/2020 10:56		16.30	10.55	4.51
8/18/2020 10:57		17.46	10.85	3.44
8/18/2020 10:58		17.15	12.35	3.54
8/18/2020 10:59		16.59	11.10	4.23
8/18/2020 11:00		16.47	10.60	4.41
8/18/2020 11:01		16.34	10.43	4.46
8/18/2020 11:02		16.71	10.43	4.21
8/18/2020 11:03		18.17	10.98	2.58
8/18/2020 11:04		17.43	12.20	3.19
8/18/2020 11:05		16.73	11.05	4.08
8/18/2020 11:06		16.52	12.50	4.39
8/18/2020 11:07		16.55	13.33	4.39

Facility Name:	**Guiding Light Cremations, LLC**
Unit:	**Unit #2**
Facility ID:	**0112701**
Date:	**8/18/2020**
Test No.:	**20035-G**
Run No.	**2**
Start:	**11:25**
Stop:	**12:27**

Average Analyzer Values:

	Raw	Bias-Corrected
O2:	14.95	14.95
CO:	5.38	5.43
CO2:	3.38	3.22

Corrected Results

CO @ 7% 12.7

UNCORRECTED RAW DATA

Date/Time		O2 %	CO PPM	CO2 %
8/18/2020 11:25		14.48	11.68	2.18
8/18/2020 11:26		14.12	7.13	3.91
8/18/2020 11:27		14.23	3.20	3.91
8/18/2020 11:28		14.27	3.15	3.89
8/18/2020 11:29		14.29	3.13	3.89
8/18/2020 11:30		14.41	3.10	3.81
8/18/2020 11:31		14.42	3.08	3.81
8/18/2020 11:32		14.81	3.08	3.49
8/18/2020 11:33		17.02	26.98	1.09
8/18/2020 11:34		17.45	36.40	0.98
8/18/2020 11:35		17.41	6.20	1.01
8/18/2020 11:36		15.75	4.33	3.30
8/18/2020 11:37		14.47	3.68	3.79
8/18/2020 11:38		14.61	3.53	3.70
8/18/2020 11:39		14.65	3.50	3.68
8/18/2020 11:40		14.60	3.93	3.70
8/18/2020 11:41		14.66	5.20	3.66
8/18/2020 11:42		14.70	4.63	3.64
8/18/2020 11:43		14.69	4.98	3.66
8/18/2020 11:44		14.70	4.95	3.64
8/18/2020 11:45		14.77	4.28	3.59
8/18/2020 11:46		14.80	4.38	3.57
8/18/2020 11:47		14.87	3.78	3.52
8/18/2020 11:48		14.93	4.33	3.49
8/18/2020 11:49		15.00	4.28	3.44
8/18/2020 11:50		14.91	5.53	3.51
8/18/2020 11:51		14.92	4.50	3.48
8/18/2020 11:52		14.89	5.93	3.51
8/18/2020 11:53		14.89	5.25	3.50
8/18/2020 11:54	Port Change	14.95	4.83	3.46
8/18/2020 11:57		15.15	4.98	3.34
8/18/2020 11:58		15.15	4.95	3.34
8/18/2020 11:59		15.13	4.28	3.34
8/18/2020 12:00		15.17	4.38	3.32
8/18/2020 12:01		15.03	3.78	3.41
8/18/2020 12:02		15.05	4.33	3.36
8/18/2020 12:03		15.13	3.68	3.34
8/18/2020 12:04		15.20	3.53	3.28
8/18/2020 12:05		15.13	3.50	3.33
8/18/2020 12:06		15.29	3.93	3.23
8/18/2020 12:07		15.32	5.20	3.22
8/18/2020 12:08		15.09	4.63	3.36
8/18/2020 12:09		15.14	4.98	3.32
8/18/2020 12:10		15.05	4.95	3.38
8/18/2020 12:11		15.05	4.28	3.39
8/18/2020 12:12		14.55	4.38	3.67
8/18/2020 12:13		14.70	3.78	3.56
8/18/2020 12:14		14.83	4.33	3.50
8/18/2020 12:15		14.86	3.88	3.48
8/18/2020 12:16		14.76	4.53	3.56
8/18/2020 12:17		14.52	3.88	3.67
8/18/2020 12:18		14.80	3.73	3.50
8/18/2020 12:19		15.13	3.70	3.30
8/18/2020 12:20		14.96	4.23	3.44
8/18/2020 12:21		14.73	5.40	3.56
8/18/2020 12:22		14.49	4.83	3.69
8/18/2020 12:23		14.63	5.18	3.60
8/18/2020 12:24		14.70	5.15	3.54
8/18/2020 12:25		14.83	4.48	3.49
8/18/2020 12:26		14.93	4.88	3.41
8/18/2020 12:27		14.82	3.98	3.50

Facility Name:	**Guiding Light Cremations, LLC**
Unit:	**Unit #2**
Facility ID:	**0112701**
Date:	**8/18/2020**
Test No.:	**20035-G**
Run No.	**3**
Start:	**12:40**
Stop:	**13:42**

Average Analyzer Values:

	Raw	Bias-Corrected
O2:	13.75	13.76
CO:	7.98	8.23
CO2:	4.76	4.61

Corrected Results

CO @ 7%	16.0

UNCORRECTED RAW DATA

Date/Time		O2 %	CO PPM		CO2 %
8/18/2020 12:40		13.26	5.05	10.05	9.21
8/18/2020 12:41		13.00	5.13	10.13	5.74
8/18/2020 12:42		12.33	6.20	11.20	5.83
8/18/2020 12:43		12.72	5.55	10.55	5.99
8/18/2020 12:44		11.56	5.20	10.20	6.26
8/18/2020 12:45		13.28	5.13	10.13	5.51
8/18/2020 12:46		11.72	5.08	10.08	6.14
8/18/2020 12:47		12.83	5.05	10.05	5.88
8/18/2020 12:48		12.26	5.10	10.10	5.80
8/18/2020 12:49		13.26	5.05	10.05	5.56
8/18/2020 12:50		12.38	5.05	10.05	5.64
8/18/2020 12:51		13.87	5.03	10.03	5.10
8/18/2020 12:52		12.20	5.05	10.05	5.69
8/18/2020 12:53		14.07	5.20	10.20	4.96
8/18/2020 12:54		12.13	5.15	10.15	5.73
8/18/2020 12:55		15.14	5.38	10.38	4.26
8/18/2020 12:56		11.23	5.30	10.30	6.33
8/18/2020 12:57		14.15	5.35	10.35	4.73
8/18/2020 12:58		12.84	5.15	10.15	5.24
8/18/2020 12:59		14.80	5.98	10.98	4.43
8/18/2020 13:00		11.73	5.43	10.43	5.90
8/18/2020 13:01		14.73	5.75	10.75	4.38
8/18/2020 13:02		12.20	5.50	10.50	5.61
8/18/2020 13:03		16.31	6.63	11.63	3.36
8/18/2020 13:04		12.01	7.20	12.20	5.96
8/18/2020 13:05		13.62	5.30	10.30	4.68
8/18/2020 13:06		15.53	9.10	14.10	3.91
8/18/2020 13:07		12.01	7.20	12.20	5.72
8/18/2020 13:08		13.96	5.38	10.38	4.42
8/18/2020 13:09	Port Change	16.11	15.25	20.25	3.48
8/18/2020 13:12		15.02	8.33	13.33	3.90
8/18/2020 13:13		12.47	7.70	12.70	5.38
8/18/2020 13:14		14.63	5.87	10.87	3.95
8/18/2020 13:15		16.47	22.50	27.50	3.22
8/18/2020 13:16		12.73	11.75	16.75	5.20
8/18/2020 13:17		12.78	5.15	10.15	5.12
8/18/2020 13:18		14.37	5.43	10.43	4.06
8/18/2020 13:19		16.73	17.28	22.28	2.99
8/18/2020 13:20		13.09	10.38	15.38	4.92
8/18/2020 13:21		13.02	5.15	10.15	4.93
8/18/2020 13:22		13.22	5.13	10.13	4.77
8/18/2020 13:23		16.41	11.10	16.10	3.03
8/18/2020 13:24		13.20	9.03	14.03	4.84
8/18/2020 13:25		13.03	5.03	10.03	4.89
8/18/2020 13:26		14.67	5.38	10.38	3.81
8/18/2020 13:27		16.98	14.90	19.90	2.79
8/18/2020 13:28		13.24	9.83	14.83	4.79
8/18/2020 13:29		12.32	6.75	11.75	4.65
8/18/2020 13:30		12.83	55.55	60.55	4.66
8/18/2020 13:31		16.23	7.63	12.63	2.86
8/18/2020 13:32		17.27	12.65	17.65	2.59
8/18/2020 13:33		13.52	10.25	15.25	4.58
8/18/2020 13:34		13.44	5.15	10.15	4.59
8/18/2020 13:35		13.44	5.13	10.13	4.58
8/18/2020 13:36		13.50	5.08	10.08	4.53
8/18/2020 13:37		15.27	5.35	10.35	3.39
8/18/2020 13:38		17.39	10.50	15.50	2.47
8/18/2020 13:39		13.72	9.85	14.85	4.43
8/18/2020 13:40		13.55	5.10	10.10	4.49
8/18/2020 13:41		13.60	5.05	10.05	4.44
8/18/2020 13:42		13.70	5.03	10.03	4.41

ANALYZER CALIBRATION DATA
for
Guiding Light Cremations, LLC
Unit #2

	Analyzer Span
O2	22.00
CO	89.9
NOx	1490
CO2	17.1

Facility: Guiding Light Cremations, LLC
Project No.: 20035-G
Date: 8/18/2020
Run Number 1

Unit: Unit #2
Personnel: Nicholas Decker
Analyzers: O2, CO, CO2
Run Time: 10:05 - 11:07

		Calibration Error Check			System Calibration Check					
					Pre Run		Post Run			
	Calibration Value (% or ppm)	Cylinder Number	Analyzer Calibration Response	Difference (% of Span)	System Response	System Bias (% of Span)	System Response	System Bias (% of Span)	Drift (% of Span)	Calibration Error Factors
O_2 Zero	0.00	EB0032467	-0.005	-0.02	0.025	0.14	0.058	0.29	0.15	0.04
O_2 Mid	11.98	EB0093397	12.056	0.35	11.988	-0.31	11.999	-0.26	0.05	11.99
O_2 High	22.00	EB0017888	22.004	0.02	NA	#VALUE!	NA	#VALUE!	#VALUE!	#VALUE!
CO Zero	0.00	EB0032467	-0.002	0.00	0.239	0.27	0.198	0.22	-0.05	0.22
CO Mid	45.70	CC13189	44.500	-1.33	45.200	0.78	44.100	-0.44	-1.22	44.65
CO High	89.90	CC423058	89.900	0.00	NA	#VALUE!	NA	#VALUE!	#VALUE!	#VALUE!
CO_2 Zero	0.00	EB0032467	0.000	0.00	0.200	1.17	0.180	1.05	-0.12	0.19
CO_2 Mid	8.92	EB0093397	8.980	0.35	9.030	0.29	9.030	0.29	0.00	9.0
CO_2 High	17.10	EB0017888	17.100	0.00	NA	#VALUE!	NA	#VALUE!	#VALUE!	#VALUE!

	Analyzer Span
O2	22.0
CO	89.9
NOx	1490.0
CO2	17.1

Plant: Guiding Light Cremations, LLC
Project No.: 20035-G
Date: 8/18/2020
Run Number 2

Location: Unit #2
Personnel: Nicholas Decker
Analyzers: O2, CO, CO2
Run Time: 11:25 - 12:27

		Calibration Error Check			System Calibration Check					
					Pre Run		Post Run			
	Calibration Value (% or ppm)	Cylinder Number	Analyzer Calibration Response	Difference (% of Span)	System Response	System Bias (% of Span)	System Response	System Bias (% of Span)	Drift (% of Span)	Calibration Error Factors
O_2 Zero	0.00	EB0032467	-0.005	-0.02	0.058	0.29	0.045	0.23	-0.06	0.05
O_2 Mid	11.98	EB0093397	12.056	0.35	11.999	-0.26	11.978	-0.35	-0.10	11.99
O_2 High	22.00	EB0017888	22.004	0.02	NA	#VALUE!	NA	#VALUE!	#VALUE!	#VALUE!
CO Zero	0.00	EB0032467	-0.002	0.00	0.198	0.22	0.161	0.18	-0.04	0.18
CO Mid	45.70	CC13189	44.500	-1.33	44.100	-0.44	43.800	-0.78	-0.33	43.95
CO High	89.90	CC423058	89.900	0.00	NA	#VALUE!	NA	#VALUE!	#VALUE!	#VALUE!
CO_2 Zero	0.00	EB0032467	0.000	0.00	0.180	1.05	0.190	1.11	0.06	0.19
CO_2 Mid	8.92	EB0093397	8.980	0.35	9.030	0.29	9.030	0.29	0.00	9.0
CO_2 High	17.10	EB0017888	17.100	0.00	NA	#VALUE!	NA	#VALUE!	#VALUE!	#VALUE!

O2	22.0
CO	89.9
NOx	1490.0
CO2	17.1

Plant: Guiding Light Cremations, LLC
Project No.: 20035-G
Date: 8/18/2020
Run Number 3

Location: Unit #2
Personnel: Nicholas Decker
Analyzers: O2, CO, CO2
Run Time: 12:40 - 13:42

		Calibration Error Check			System Calibration Check					
					Pre Run		Post Run			
	Calibration Value (% or ppm)	Cylinder Number	Analyzer Calibration Response	Difference (% of Span)	System Response	System Bias (% of Span)	System Response	System Bias (% of Span)	Drift (% of Span)	Calibration Error Factors
O_2 Zero	0.00	EB0032467	-0.005	-0.02	0.045	0.23	0.021	0.12	-0.11	0.03
O_2 Mid	11.98	EB0093397	12.056	0.35	11.978	-0.35	11.982	-0.34	0.02	11.98
O_2 High	22.00	EB0017888	22.004	0.02	NA	#VALUE!	NA	#VALUE!	#VALUE!	#VALUE!
CO Zero	0.00	EB0032467	-0.002	0.00	0.161	0.18	0.039	0.05	-0.14	0.10
CO Mid	45.70	CC13189	44.500	-1.33	43.800	-0.78	43.900	-0.67	0.11	43.85
CO High	89.90	CC423058	89.900	0.00	NA	#VALUE!	NA	#VALUE!	#VALUE!	#VALUE!
CO_2 Zero	0.00	EB0032467	0.000	0.00	0.190	1.11	0.220	1.29	0.18	0.21
CO_2 Mid	8.92	EB0093397	8.980	0.35	9.030	0.29	9.020	0.23	-0.06	9.0
CO_2 High	17.10	EB0017888	17.100	0.00	NA	#VALUE!	NA	#VALUE!	#VALUE!	#VALUE!

Attachment B - Laboratory Data

Particulate Laboratory Data
Guiding Light Cremations, LLC
FID# 0112701 (Unit No. 2 EU-002, East)
20045-ST

Run 1

Filter Number	3015		
	Final Weight	0.3877	grams
	Tare Weight	0.3515	grams
	Difference	0.0362	grams
Beaker Number	1C		
	Final Weight	114.0606	grams
	Tare Weight	114.0527	grams
	Difference	0.0079	grams
Filter Blank Number	3024		
	Final Weight	0.3588	grams
	Tare Weight	0.3588	grams
	Difference	0.0000	grams
Acetone Wash Down			
	Volume of Rinse	75	mL
	Residue in Rinse (calculated)	1.89897E-06	mg/mg
	Total Residue in Rinse	0.0001125	grams
Total Particulate Weight		**0.0440**	**grams**

Water Collected

	Final Impinger Water	274	mL
	Initial Impinger Water	200	mL
	Final Silica Weight	210.0	grams
	Silica Tare Weight	200.0	grams
Total Water Collected		**83.9**	**grams**

Analyst

Particulate Laboratory Data
Guiding Light Cremations, LLC
FID# 0112701 (Unit No. 2 EU-002, East)
20045-ST

Run 2

Filter Number	3016		
	Final Weight	0.3797	grams
	Tare Weight	0.3514	grams
	Difference	0.0283	grams
Beaker Number	2C		
	Final Weight	117.5061	grams
	Tare Weight	117.5048	grams
	Difference	0.0013	grams
Filter Blank Number	3024		
	Final Weight	0.3588	grams
	Tare Weight	0.3588	grams
	Difference	0.0000	grams
Acetone Wash Down			
	Volume of Rinse	75	mL
	Residue in Rinse (calculated)	1.89897E-06	mg/mg
	Total Residue in Rinse	0.0001125	grams
Total Particulate Weight		**0.0295**	**grams**

Water Collected

	Final Impinger Water	256	mL
	Initial Impinger Water	200	mL
	Final Silica Weight	210.0	grams
	Silica Tare Weight	200.0	grams
Total Water Collected		**65.9**	**grams**

Analyst

Particulate Laboratory Data
Guiding Light Cremations, LLC
FID# 0112701 (Unit No. 2 EU-002, East)
20045-ST

Run 3

Filter Number	3017		
	Final Weight	0.3801	grams
	Tare Weight	0.3483	grams
	Difference	0.0318	grams
Beaker Number	3C		
	Final Weight	114.4502	grams
	Tare Weight	114.4490	grams
	Difference	0.0012	grams
Filter Blank Number	3024		
	Final Weight	0.3588	grams
	Tare Weight	0.3588	grams
	Difference	0.0000	grams
Acetone Wash Down			
	Volume of Rinse	50	mL
	Residue in Rinse (calculated)	1.89897E-06	mg/mg
	Total Residue in Rinse	7.5E-05	grams
Total Particulate Weight		**0.0329**	**grams**

Water Collected

	Final Impinger Water	261	mL
	Initial Impinger Water	200	mL
	Final Silica Weight	210.0	grams
	Silica Tare Weight	200.0	grams
Total Water Collected		**70.9**	**grams**

Analyst

Acetone Blank Calculations

METHOD 5—DETERMINATION OF PARTICULATE MATTER EMISSIONS FROM STATIONARY SOURCES

7.2 Sample Recovery. Acetone, reagent grade, ≤0.001 percent residue, in glass bottles, is required. Acetone from metal containers generally has a high residue blank and should not be used. Sometimes, suppliers transfer acetone to glass bottles from metal containers; thus, acetone blanks shall be run prior to field use and only acetone with low blank values (≤0.001 percent) shall be used. In no case shall a blank value of greater than 0.001 percent of the weight of acetone used be subtracted from the sample weight.

Constant Variables Used

Density of Acetone:	789.9 mg/ml
Quantity of Blank:	200ml

Beaker No.	D20	
Initial Weight of Beaker	3.8579	
Final Weight of Beaker	3.8582	
Residue from Blank	**0.0003**	**g**
Conversion G>MG	0.3	mg

Beaker final weight - Beaker initial weight
.0003g
Residue from Blank multiplied by 1,000.
.3mg

Quantity of Blank	200	ml
Density of Acetone	789.9	mg/ml
Total mg of Acetone	**157980**	**mg of acetone**

Quantity of Blank x Density of Acetone

Total mg of Acetone	157980	mg
Acetone mg Residue	0.3	mg
Residue expressed as %	**0.000189897**	

Acetone mg Residue / Total mg of Acetone
.000189897 %
Residue MUST be <.001%

☑ Pass
☐ Fail

Attachment C - Process Data

Beatty Environmental Services, Inc.

Emission Control Device and Process Data Form

Facility Name: Guiding Light Cremations, LLC.

Installation: Unit #2

Type of Installation: Human Cremation Unit

Type of Fuel Used: Natural Gas

Type of Pollution Control System: Afterburner

General Condition of Control Equipment: Normal

Run No.	1	2	3
Start Time	10:05	11:25	12:40
Stop Time	11:07	12:27	13:42
Fuel GPH	Natural Gas	Natural Gas	Natural Gas
Date	8-18-2020	8-18-2020	8-18-2020
Load Rate	185lbs *		165lbs

Signature: Geronimo Mena Title: Owner/Operator

Printed Name: Geronimo Mena Report No. 20045-ST

*By signing above facility designee agrees that all information on this form is true and correct to the best of his/her knowledge.

* One Cadaver processed during Run 1 and 2.

Attachment D - Calculations for Run 1

CALCULATIONS FOR RUN 1
Guiding Light Cremations, LLC
FID# 0112701 (Unit No. 2 EU-002, East)
20045-ST

STACK AREA

(SIDE 1) X (SIDE 2) / 144

24.00 X 14.00 / 144

2.33 SQ.FT.

STACK PRESSURE

BAROMETRIC PRESSURE + (STATIC PRESSURE/ 13.6)

30.00 + (-0.03 /13.6)

30.00 IN.HG

METER PRESSURE

BAROMETRIC PRESSURE + (ORIFICE PRESURE/13.6)

30.00 + (1.02 / 13.6)

30.07 IN.Hg

SAMPLE VOLUME

17.64 X (Y) X METER VOLUME X METER PRESSURE / (METER TEMP. + 460)

17.64 X 1.0060 X 33.865 X 30.07 / (82.8 + 460)

33.298 STD.CU.FT.

WATER VAPOR VOLUME

0.04715 X WATER COLLECTED

0.04715 X 83.9

3.95 STD.CU.FT.

SAMPLE MOISTURE

100 X WATER VAPOR VOLUME / (WATER VAPOR VOLUME + SAMPLE VOLUME)

100 X 3.95 / (3.95 + 33.298)

10.61 %

SATURATION MOISTURE

100 X (VAPOR PRESSURE @ STACK TEMP. / STACK PRESSURE)

100 X (######## / 30.00)

100.00 %

STACK MOISTURE FRACTION

(THE LESSER OF SAMPLE MOISTURE OR SATURATION MOISTURE) / 100

0.106

DRY MOLECULAR WEIGHT OF STACK GAS

(0.28 X (100-%N2)) + (0.44 X %CO2) + (0.32 X %O2)

(0.28 X (100 - (5.61 + 15.69))) + (0.44 X 5.61) + (0.32 X 15.69)

29.53

CALCULATIONS FOR RUN 1
Guiding Light Cremations, LLC
FID# 0112701 (Unit No. 2 EU-002, East)
20045-ST

MOLECULAR WEIGHT OF STACK GAS

MOLECULAR WEIGHT X (1 - MOISTURE) + (18 X MOISTURE)

29.53 X (1 - 0.106) + (18 X 0.106)

28.30

STACK VELOCITY

85.49 X CP X 60 X SQ.(^P) X SQ.(STACK TEMP + 460)/SQ.(STACK PRESSURE X MOLECULAR WT.)

85.49 X 0.840 X 60 X 0.188 X SQ.(1273.5 + 460) / SQR(30.00 X 28.302)

1160 FPM

VOLUMETRIC FLOW RATE (ACFM)

STACK AREA X STACK VELOCITY

2.33 X 1160

2708 ACFM

VOLUMETRIC FLOW RATE (SCFM) DRY

17.64 X (ACFM) X STACK PRESSURE X (1-MOISTURE) / (STACK TEMP. + 460)

17.64 X 2708 X 30.00 X (1 - 0.106) / (1273.5 + 460)

739 SCFM (DRY)

CONCENTRATION (gr/dscf)

Total Particulate Weight X 15.43 / Sample Volume

0.0440 X 15.43 / 33.30

0.0204

CONCENTRATION@7% O2 (gr/dscf)

Concentration X 13.9 / (20.9 - %o2)

0.0204 X 13.9 / (20.9 - 15.690)

0.0544

MASS EMISSION RATE (LBS./HR.)

CONCENTRATION X (SCFM- DRY) X 60 / 7000

0.0204 X 739 X 60 / 7000

0.13 LBS/HR

PERCENT ISOKINETIC

.0945 X (STACK TEMP. + 460) X SAMPLE VOLUME X 60

. (STACK PRES. X VELOCITY X NOZZLE AREA X TEST TIME X (1-MOISTURE))

0.0945 X (1273.50 + 460) X 33.30 X 6O

30.00 X 1160 X 0.00172 X 60.00 X (1- 0.106)

101.64 %

Attachment E - Calibration Data

RED BALL
TECHNICAL GAS SERVICES

Assay Laboratory: Red Ball TGS
555 Craig Kennedy Way
Shreveport, LA 71107
800-551-8150

CERTIFICATE OF ANALYSIS
(Zero Ambient Nitrogen)

Cylinder Number:	EB0032467	Certification Date:	08/08/2019
Product ID Number:	121026	Expiration Date:	08/06/2027
Cylinder Pressure:	1900 PSIG	MFG Facility:	RBTGS-Shreveport-LA
COA #	EB0032467.20190808-0	Lot Number:	EB0032467.20190808
Customer PO. NO.:		Tracking Number:	056560341
Customer:		Previous Certification Dates:	

This mixture is for laboratory use only, not for drug, household or other use.
This mixture is certified in Mole % to be within ±2% of the actual number reported with a confidence of 95%.
This mixture was manufactured by scale; weights traceable to N.I.S.T. Certificate #822/266926-02.
Do Not Use This Cylinder Below 100 psig (0.7 Megapascal).

Composing Material: Zero Ambient Nitrogen, Cert., Sz152

Component	Specification	Concentration
Nitrogen	Balance	Balance
Oxygen as Impurity	<1.0 PPM	<1.0 PPM
Carbon Dioxide as Impurity	<0.5 PPM	<0.5 PPM
Carbon Monoxide as Impurity	<0.5 PPM	<0.5 PPM
Total Oxides of Nitrogen as Impurity	<0.1 PPM	<0.1 PPM
Sulfur Dioxide as Impurity	<0.1 PPM	<0.1 PPM
Total Hydrocarbons as Impurity	<0.1 PPM	<0.1 PPM

Red Ball Technical Gas Service
555 Craig Kennedy Way
Shreveport, LA 71107
800-551-8150
PGVP Vendor ID # G12020

PJLA Calibration and Testing
Accreditation #62754

EPA PROTOCOL GAS CERTIFICATE OF ANALYSIS

Cylinder Number:	EB0093397	**Certification Date:**	01/24/2020
Product ID Number:	124606	**Expiration Date:**	01/22/2028
Cylinder Pressure:	1900 PSIG	**MFG Facility:**	- Shreveport - LA
COA #	EB0093397.20200120-0	**Lot Number:**	EB0093397.20200120
Customer PO. NO.:		**Tracking Number:**	095486376
Customer:		**Previous Certification Dates:**	

This calibration standard has been certified per the May 2012 EPA Traceability Protocol, Document EPA-600/R-12/531, using procedure G1.

Do Not Use This Cylinder Below 100 psig (0.7 Megapascal).

Certified Concentration(s)

Component	Concentration	Uncertainty	Analytical Principle	Assayed On
Carbon Dioxide	**8.92 %**	±0.03 %	NDIR	01/24/2020
Oxygen	**11.98 %**	±0.06 %	MPA	01/24/2020
Nitrogen	Balance			

Analytical Measurement Data Available Online.

Reference Standard(s)

Serial Number	Lot	Expiration	Type	Balance	Component	Concentration	Uncertainty(%)	NIST Reference
EB0007908	EB0007908.20190327	06/18/2027	GMIS	N2	CO2	9.5 %	0.191	C1579010.02
EB0080793	EB0080793.20180118	07/21/2026	GMIS	N2	O2	11.97 %	0.507	071001
EB0087693	EB0087693.20180504	07/21/2026	GMIS	N2	O2	24 %	0.497	071001

Analytical Instrumentation

Component	Principle	Make	Model	Serial	MPC Date
O2	MPA	Thermo	410i	1162980025	01/06/2020
CO2	NDIR	Thermo	410i	1162980025	01/24/2020

SMART-CERT

This is to certify the gases referenced have been calibrated/tested, and verified to meet the defined specifications. This calibration/test was performed using Gases or Scales that are traceable through National Institute of Standards and Technology (NIST) to the International System of Units (SI). The basis of compliance stated is a comparison of the measurement parameters to the specified or required calibration/testing process. The expanded uncertainties use a coverage factor of k=2 to approximate the 95% confidence level of the measurement, unless otherwise noted. This calibration certificate applies only to the item described and shall not be reproduced other than in full, without written approval from Red Ball Technical Gas Services. If not included, the uncertainty of calibrations are available upon request and were taken into account when determining pass or fail.

Brandon Theus
Laboratory Supervisor
Assay Laboratory: Red Ball TGS
Version 02-J, Revised on 2018-09-17

PRAXAIR
Making our planet more productive

DocNumber: 227393

Praxair Distribution, Inc.
6055 Brent Drive
Toledo OH 43611
Tel: +1 (419) 729-7732
Fax: +1 (419) 729-2411
PGVP ID: F12018

CERTIFICATE OF ANALYSIS / EPA PROTOCOL GAS

Customer & Order Information

NEXAIR
1385 CORPORATE AVE
MEMPHIS TN 38186-1182

Certificate Modification Date: 10/23/2018
Praxair Order Number: 64635498
Part Number: EV NICDOXE113AS
Customer PO Number: 1054549

Fill Date: 10/09/2018
Lot Number: 700018282UE
Cylinder Style & Outlet: AS CGA 590
Cylinder Pressure and Volume: 2000 psig 140 ft3

Certified Concentration

ProSpec EZ Cert

Expiration Date:	**10/23/2026**	NIST Traceable
Cylinder Number:	**EB0017888**	Expanded Uncertainty
17.1 %	**Carbon dioxide**	**± 0.5 %**
22.0 %	**Oxygen**	**± 0.2 %**
Balance	**Nitrogen**	

Certification Information:

Certification Date: 10/23/2018 *Term:* 96 Months *Expiration Date:* 10/23/2026

This cylinder was certified according to the 2012 EPA Traceability Protocol, Document #EPA-600/R-12/531, using Procedure G1.

Do Not Use this Standard if Pressure is less than 100 PSIG.

O2 responses have been corrected for CO2 interference.

Analytical Data:

(R=Reference Standard, Z=Zero Gas, C=Gas Candidate)

1. ***Component:*** **Carbon dioxide**

Requested Concentration: 17.0 %
Certified Concentration: 17.1 %
Instrument Used: Horbia VA-3000
Analytical Method: NDIR
Last Multipoint Calibration: 10/22/2018

Reference Standard: Type / Cylinder #: GMIS / EB0101485
Concentration / Uncertainty: 20.17 % ±0.238%
Expiration Date: 01/13/2026
Traceable to: SRM # / Sample # / Cylinder #: PRM# 3222577.01 / n/a / FF27613
SRM Concentration / Uncertainty: 20.008% / ±0.02%
SRM Expiration Date: 04/01/2020

First Analysis Data:								**Date**	10/23/2018
Z:	0	**R:**	20.4	**C:**	17.3	**Conc:**	17.1		
R:	20.4	**Z:**	0	**C:**	17.3	**Conc:**	17.1		
Z:	0	**C:**	17.3	**R:**	20.4	**Conc:**	17.1		
UOM:	%					**Mean Test Assay:**		17.1	%

Second Analysis Data:								**Date**	
Z:	0	**R:**	0	**C:**	0	**Conc:**	0		
R:	0	**Z:**	0	**C:**	0	**Conc:**	0		
Z:	0	**C:**	0	**R:**	0	**Conc:**	0		
UOM:	%					**Mean Test Assay:**			%

2. ***Component:*** **Oxygen**

Requested Concentration: 22.0 %
Certified Concentration: 22.0 %
Instrument Used: Servomex 575
Analytical Method: Paramagnetic
Last Multipoint Calibration: 10/04/2018

Reference Standard: Type / Cylinder #: GMIS / CC348007
Concentration / Uncertainty: 22.53 % ±0.2%
Expiration Date: 11/17/2025
Traceable to: SRM # / Sample # / Cylinder #: 2659a / 71-D-04 / CAL015785
SRM Concentration / Uncertainty: 20.72% / ±0.043%
SRM Expiration Date: 08/23/2021

First Analysis Data:								**Date**	10/23/2018
Z:	0	**R:**	22.53	**C:**	22	**Conc:**	22		
R:	22.55	**Z:**	0	**C:**	22	**Conc:**	22		
Z:	0	**C:**	22	**R:**	22.55	**Conc:**	22		
UOM:	%					**Mean Test Assay:**		22	%

Second Analysis Data:								**Date**	
Z:	0	**R:**	0	**C:**	0	**Conc:**	0		
R:	0	**Z:**	0	**C:**	0	**Conc:**	0		
Z:	0	**C:**	0	**R:**	0	**Conc:**	0		
UOM:	%					**Mean Test Assay:**			%

Analyzed By **Mike Monnette**

Certified By **Edward E Zucal**

Information contained herein has been prepared at your request by qualified experts within Praxair Distribution, Inc. While we believe that the information is accurate within the limits of the analytical methods employed and is complete to the extent of the specific analyses performed, we make no warranty or representation as to the suitability of the use of the information for any purpose. The information is offered with the understanding that any use of the information is at the sole discretion and risk of the user. In no event shall the liability of Praxair Distribution, Inc., arising out of the use of the information contained herein exceed the fee established for providing such information.

PRAXAIR
Making our planet more productive

DocNumber: 256513

Praxair Distribution, Inc.
6055 Brent Drive
Toledo OH 43611
Tel: +1 (419) 729-7732
Fax: +1 (419) 729-2411
PGVP ID: F12019

CERTIFICATE OF ANALYSIS / EPA PROTOCOL GAS

Customer & Order Information

NEXAIR
1385 CORPORATE AVE
MEMPHIS TN 38186-1182

Certificate Issuance Date: 08/09/2019
Praxair Order Number: 82706796
Part Number: NI CO45MNS3E-AS
Customer PO Number: 1097683

Fill Date: 08/02/2019
Lot Number: 700019214D4
Cylinder Style & Outlet: AS CGA 660
Cylinder Pressure and Volume: 2000 psig 140 ft3

Certified Concentration

ProSpec EZ Cert

Expiration Date:	**08/12/2022**	NIST Traceable
Cylinder Number:	**CC13189**	Expanded Uncertainty
45.7 ppm	**Carbon monoxide**	**± 0.2 %**
47.2 ppm	**Nitric oxide**	**± 0.4 %**
44.9 ppm	**Sulfur dioxide**	**± 1.1 %**
Balance	**Nitrogen**	

For Reference Only: *NOx 47.4 ppm*

Certification Information: *Certification Date:* 08/12/2019 *Term:* 36 Months *Expiration Date:* 08/12/2022

This cylinder was certified according to the 2012 EPA Traceability Protocol, Document #EPA-600/R-12/531, using Procedure G1.
Do Not Use this Standard if Pressure is less than 100 PSIG.

Analytical Data:

(R=Reference Standard, Z=Zero Gas, C=Gas Candidate)

1. ***Component:*** **Carbon monoxide**

Requested Concentration: 45 ppm
Certified Concentration: 45.7 ppm
Instrument Used: Horiba VIA 510
Analytical Method: NDIR
Last Multipoint Calibration: 07/08/2019

First Analysis Data:			Date 08/05/2019
Z: 0	R: 49.8	C: 45.3	Conc: 45.6
R: 49.9	Z: 0	C: 45.5	Conc: 45.8
Z: 0	C: 45.4	R: 49.9	Conc: 45.7
UOM: ppm		Mean Test Assay:	45.7 ppm

Reference Standard: Type / Cylinder #: GMIS / DT0012181
Concentration / Uncertainty: 50.2 ppm ±0.144%
Expiration Date: 07/03/2026
Traceable to: SRM # / Sample # / Cylinder #: 1678c / 04-L-26 / FF18339
SRM Concentration / Uncertainty: 49.14 / .065
SRM Expiration Date: 02/04/2021

Second Analysis Data:			Date
Z: 0	R: 0	C: 0	Conc: 0
R: 0	Z: 0	C: 0	Conc: 0
Z: 0	C: 0	R: 0	Conc: 0
UOM: ppm		Mean Test Assay:	ppm

2. ***Component:*** **Nitric oxide**

Requested Concentration: 45 ppm
Certified Concentration: 47.2 ppm
Instrument Used: Thermo-42i LS
Analytical Method: Chemiluminescence
Last Multipoint Calibration: 07/14/2019

First Analysis Data:			Date 08/05/2019
Z: 0	R: 48.4	C: 47.2	Conc: 47.2
R: 48.5	Z: 0	C: 47.2	Conc: 47.2
Z: 0	C: 47.3	R: 48.4	Conc: 47.3
UOM: ppm		Mean Test Assay:	47.2 ppm

Reference Standard: Type / Cylinder #: GMIS / CC308865
Concentration / Uncertainty: 48.4 ppm ±0.275%
Expiration Date: 03/22/2021
Traceable to: SRM # / Sample # / Cylinder #: PRM#C1303210.02 / N/A / APEX1223947
SRM Concentration / Uncertainty: 50.07 / ±.20
SRM Expiration Date: 08/11/2018

Second Analysis Data:			Date 08/12/2019
Z: 0	R: 48.5	C: 47.3	Conc: 47.2
R: 48.5	Z: 0	C: 47.3	Conc: 47.2
Z: 0	C: 47.2	R: 48.5	Conc: 47.1
UOM: ppm		Mean Test Assay:	47.2 ppm

3. ***Component:*** **Sulfur dioxide**

Requested Concentration: 45 ppm
Certified Concentration: 44.9 ppm
Instrument Used: AMETEK 921
Analytical Method: UV Spectrometry
Last Multipoint Calibration: 07/14/2019

First Analysis Data:			Date 08/05/2019
Z: 0	R: 48.6	C: 45	Conc: 44.9
R: 48.7	Z: 0	C: 45	Conc: 44.9
Z: 0	C: 44.9	R: 48.7	Conc: 44.8
UOM: ppm		Mean Test Assay:	44.9 ppm

Reference Standard: Type / Cylinder #: NTRM / CC72609
Concentration / Uncertainty: 48.58 ppm ±1.029%
Expiration Date: 03/20/2020
Traceable to: SRM # / Sample # / Cylinder #: NTRM#120701 / N/A / NTRM#120701
SRM Concentration / Uncertainty: 48.58 / .01029
SRM Expiration Date: 03/20/2020

Second Analysis Data:			Date 08/12/2019
Z: 0	R: 48.7	C: 45.1	Conc: 45
R: 48.7	Z: 0	C: 45.1	Conc: 45
Z: 0	C: 45.1	R: 48.7	Conc: 45
UOM: ppm		Mean Test Assay:	45 ppm

Analyzed By Jesse L Glass

Certified By Edward E Zucal

Information contained herein has been prepared at your request by qualified experts within Praxair Distribution, Inc. While we believe that the information is accurate within the limits of the analytical methods employed and is complete to the extent of the specific analyses performed, we make no warranty or representation as to the suitability of the use of the information for any purpose. The information is offered with the understanding that any use of the information is at the sole discretion and risk of the user. In no event shall the liability of Praxair Distribution, Inc., arising out of the use of the information contained herein exceed the fee established for providing such information.

PRAXAIR
Making our planet more productive

DocNumber: 226622

Praxair Distribution, Inc.
6055 Brent Drive
Toledo OH 43611
Tel: +1 (419) 729-7732
Fax: +1 (419) 729-2411
PGVP ID: F12018

CERTIFICATE OF ANALYSIS / EPA PROTOCOL GAS

Customer & Order Information

NEXAIR
1385 CORPORATE AVE
MEMPHIS TN 38186-1182

Certificate Modification Date: 10/17/2018
Praxair Order Number: 64635498
Part Number: NI CO90MNS4E-AS
Customer PO Number: 1054549

Fill Date: 10/04/2018
Lot Number: 700018277GE
Cylinder Style & Outlet: AS CGA 660
Cylinder Pressure and Volume: 2000 psig 140 ft3

Certified Concentration

ProSpec EZ Cert

Expiration Date:	10/17/2026	NIST Traceable
Cylinder Number:	CC423058	Expanded Uncertainty
89.9 ppm	Carbon monoxide	± 0.3 %
93.3 ppm	Nitric oxide	± 0.8 %
90.9 ppm	Sulfur dioxide	± 0.8 %
Balance	Nitrogen	

For Reference Only: *NOx 94.1 ppm*

Certification Information: *Certification Date:* 10/17/2018 *Term:* 96 Months *Expiration Date:* 10/17/2026

This cylinder was certified according to the 2012 EPA Traceability Protocol, Document #EPA-600/R-12/531, using Procedure G1.
Do Not Use this Standard if Pressure is less than 100 PSIG.

Analytical Data:

(R=Reference Standard, Z=Zero Gas, C=Gas Candidate)

1. ***Component:*** **Carbon monoxide**

Requested Concentration: 90 ppm
Certified Concentration: 89.9 ppm
Instrument Used: Horiba VIA 510
Analytical Method: NDIR
Last Multipoint Calibration: 10/04/2018

First Analysis Data:						Date	10/10/2018
Z:	0	R:	100.5	C:	89.9	Conc:	89.9
R:	100.4	Z:	0	C:	89.8	Conc:	89.8
Z:	0	C:	89.9	R:	100.5	Conc:	89.9
UOM:	ppm				Mean Test Assay:	89.9	ppm

Reference Standard: Type / Cylinder #: GMIS / DT0010979
Concentration / Uncertainty: 100.5 ppm ±0.231%
Expiration Date: 07/05/2026
Traceable to: SRM # / Sample # / Cylinder #: 1679c / 03-K-60 / FF25429
SRM Concentration / Uncertainty: 99.28 PPM / ±0.21 PPM
SRM Expiration Date: 09/25/2022

Second Analysis Data:						Date	
Z:	0	R:	0	C:	0	Conc:	0
R:	0	Z:	0	C:	0	Conc:	0
Z:	0	C:	0	R:	0	Conc:	0
UOM:	ppm				Mean Test Assay:		ppm

2. ***Component:*** **Nitric oxide**

Requested Concentration: 90 ppm
Certified Concentration: 93.3 ppm
Instrument Used: Thermo-42i LS
Analytical Method: Chemiluminescence
Last Multipoint Calibration: 09/17/2018

First Analysis Data:						Date	10/10/2018
Z:	0	R:	100.4	C:	93	Conc:	93
R:	100.4	Z:	0	C:	93	Conc:	93
Z:	0	C:	93.1	R:	100.5	Conc:	93.1
UOM:	ppm				Mean Test Assay:	93	ppm

Reference Standard: Type / Cylinder #: NTRM / CC336511
Concentration / Uncertainty: 100.4 ppm ±0.8%
Expiration Date: 07/10/2021
Traceable to: SRM # / Sample # / Cylinder #: NTRM#17074 / n/a / NTRM#17074
SRM Concentration / Uncertainty: 100.4 PPM / ±0.80 PPM
SRM Expiration Date: 07/10/2021

Second Analysis Data:						Date	10/17/2018
Z:	0	R:	100.4	C:	93.5	Conc:	93.5
R:	100.5	Z:	0	C:	93.7	Conc:	93.7
Z:	0	C:	93.6	R:	100.4	Conc:	93.6
UOM:	ppm				Mean Test Assay:	93.6	ppm

3. ***Component:*** **Sulfur dioxide**

Requested Concentration: 90 ppm
Certified Concentration: 90.9 ppm
Instrument Used: AMETEK 921
Analytical Method: UV Spectrometry
Last Multipoint Calibration: 09/17/2018

First Analysis Data:						Date	10/10/2018
Z:	0	R:	97.2	C:	91.1	Conc:	90.9
R:	97.1	Z:	0	C:	90.9	Conc:	90.7
Z:	0	C:	91.1	R:	97.2	Conc:	90.9
UOM:	ppm				Mean Test Assay:	90.9	ppm

Reference Standard: Type / Cylinder #: GMIS / CC243745
Concentration / Uncertainty: 97.0 ppm ±0.8%
Expiration Date: 01/12/2023
Traceable to: SRM # / Sample # / Cylinder #: 1694a / 95-J-88 / CAL016706
SRM Concentration / Uncertainty: 98.07 PPM / ±0.78 PPM
SRM Expiration Date: 01/05/2019

Second Analysis Data:						Date	10/17/2018
Z:	0	R:	97	C:	91	Conc:	91
R:	97	Z:	0	C:	90.9	Conc:	90.9
Z:	0	C:	91.2	R:	97.1	Conc:	91.2
UOM:	ppm				Mean Test Assay:	91	ppm

Analyzed By **Jesse L Glass**

Certified By **Edward E Zucal**

Information contained herein has been prepared at your request by qualified experts within Praxair Distribution, Inc. While we believe that the information is accurate within the limits of the analytical methods employed and is complete to the extent of the specific analyses performed, we make no warranty or representation as to the suitability of the use of the information for any purpose. The information is offered with the understanding that any use of the information is at the sole discretion and risk of the user. In no event shall the liability of Praxair Distribution, Inc., arising out of the use of the information contained herein exceed the fee established for providing such information.

ANNUAL METER CALIBRATION **METER NO. 002047** **ORIFICE SET NO. JC40-73**

DATE	3/31/2020	Y=	1.0060	MAX % VARIATION	1.3881%	PASS
BAROMETRIC PRESSURE	29.92	^Ha=	1.7904	MAX % VARIATION	2.8421%	PASS

CRITICAL ORIFICE DATA

ORIFICE SERIAL NO.	ORIFICE K' FACTOR	ACTUAL VACUUM	^H (IN H2O)	TIME (MIN.)	AMBIENT TEMP INITIAL	AMBIENT TEMP. FINAL	METER TEMP. INITIAL	METER TEMP. FINAL	METER READING INITIAL	METER READING FINAL	VM (CU.FT.)	VM CORRECTED	Vcr STD	Vcr NOMINAL	Y	VARIATION	^H (IN. H2O)	VARIATION
40	0.2435	23.0	0.33	10	73	74	75	75	598.500	601.654	3.1540	3.1140	3.1542	3.1884	1.0129	-0.0010	1.8413	0.0000
40	0.2435	23.0	0.33	10	74	73	75	75	601.654	604.800	3.1460	3.1061	3.1542	3.1884	1.0155	0.0016	1.8413	0.0000
40	0.2435	23.0	0.33	10	73	74	75	75	604.800	607.953	3.1530	3.1130	3.1542	3.1884	1.0132	-0.0006	1.8413	0.0000
AVERAGE															1.0139	0.0139	1.8413	0.0284
48	0.3557	22.0	0.68	10	74	73	75	75	608.300	612.881	4.5810	4.5268	4.6076	4.6575	1.0179	0.0051	1.7781	0.0000
48	0.3557	22.0	0.68	10	73	74	75	75	612.881	617.462	4.5810	4.5268	4.6076	4.6575	1.0179	0.0051	1.7781	0.0000
48	0.3557	22.0	0.68	10	74	73	75	75	617.462	622.045	4.5830	4.5288	4.6076	4.6575	1.0027	-0.0101	1.7781	0.0000
AVERAGE															1.0128	0.0128	1.7781	0.0069
55	0.4616	20.5	1.15	10	73	73	75	75	622.800	628.825	6.0250	5.9606	5.9822	6.0413	1.0036	0.0006	1.7839	0.0000
55	0.4616	20.5	1.15	10	73	73	75	75	628.825	634.857	6.0320	5.9675	5.9822	6.0413	1.0025	-0.0006	1.7839	0.0000
55	0.4616	20.5	1.15	10	73	73	75	75	634.857	640.886	6.0290	5.9645	5.9822	6.0413	1.0030	-0.0001	1.7839	0.0000
AVERAGE															1.0030	0.0030	1.7839	0.0036
63	0.5916	19.0	1.90	10	73	73	75	75	642.400	650.152	7.7520	7.6832	7.6670	7.7427	0.9979	-0.0006	1.7943	0.0000
63	0.5916	19.0	1.90	10	73	74	75	76	650.152	657.902	7.7500	7.6741	7.6634	7.7463	0.9986	0.0001	1.7943	0.0000
63	0.5916	19.0	1.90	10	74	74	76	76	657.902	665.652	7.7500	7.6669	7.6598	7.7500	0.9991	0.0006	1.7943	0.0000
AVERAGE															0.9985	0.0015	1.7943	0.0022
73	0.8234	17.0	3.60	10	76	74	76	76	668.700	679.392	10.6920	10.6213	10.6511	10.7967	1.0028	0.0009	1.7583	0.0038
73	0.8234	17.0	3.60	10	74	74	76	77	679.392	690.123	10.7310	10.6502	10.6611	10.7866	1.0010	-0.0008	1.7534	-0.0011
73	0.8234	17.0	3.60	10	74	74	77	77	690.123	700.856	10.7330	10.6422	10.6611	10.7866	1.0018	-0.0001	1.7518	-0.0027
AVERAGE															1.0019	0.0019	1.7545	0.0201

SEMI ANNUAL CALIBRATION DATE **BAROMETRIC PRESSURE**

ORIFICE SERIAL NO.	ORIFICE K' FACTOR	ACTUAL VACUUM	^H (IN H2O)	TIME (MIN.)	AMBIENT TEMP INITIAL	AMBIENT TEMP. FINAL	METER TEMP. INITIAL	METER TEMP. FINAL	METER READING INITIAL	METER READING FINAL	VM (CU.FT.)	VM CORRECTED	Vcr STD	Vcr NOMINAL	Y	VARIATION	^H (IN. H2O)	VARIATION
55	0.4616	22.0	1.1	10	81	76	85	83	638.700	644.774	6.0740	0.0159	0.0000	#DIV/0!	0.0000	-1.0030	#DIV/0!	#DIV/0!
55	0.4616	22.0	1.1	10	76	73	83	82	644.774	650.809	6.0350	0.0159	0.0000	#DIV/0!	0.0000	-1.0030	#DIV/0!	#DIV/0!
55	0.4616	22.0	1.1	10	73	73	82	82	650.809	656.867	6.0580	0.0159	0.0000	#DIV/0!	0.0000	-1.0030	#DIV/0!	#DIV/0!
AVERAGE or Max															0.0000	0.00%	#DIV/0!	#DIV/0!

METER COMPARISON CHECK (Yqa) Y_{qa} = (O / Vm) X sqr(.319 x Tm X 29 / (^Ha x (Pb + (Havg / 13.6) x Md)) X sqr ^H avg

	Run 1	Run 2	Run 3	Average
Y_{qa} =	1.0122	1.0237	1.0126	1.0162

THERMOCOUPLE CALIBRATION

DATE 3/31/2020

	TC-1 (DEG F)	ASTM THERMOMETER (DEG F)
ICE	29	32
BOILING H2O	209	212
OIL	409	411

NOZZLE CALIBRATION

DATE 8/18/2020

READINGS IN (IN.)				**AVERAGE**
#8	0.562	0.562	0.563	0.5623

PITOT TUBE CP=.84 ACCORDING TO DESIGN SPECIFICATIONS

Beatty Environmental Stack Test Thermocouple Calibrations

Calibration Date : 8/18/2020
Calibration Device: ASTM Thermometer
Calibrated By:Nicholas Decker, Beatty Environmental Services, Inc.

Device	Ambient Air
ASTM Thermometer	84
Dry Gas Meter Thermocouple	84
Filter Thermocouple	84
Filter Heater Thermocouple	83
Impinger Outlet Thermocouple	83
Stack Temp Thermocouple (5ft. AC Probe)	83

Analyst:

10.5 Temperature Sensors. Use the procedure in Section 10.3 of Method 2 to calibrate in-stack temperature sensors. Dial thermometers, such as are used for the DGM and condenser outlet, shall be calibrated against mercury-in-glass thermometers. An alternative mercury-free NISTtraceable thermometer may be used if the thermometer is, at a minimum, equivalent in terms of performance or suitably effective for the specific temperature measurement application. As an alternative, the following single-point calibration procedure may be used. After each test run series, check the accuracy (and, hence, the calibration) of each thermocouple system at ambient temperature, or any other temperature, within the range specified by the manufacturer, using a reference thermometer (either ASTM reference thermometer or a thermometer that has been calibrated against an ASTM reference thermometer). The temperatures of the thermocouple and reference thermometers shall agree to within ±2 °F.

Nozzle Calibration

Nozzle ID #8

A = 0.562
B = 0.562
C = 0.563
Average 0.5623

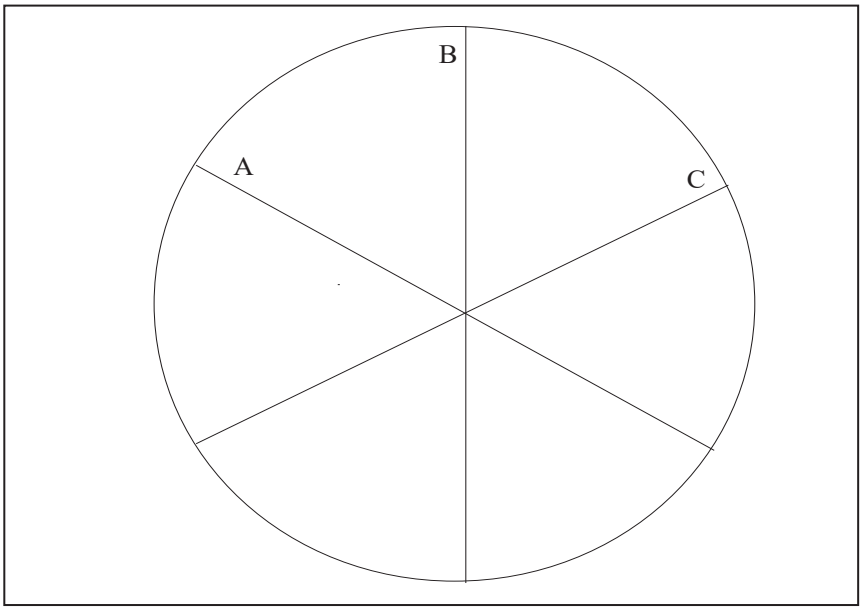

Calibration Date 8/18/2020

Calibrated by

PITOT CALIBRATION

(Type S Pitot Tube Inspection)

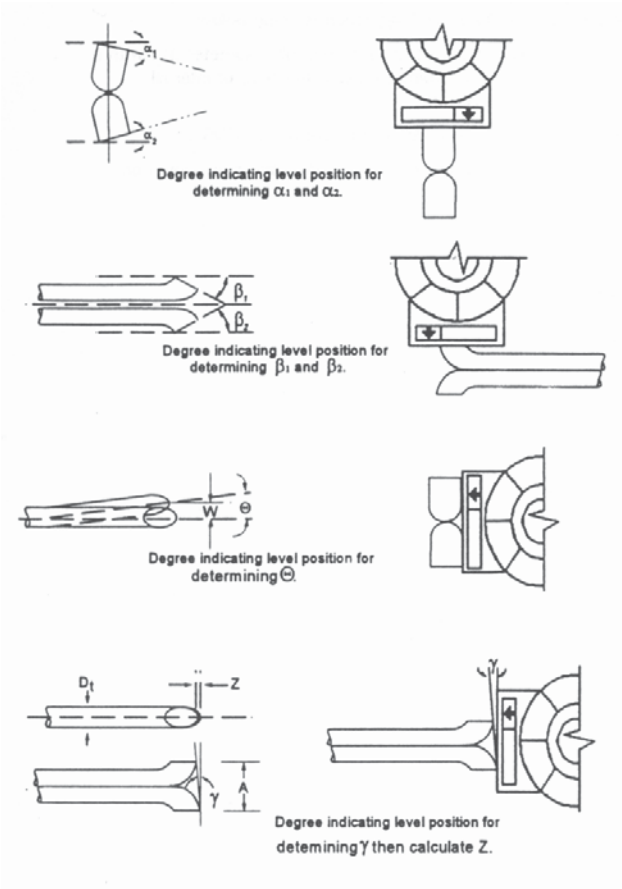

Level and Perpendicular?	Yes
Obstruction?	No
Damaged?	No
α_1 ($-10° \leq \alpha_1 \leq +10°$)	2
α_2 ($-10° \leq \alpha_2 \leq +10°$)	3
β_1 ($-5° \leq \beta_1 \leq +5°$)	1
β_2 ($-5° \leq \beta_2 \leq +5°$)	1
Y	1
θ	1
$z = A \tan\gamma$ ($\leq 0.125°$)	0.017
$w = A \tan\theta$ ($\leq 0.03125°$)	0.017
D_t ($3/16'' \leq D_t \leq +3/8''$)	0.375
A	0.984
$A/2\,D_t$ ($1.05 \leq P_A / D_t \leq 1.51$)	1.312

Certification

I hereby certify that type S pitot tube ID# P-5AC meets or exceeds all specifications, criteria and applicable design features, and is hereby assigned a pitot tube calibration factor of 0.84.

Certified by: Date 01/14/2019

Attachment F - Project Participants

Project Participants

Beatty Environmental Services, Inc.

Daniel R. Beatty
Project Director

Nick Decker
Field Manager

Colton Catto
Field Technician I

Zachary Beatty
Director of Operations

Guiding Light Cremations, LLC - FID# 0112701 (Unit No. 2 EU-002, East)

Geronimo Mena
Owner/Operator

Attachment 6

Process Flow Diagram

GROVE
SCIENTIFIC & ENGINEERING

Ambrose Funeral Home & Cremation Services of Lansdowne

US Cremation Equipment Model 100 "Classic Pro"

Process Flow Diagram

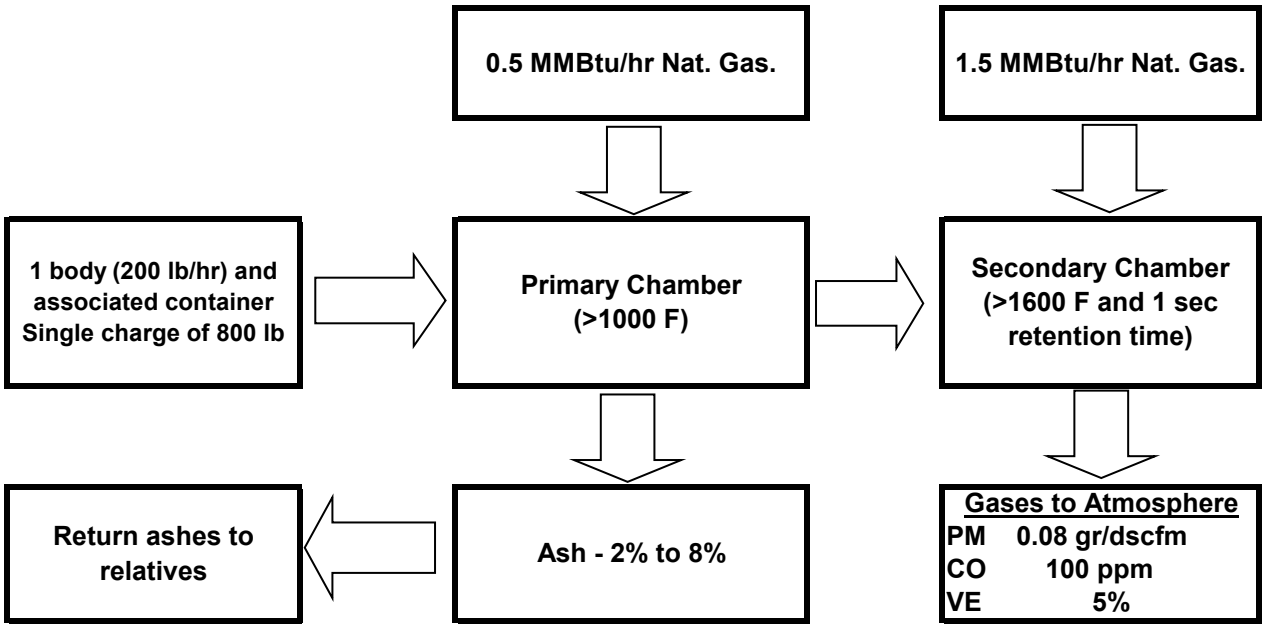

ATTACHMENT 7

ZONING APPROVAL LETTER

GROVE
SCIENTIFIC & ENGINEERING

JOHN A. OLSZEWSKI, JR.
County Executive

PAUL M. MAYHEW
Managing Administrative Law Judge
MAUREEN E. MURPHY
Administrative Law Judge

April 22, 2021

Jason Vettori, Esquire - jvettori@sgs-law.com

RE: Petition for Special Hearing & Exception
Case No. 2021-0043 SPHX
Property: 2719 Hammonds Ferry Road

Dear Mr. Vettori:

Enclosed please find a copy of the decision rendered in the above-captioned matter.

Pursuant to Baltimore County Code § 32-3-401(a), "a person aggrieved or feeling aggrieved" by this Decision and Order may file an appeal to the County Board of Appeals within thirty (30) days of the date of this Order. For further information on filing an appeal, please contact the Office of Administrative Hearings at 410-887-3868.

Sincerely,

PAUL M. MAYHEW
Managing Administrative Law Judge
for Baltimore County

PMM:dlm
Enclosure
c: Elizabeth Yankulov –hrpuffinstuff1203@yahoo.com
Brian Gamage – bgamage@uscremationequipment.com
Ernest Bailey, President, Lansdowne Improvement Association –ernieebailey@gmail.com
Alice Larrimore – alice@machadoconstruction.net

IN RE: PETITIONS FOR SPECIAL HEARING AND SPECIAL EXCEPTION	*	BEFORE THE
(2719 Hammonds Ferry Road) 13th Election District	*	OFFICE OF ADMINISTRATIVE
1st Council District	*	HEARINGS FOR
Ambrose Properties, LLC & Ambrose Funeral Home, Inc.	*	BALTIMORE COUNTY
Legal Owners/Petitioners	*	**Case No. 2021-0043-SPHX**

* * * * * * * * *

OPINION AND ORDER

This matter comes before the Office of Administrative Hearings ("OAH") for consideration of Petitions for Special Hearing and Special Exception filed by Ambrose Properties, LLC and Ambrose Funeral Home, legal owners ("Petitioners"). The Special Exception request is for a funeral establishment pursuant to the Baltimore County Zoning Regulations ("BCZR") § 230.3 and for such other and further relief as may be required by the Administrative Law Judge ("ALJ") for Baltimore County. The Special Hearing request is for a modification of existing conditions to allow for an expansion and modification of the approved funeral establishment, including accessory crematorium services; and for a modified parking plan pursuant to Baltimore County Zoning Regulations ("BCZR") § 409.12.B, and for such other and further relief as may be required by the ALJ for Baltimore County.

Due to the COVID-19 pandemic, a public WebEx hearing was conducted virtually in lieu of an in-person hearing. The Petition was properly advertised and posted. Substantive Zoning Advisory Committee ("ZAC") comments were received from the Department of Planning ("DOP") and the Baltimore County Fire Marshal's Office. They did not oppose the requested relief, subject to certain conditions which will be incorporated into this Order.

RECORD EVIDENCE

Joseph Ambrose, one of the propreitors of the Ambrose Funeral Home business, appeared in support of the Petition. John Mellema, the land surveyor who prepared the site plan, appeared at the hearing. The site plan was marked and accepted into evidence as Petitioner's Exhibit 1. Brian Gamage, a representative from the crematorium equipment manufacturer also appeared. Jason Vettori, Esquire represented the Petitioners. Alice Larrimore, an adjoining property owner appeared and voiced opposition to the requested relief. Ernest Bailey, the President of the Lansdowne Improvement Association, also testified and proposed limiting conditions on the requested relief. Correspondence from the community in support of the requested relief was admitted as Petitioner's Exhibit 10.

In Case No. 91-211-XA the existing funeral establishment was approved by special exception, however the Order had a condition that prohibited embalming or crematory services on the premises. Mr. Ambrose testified that in 1991 cremations made up only 7% of funeral arrangements, but that the percentage has grown each successive decade so that in 2020 approximately 45% of families choose cremation. Mr. Ambrose explained that this change in the funeral business is what drives their request to add a crematory to their existing funeral home at this location. Mr. Vettori explained that crematoriums are permitted as accessory uses to funeral establishment under § 230.13 of the Zoning Commissioner's Policy Manual ("ZCMP"). It was also explained that the site plan provides for 29 parking spaces, which is three more spaces than were approved in the 1991 Order. It was further explained that there will be no visitors to the crematory so there will be no increased demand for parking. Mr. Gamage explained the technical aspects of the crematory equipment. Specifically, he explained that the proposed equipment will exceed the emissions standards prescribed by Maryland state law. He explained that only

microscopic particles are released and that no odors are generated. The only visible sign of the crematory activity are a vapor-like mist akin to that rising from an asphalt road on a hot summer day.

Mrs. Larrimore testified that her property abuts the parking lot of this funeral establishment. She testified that she and her husband have always had a good relationship with the Ambrose family, but she really does not want a crematorium right next door to her. In essence, she articulated the understandable psychological resistance to living next to such a facility. She explained that she spends a lot of time in her yard and does not want to think about the air she is breathing while she is outside in her yard. Mr. Bailey from the community association said that the community was split 50/50 on whether they supported or opposed the crematorium. He did request that the hours of operation be strictly limited to night-time hours. In response, Mr. Ambrose testified that he is more than willing to limit hours of operation.

SPECIAL HEARING / SPECIAL EXCEPTION

Under Maryland law, a special exception use enjoys a presumption that it is in the interest of the general welfare, and therefore, valid. *Schultz v. Pritts*, 291 Md. 1 (1981). The *Schultz* standard was revisited in *Attar v. DMS Tollgate, LLC*, 451 Md. 272, (2017), where the court of appeals discussed the nature of the evidentiary presumption in special exception cases. The court again emphasized a special exception is properly denied only when there are facts and circumstances showing that the adverse impacts of the use at the particular location in question would be above and beyond those inherently associated with the special exception use. As noted above, a funeral establishment has already been approved at this location by special exception in Case No. 91-211-XA. However, as also noted, a condition of that Order was that no embalming or crematory services be performed. Based on the testimony and evidence presented I find that the proposed crematorium

addition should be permitted as an accessory use to the existing funeral establishment, as permitted by § 230.13 of the ZCPM, subject to certain conditions that are set out below. Counsel for Petitioner correctly argued that under *Anderson v. Sawyer*, 23 Md. App. 612 (1974), the generalized psychological resistance to funeral establishments are not sufficient to justify denial of zoning relief.

THEREFORE, IT IS ORDERED this **22nd day** of **April, 2021**, by this Administrative Law Judge that the Petition for Special Hearing to allow modification of existing conditions for an expansion of the approved funeral establishment, including accessory crematorium services under BCZR § 230.3 and ZCPM § 230.13, and for a modified parking plan pursuant to BCZR § 409.12.B; and for such other and further relief as may be required by the ALJ for Baltimore County is hereby **GRANTED**.

IT IS FURTHER ORDERED that the Petition for Special Exception to allow a funeral establishment, including accessory crematorium services pursuant to the Baltimore County Zoning Regulations ("BCZR") § 230.3 and ZCPM § 230.13; and for such other and further relief as may be required by the Administrative Law Judge ("ALJ") for Baltimore County is hereby **GRANTED**.

The relief granted herein shall be subject to the following:

- Petitioners may apply for necessary permits and/or licenses upon receipt of this Order. However, Petitioners are hereby made aware that proceeding at this time is at its own risk until 30 days from the date hereof, during which time an appeal can be filed by any party. If for whatever reason this Order is reversed, Petitioners would be required to return the subject property to its original condition.

- Petitioners' building shall be designed and constructed to meet the provisions of the Baltimore County Fire Prevention Code, County Bill No. 3-17.

- Conditions 4 and 6 of the Order in Case No. 91-211-XA shall be stricken.

- Petitioners shall only engage in crematory operations from 10 p.m. until 6 a.m. Monday thru Friday.

Any appeal of this decision must be made within thirty (30) days of the date of this Order.

PAUL M. MAYHEW
Managing Administrative Law Judge
for Baltimore County

PMM:dlm

ATTACHMENT 8

Worker's Compensation

Coverage

GROVE
SCIENTIFIC & ENGINEERING

EMPLOYERS®

EMPLOYERS PREFERRED INS. CO.
A Stock Company

Workers' Compensation and Employers Liability Insurance Policy

Policy Number	Policy Period From	To
EIG 4860777 00	11/01/2021	11/01/2022
	12:01A.M. Standard Time at the address of the Insured as stated herein	

Transaction

POLICY DECLARATIONS

NCCI Carrier # 31283 **WCIRB CARRIER#** **PRIOR POLICY NUMBER** NEW

1. Named Insured and Address	**Agent**
AMBROSE FUNERAL HOME & CREMATI 1328 SULPHUR SPRING ROAD HALETHORPE MD 21227	BAY AREA INSURANCE GROUP LLC 6711200 818 E COLLEGE PKWY ANNAPOLIS, MD 21409 Telephone: 4106477333

Customer #	Carrier #	FEIN #	Risk ID #	Entity of Insured
	31283	520631187		CORPORATION

Additional Locations:

2. The Policy Period is from 11/01/2021 to 11/01/2022 12:01 a.m. Standard Time at the Insured's mailing address.

3. A. Workers Compensation Insurance: Part ONE of the policy applies to the Workers Compensation Law of the states listed here: MD

B. Employers Liability Insurance: Part TWO of the policy applies to work in each state listed in Item 3A. The limits of our liability under Part TWO are:

Bodily Injury by Accident	$	100,000	each accident
Bodily Injury by Disease	$	500,000	policy limit
Bodily Injury by Disease	$	100,000	each employee

C. Other States Insurance: Part THREE of the policy applies to the states, if any, listed here: All states except ND, OH, WA, WY and states listed in item 3.A.

D. This policy includes these endorsements and schedules: See attached schedule.

4. The premium for this policy will be determined by our Manuals of Rules, Classifications, Rates, and Rating Plans. All information required below is subject to verification and change by audit.

SEE EXTENSION OF INFORMATION PAGE

Minimum Premium $ 750

Expense Constant $ 160
Premium Discount $

Assessments and Taxes $

Total Estimated AnnualPremium $ 3,161

☐ This is a Three Year Fixed Rate Policy

Premium Adjustment Period: ☒ Annual; ☐ Semiannual; ☐ Quarterly; ☐ Monthly

Countersigned this Day of ,

K. Antonelli

Authorized Representative

Issued Date: 10/25/2021

Issuing Office **EMPLOYERS PREFERRED INS. CO.**
P.O. BOX 539003
HENDERSON, NV 89053-9003

Issued Date 10/25/2021
WC990630 (5/98 Ed.)

AGENT COPY