Sparrows Point LLC

August 6, 2013

Mr. Andrew Fan, PE
US EPA Region III, 3LC20
1650 Arch Street
Philadelphia, PA 19103-2029

Ms. Barbara Brown
Project Coordinator
Maryland Department of the Environment
1800 Washington Blvd.
Baltimore, MD 21230

Re: ***COKE OVEN AREA INTERIM MEASURES DESIGN PLAN CELLS 2 AND 5***

Dear Mr. Fan and Ms. Brown:

Enclosed please find the design plan entitled *Interim Measures – Remediation Designs for Former Coke Oven Area* that outlines Interim Measure designs recommended for the former Coke Oven Area (COA) at Sparrows Point as requested in the US Environmental Protection Agency (EPA) Region III's May 6th, 2013 letter. As identified in the May 6th letter, Interim Measures intended to address groundwater impacts at Cells 2 and 5 were requested to be designed and installed in the COA. This document provides the Interim Measure designs for both Cells 2 and 5. Interim Measures proposed for Cell 5 include a proposed approach to address both the groundwater source area at Cell 4 and downgradient areas at Cell 5 intended to combine efforts for these areas and enhance site remediation efforts.

The design plan includes a schedule for the planning, procurement, construction and installation segment of this project. The projected schedule for the work is based on a start date defined by regulatory approval of the remediation designs. We request that the enclosed schedule be approved and adopted as the schedule for implementation of the Coke Oven Area Interim Measures. We also submit this design and associated schedule with the understanding that there will be an orderly transition of the Consent Decree prior to field implementation of the work. Please contact me should you have questions.

Sincerely,

Russell Becker
Vice President, Remediation

Enclosure

1650 Des Peres Road, Suite 303, St. Louis, Missouri 63131 Ph: 314-835-1515 Fax: 314-835-1616

Interim Measures – Remediation Designs for Former Coke Oven Area

Sparrows Point

1430 Sparrows Point Boulevard, Baltimore, Maryland

Prepared for Sparrows Point, LLC

Prepared by EnviroAnalytics Group, LLC
1650 Des Peres Road, Suite 303
St. Louis, Missouri

August 6 2013

Table of Contents

1 INTRODUCTION 3
1.1 SITE HISTORY 3
1.2 COKE OVEN AREA 3
1.3 OBJECTIVES 5
2 CELL 2 SYSTEM DESIGN & IMPLEMENTATION 6
2.1 SHALLOW BENZENE PLUME – AS/SVE REMEDIATION SYSTEM 6
2.1.1 AS/SVE + CatOx System 6
2.1.2 SVE Recovery Trench and AS Wellpoint Detail 6
2.2 INTERMEDIATE BENZENE PLUME – GW P&T REMEDIATION SYSTEM 7
2.2.1 GW P&T + CatOx System 7
2.2.2 GW Recovery Well Detail 7
2.2.3 Re-Injection Trench Detail 8
3 CELL 3 SYSTEM REPLACEMENT & IMPLEMENTATION 9
3.1 AS/SVE + VGAC System 9
4 CELL 4/5 SYSTEM DESIGN & IMPLEMENTATION 10
4.1 DPE GW Recovery + VGAC System 10
4.2 DPE Recovery Well Detail 11
4.3 Re-Injection Trench Detail 11
5 PROPOSED MONITORING PLAN 12
5.1 Cell 2 – Shallow and Intermediate Benzene Plumes 12
5.2 Cell 4/5 – Shallow Naphthalene Plume 12
5.3 Reporting 12
6 SCHEDULE OF WORK 13

Figures

Number	Title
1-1	Site Location Map
1-2	Cell 2 Site Plan & Cell Layout
1-3	Cell 4/5 Site Plan & Cell Layout
C2-1A	Interim Measures Treatment Components – Cell 2 Recovery Trench and Wells
C2-1B	Interim Measures Treatment Components – Cell 2 Reinjection Trenches
C2-2B	Piping and Instrumentation Diagram – Cell 2 Shallow Plume AS/SVE + CatOx
C2-3A	Process Flow Diagram – Cell 2 Intermediate Plume GW P&T + CatOx
C2-3B	Piping and Instrumentation Diagram – Cell 2 Intermediate Plume GW P&T + CatOx
C4/5-1	Interim Measures Treatment Components – Cells 4/5
C4/5-2	Process Flow Diagram – Cells 4/5
C4/5-3	Piping and Instrumentation Diagram – Cells 4/5

1 INTRODUCTION

As of September 14, 2012, the former RG Steel Sparrows Point Facility in Sparrows Point, Maryland (Site) was purchased by Sparrows Point, LLC (SPL). The Site is comprised of approximately 3,100 acres, in total, including the area known as Coke Point. The focus of this document is to provide a design plan outlining Interim Measures recommended for Coke Point as requested in the United States Environmental Protection Agency (EPA) Region III's May 6th, 2013 letter. The physical address of the Site is 1430 Sparrow Point Boulevard, Baltimore, Maryland 21219.

Coke Point has several remediation areas, each labeled as a Cell. A Site Location Map is provided as **Figure 1-1**. As identified in the May 6th, 2013 letter from the EPA, Interim Measures have been requested to be designed and installed in the Coke Point Area intended to address identified groundwater impacts at Cells 2 and 5. The area comprising Cell 2 was formerly a coal storage area, and it has two groundwater components – a shallow dissolved benzene plume, as well as a separate intermediate zone dissolved benzene plume. The area comprising Cell 5 includes the dissolved naphthalene plume located towards the turning basin to the south and east of Cell 4. This document provides the Interim Measure designs for both Cells 2 and 5. Interim Measures proposed for Cell 5 include an effort to address both the groundwater source area of the naphthalene at Cell 4 as well as address the downgradient dissolved plume. This design layout is intended to combine efforts from Cell 4 and Cell 5 and enhance site remediation efforts and will be referenced from this point on as the Cell 4/5 Interim Measure.

1.1 SITE HISTORY

The Sparrows Point site encompasses approximately 3,100 acres located on a peninsula within the Coastal Plain Physiographic Province. The facility is physically positioned in the mouth of the heavily industrialized and urbanized Baltimore Harbor / Patapsco River region. A land connection to the northeast links the peninsula with the adjacent community of Edgemere.

From the late 1800s until 2012, the Sparrows Point facility was used in the production and manufacturing of steel. Iron and steel production operations and processes at the site included raw material handling, coke production, sinter production, iron production, steel production, and semi-finished and finished product preparation. In 1970, Sparrows Point was the largest steel facility in the United States, producing hot and cold rolled sheets, coated materials, pipes, plates, and rod and wire. The steelmaking operations at the facility ceased in fall 2012, and the site is scheduled for demolition and potential redevelopment over the next three years.

1.2 COKE OVEN AREA

The Coke Oven Area (COA) encompasses approximately 150 acres of the Coke Point peninsula that makes up the southwestern most portion of Sparrows Point. The Coke Point peninsula is bordered to the west and south by the Patapsco River, to the east by the Turning Basin, and to

the north by the former steelmaking operations areas. Coke Point is a man-made land mass composed of slag-fill materials placed over native geologic materials. The slag fill ranges in thickness from approximately 10 to 25 feet.

From the 1930s to 1991, the COA was operated for the production of coke used in the on-site steelmaking process. Off-gases from the coke ovens were treated by the coal chemical recovery system. The system consisted of several individual plants that were located in the COA and included coal chemical plants, the benzene and litol (benzol) plants, hydrogen cyanide strippers, and the desulfurization and sulfur recovery plant. The benzol plants were used for the purification of light oil into benzene, toluene, and xylene, and operated from the late 1940s through 1986.The former coal tar area is location in the southeast portion of the COA and coal tar produced as part of the coking process was historically stored in this area.

The COA is made land comprised of slag fill placed over natural sediments comprised of: 1) recent fluvial sediments deposited by the Patapsco River, and 2) the underlying Talbot Formation. The slag fill contains the uppermost hydrostratigraphic unit (Slag Fill Unit or shallow zone) at the COA. This unit is characterized by unconfined groundwater that occurs approximately 10 feet below ground surface (bgs). Shallow groundwater movement at the COA generally is radial toward surrounding surface water bodies. Throughout much of the COA, the Slag-Fill unit is underlain by finer-grained silts and clays that comprise upper layers of the Talbot Formation and restrict downward migration of groundwater. In these areas, groundwater flow in the Slag-Fill Unit is separated from groundwater flow in any underlying coarse-grained beds or lenses. In some COA areas, the Slag-Fill Unit is directly underlain by and connected to the coarser grained sand lenses within the Talbot Formation (intermediate zone). In these areas, the Slag-Fill and Upper Talbot Units form a single groundwater flow system.

COA groundwater analytical results indicate that VOCs and SVOCs (predominately benzene and naphthalene) have impacted groundwater. The areal extent of the VOCs and SVOC is confined to the southwestern fill portion of the Sparrows Point peninsula and has not migrated to the area north of the COA. The maximum VOC concentrations (predominately benzene) are located at the northwest portion of the COA. Groundwater with elevated VOCs has migrated toward the southwest and northwest of the COA.

SVOC concentrations (predominately naphthalene) are more evenly distributed, and the maximum concentrations are located on the eastern half of the COA. VOC and SVOC concentrations generally decrease to below their respective reporting limits or exhibit a significant decreasing trend toward the laboratory reporting limits in all samples collected from the lower groundwater zone piezometers. Light non aqueous phase liquid (LNAPL) is also present and currently being addressed at Cell 6 at the COA.

1.3 OBJECTIVES

The objective for this Interim Measures Remediation Design document is to provide engineering designs to capture and remediate dissolved groundwater plumes from Cells 2 and 4/5 located as shown in Figure 1-1. The design proposed for Cell 2 includes the installation of an air sparge/soil vapor extraction (AS/SVE) recovery system to address the shallow groundwater, as well as a groundwater pump and treat (GW P&T) system to address the intermediate groundwater. Dissolved benzene is the primary driver for Cell 2. A Site Plan and Cell Layout for Cell 2 is provided in Figure 1-2.

The design proposed for Cell 4/5 is being driven by the dissolved naphthalene plume proximate to Cell 4 in the shallow groundwater. In this case, remediation efforts are going to target the naphthalene source area, which is located in Cell 4 and the dissolved plume identified as Cell 5. The design proposed for Cell 4/5 is a dual phase extraction (DPE) system which will use high vacuum extraction to recover both groundwater and soil vapor. A Site Plan and Cell Layout for Cell 4/5 is provided in Figure 1-3.

2 CELL 2 SYSTEM DESIGN & IMPLEMENTATION

2.1 SHALLOW BENZENE PLUME – AS/SVE REMEDIATION SYSTEM

The shallow groundwater zone contains dissolved benzene concentrations around 20,000 parts per billion (ppb). The shallow groundwater zone ranges from approximately 4 or 5 feet below ground surface (bgs) to approximately 15 feet bgs. The remediation system involves introducing air bubbles below the water table in an effort to promote the volatilization of benzene and other dissolved volatile organic compounds (VOCs), and then recovering the soil vapor generated via low vacuum extraction. The vapors recovered would be sent to a catalytic oxidizer in order to destroy the VOCs prior to exhausting the air stream to the atmosphere. The overall Cell 2 system layouts for both the shallow plume and the intermediate plume are provided as **Figures 1-2, C2-1A** and **C2-1B**.

2.1.1 AS/SVE + CatOx System

The remediation concept is to operate an air sparging system, recover stripped VOCs, and destroy those captured VOCs prior to the air stream being released to the atmosphere (AS/SVE + CatOx System). At present, there is an existing AS/SVE system with a 300 cubic feet per minute (cfm) oxidizer being intermittently operated in a pulsed recovery mode at Cell 3. That existing system will be moved from Cell 3 and installed at Cell 2 for full time operation. The Piping and Instrumentation Diagram for the Cell 2 Shallow Plume remediation efforts are provided in **Figures C2-2B**.

2.1.2 SVE Recovery Trench and AS Wellpoint Detail

The delivery and recovery systems include the use of air sparge points and a horizontal vapor extraction trench. Based on previous design information, it is proposed to install eight (8) air sparge points along a 500 feet long stretch near the shore line of Cell 2.

- Air sparge zone: 8 – 2-inch diameter AS points @ approximately 56 ft spacing, center to center (C-C)
    - Installed to 15 ft -17 ft bgs (bottom of slag fill)
    - Bottom 2 ft of each point to be screened with 20-slot screen
    - Blowing ambient air into subsurface to strip volatiles

- Recovery trench
    - 500 ft of horizontal, 4-inch diameter perforated pipe (or 20-slot screen) installed to a total depth (TD) of 5 ft
    - 5 vertical 4-inch risers spaced every 100 ft, C-C
    - Top 2 ft is a clay (or similar low permeable material) cap in order to prevent pulling surface air through slag backfill
    - Geotextile fabric @ 2 ft bgs (under clay)
    - Granular screened slag backfill from 2 ft -5 ft
    - Horizontal recover piping located approximately 3 ft bgs (above water table)

- Recovered vapor sent to oxidizer for destruction prior to venting to atmosphere

2.2 INTERMEDIATE BENZENE PLUME – GW P&T REMEDIATION SYSTEM

The intermediate groundwater zone contains dissolved benzene concentrations around 400,000 ppb. The intermediate groundwater zone ranges from approximately 20 feet bgs to approximately 40 to 45 feet bgs. The remediation system involves pumping groundwater out of the impacted zone, addressing water quality issues (anti-scalants and pH adjustments, if necessary), sending the recovered fluids into a low profile air stripper, and then sending the treated groundwater to re-injection trenches up-gradient and introducing them to the shallow zone. The off-gas from the air stripper containing the volatilized benzene and other VOCs would be diverted to an oxidizer where it would be destroyed prior to the air stream entering the open atmosphere. The overall Cell 2 system layouts for both the shallow plume and the intermediate plume are provided as **Figures 1-2, C2-1A** and **C2-1B**.

2.2.1 GW P&T + CatOx System

The remediation concept is to operate a pump and treat groundwater system with a low profile air stripper that then utilizes an oxidizer to destroy all VOC vapors generated prior to exhausting to the atmosphere (GW P&T + CatOx System). The design flow is for a maximum of 40 gallons per minute (gpm), and based on the dissolved concentrations of iron and manganese, it is estimated that some pretreatment prior to entering the low profile air stripper will be necessary in order to optimize its efficiency. Therefore, two equalization tanks will be utilized, along with bag filters, prior to entry into the air stripper. Once the water has traveled through the air stripper, it will go through one more set of bag filters prior to being discharged to the subsurface, upgradient of the plume, via two re-injection trenches. Due to the concentrations of benzene present, the air flow required through the air stripper will require a larger capacity oxidizer than the one associated with the AS/SVE system for the shallow plume. This oxidizer will need to be sized to handle up to a 600 cfm air flow. The Process Flow Diagram and the Piping and Instrumentation Diagram for the Cell 2 Shallow Plume remediation efforts are provided as **Figures C3-1A** and **C3-1B.**

2.2.2 GW Recovery Well Detail

The recovery and re-injection systems include the use of groundwater recovery wells and two horizontal injection trenches. Based on previous design information, it is proposed to install six (6) recovery wells along a 500 feet long stretch near the shore line of Cell 2.

- 6 – 4-inch diameter GW RWs @ approximately 83 ft spacing, C-C
    - Installed to 40-45 ft bgs (intermediate sand zone)
    - Bottom 15 ft of each RW screened with 20-slot screen
    - An electric pump in each RW, resting approximately 7-10 ft above the bottom of the well

- Recovered GW Treatment
    - Enters stabilization tank (anti-scalants added and pH adjustments made)
    - Enters low profile air stripper
    - Off-gas sent to Electric Oxidizer for destruction
    - Treated groundwater pumped to re-injection trenches for recirculation in shallow GW zone

2.2.3 Re-Injection Trench Detail

The re-injection trenches will be installed into the shallow slag, allowing the water table to form an engineered mound (designed to act as a barrier for the shallow benzene plume), as well as creating a "flushing" system for the plume between the trench and the AS/SVE system components. The discharge pipe in each trench will have two cleanouts, one on each end, in case bio-fouling or scaling become an issue and the discharge pipe needs maintenance.

- Two 115 ft long re-injection trenches
    - Each installed to 5 ft bgs
    - Granular screened slag backfill from ground surface to 5 ft bgs
    - 100 ft of 3-inch diameter perforated pipe (or 20-slot screen) with angled cleanouts (to surface) on each end of pipe & load pipe from remediation system located in center of 100 ft stretch
    - Horizontal piping located approximately 3.5 ft bgs (approximately one foot above the static depth to groundwater)

3 CELL 3 SYSTEM REPLACEMENT & IMPLEMENTATION

The shallow dissolved benzene plume located at Cell 3 has undergone remediation via an AS/SVE system that utilizes an oxidizer to destroy all vapor being collected. During the course of operation to date during 2013, the pretreatment effluent concentrations have dropped off and are not sustaining the operation of the catalytic oxidizer without substantial electric supplementation. Therefore, as the system at Cell 3 is sized appropriately for the proposed AS/SVE system at Cell 2, it will be disconnected at Cell 3 and moved. In its place at Cell 3, a new AS/SVE system which utilizes granular activated carbon specifically designed for vapor treatment (VGAC) will be installed

3.1 AS/SVE + VGAC System

Based on the actual operations data from the previous system at Cell 3, it has been determined that the replacement AS/SVE system can be slightly downsized. The previous AS blower unit has a 30 horsepower (hp) motor, and it has been determined that the new system can step down in size to a 20 hp motor for the AS blower. In addition, the VOC concentrations in the recovered vapors have diminished to a point that they can be passed through VGAC instead of a catalytic oxidizer. The replacement system will essentially be the same as the existing system, as well as operating nearly the same way, with the exception of these two modifications.

4 CELL 4/5 SYSTEM DESIGN & IMPLEMENTATION

There are two cells which are associated with the shallow, dissolved phase naphthalene plume located on the eastern side of Coke Point – Cells 4 and 5. Cell 4 is related to the source area from which the naphthalene plume emanates, while Cell 5 is located to address the area between the source area and the shoreline of the Turning Basin. In an effort to address both the source area and the body of the plume, the original remediation concept (presented in the former Groundwater Treatability Evaluation that was submitted with the Groundwater Discharge Permit Application in 2011) has been modified. The revised remediation design now refers to the combination of Cells by being referred to as Cell 4/5, and it is more aggressive by addressing both the source area and the area between the source and the shoreline.

The shallow groundwater zone contains dissolved naphthalene concentrations around 10,000 ppb. The shallow groundwater zone ranges from approximately 10 feet bgs to approximately 15 to 17 feet bgs. The remediation system involves using high vacuum extraction points from which both soil vapor and groundwater are recovered in an effort to promote the volatilization of naphthalene and other dissolved volatile organic compounds (VOCs) as well as the recovery of impacted groundwater. Down-hole groundwater pumps are not advised due to poor water chemistry which could cause significant scaling and maintenance issues. In addition, it is anticipated that DPE recovery points could artificially lower the water table to some extent which would further promote volatilization and soil vapor recovery. All recovered soil vapor and generated off-gas would be sent through VGAC vessels prior to being discharged to the atmosphere. The treated groundwater would be sent to re-injection trenches located up-gradient of the plume. In addition to providing a “flushing” effect across the source area, the introduction of treated water (with a lower pH and lack of dissolved iron and manganese) will eventually help alter the water chemistry inside the source area to a point where bio-augmentation efforts might be more successful than they have been, to date. The overall Cell 4/5 system layout is provided in Figures 1-3 and **C4/5-1**.

4.1 DPE GW Recovery + VGAC System

The remediation concept is to operate a dual phase recovery system with a low profile air stripper (re-injecting the treated groundwater) and utilize VGAC to capture all VOC vapors in the air stream prior to being discharged to atmosphere (DPE GW Recovery + VGAC System). The design fluid flow is for a maximum of 40 gallons per minute (gpm), and based on the dissolved concentrations of iron and manganese, pretreatment will be required prior to entering the low profile air stripper. Pretreatment will occur in two equalization tanks, in series, where adjustments would be made to lower the pH (currently around 11.6) down to more neutral levels (7.5-8). In addition to pH adjustments, anti-scalants must be added to address the high dissolved iron and manganese concentrations. Once the water chemistry is altered, the groundwater would move through bag filters and then into a low profile air stripper. The off-gas from the air stripper would be merged with the recovered soil vapor and sent through the VGAC vessel to capture the VOCs prior to being exhausted to the atmosphere. Once the water has traveled through the air stripper, it will go through one more set of bag

filters prior to being discharged to the subsurface, up-gradient of the plume, via two re-injection trenches. The Process Flow Diagram and the Piping and Instrumentation Diagram for the Cell 4/5 remediation efforts are provided as **Figures C4/5-1** through **C4/5-3**.

4.2 DPE Recovery Well Detail

The recovery and re-injection systems include the use of dual phase (soil vapor and groundwater) recovery wells and two horizontal injection trenches. Based on previous design information, it is proposed to install twelve (12) recovery wells along an approximate 500 feet long stretch down-gradient of the most recent 10,000 ppb isocontour line for naphthalene (between the naphthalene source area and the eastern shore line along the Turning Basin). Due to the slightly shifting nature of the hydraulic gradient and the shape of the source area plume, the line of recovery points will be in the shape of a wide "V" as seen in **Figures 1-3** and **C4/5-1**.

- 12 – 1.5-inch diameter DPE RWs @ approximately 42 ft spacing, C-C
    - Installed to 15-17 ft bgs (to bottom of shallow slag)
    - Bottom 2 ft of each RW screened with 20-slot screen
    - Vapor recovery perforations located between 10-12 ft bgs

4.3 Re-Injection Trench Detail

The re-injection trenches will be installed into the shallow slag at approximately 5 to 7 ft above the natural depth to water, allowing the water to drain back into the formation and hopefully creating a "flushing" system for the plume between the trenches and the DPE system components. The discharge pipe in each trench will have two cleanouts, one on each end, in case bio-fouling or scaling become an issue and the discharge pipe needs maintenance. The trenches will be angled on the up-gradient side to complement the angles of the line of recovery wells on the down-gradient site as seen in **Figures 1-3** and **C4/5-1**. The trench detail is shown in **Figure C4/5-1.**

- Two 115 ft long re-injection trenches
    - Each installed to 5 ft bgs
    - Granular screened slag backfill from ground surface to 5 ft bgs
    - 100 ft of 3-inch diameter perforated pipe (or 20-slot screen) with angled cleanouts (to surface) on each end of pipe & load pipe from remediation system located in center of 100 ft stretch
    - Horizontal piping located approximately 3.5 ft bgs (approximately 7 ft above the static water table)

5 PROPOSED MONITORING PLAN

Groundwater monitoring is proposed in accordance with the procedures outlined in the following sections to provide information suitable to evaluate the effectiveness of the operation of the IMs installed at Cells 2 and 4/5 as well as provide information required by State Discharge Permit No. 11-DP-3746 Special Condition I.E. Groundwater Quality Monitoring.

5.1 Cell 2 – Shallow and Intermediate Benzene Plumes

Groundwater elevation and quality data will be collected from existing and proposed monitoring wells located as shown in Figure 1-2. Groundwater elevation data will be collected initially on a monthly basis from both the shallow and intermediate groundwater zone to evaluate and document the hydrologic response of the groundwater zones to both the pumping and recharge operation of the Cell 2 system. Groundwater sampling will be conducted on a quarterly basis from both the shallow and intermediate groundwater zones and analyzed for VOCs and naphthalene (EPA Method 8260). Reductions in frequency of monitoring may be appropriate after the system has stabilized and will be evaluated as part of the progress reporting.

5.2 Cell 4/5 – Shallow Naphthalene Plume

Groundwater elevation and quality data will be collected from existing and proposed monitoring wells located as shown in Figure 1-3. Groundwater elevation data will be collected on a monthly basis from both the shallow groundwater zone to evaluate and document the hydrologic response of the groundwater zone to both the pumping and recharge operation of the Cell 2 system. Groundwater sampling will be conducted on a quarterly basis from the shallow groundwater zone and analyzed for VOCs and naphthalene (EPA Method 8260). Reductions in frequency of monitoring may be appropriate after the system has stabilized and will be evaluated as part of the progress reporting.

5.3 Reporting

Progress reports will be submitted on a quarterly basis that will provide evaluations for the installed IMs including groundwater levels, associated groundwater elevation contours and flow interpretations, water quality data and effectiveness of the system with respect to mass of VOCs and naphthalene removed from the groundwater. In addition, this design report will be submitted to the Maryland Department of the Environment Water Management Administration for approvals required by the referenced discharge permit.

6 SCHEDULE OF WORK

An implementation schedule of planned work is attached with this document. The projected schedule for the work is based on a start date defined by regulatory approval of the remediation designs. The schedule to procure, construct and operate the cells includes the following tasks:

- Equipment
  Preparing Equipment Request for Bid (RFB)
  RFB to Equipment Vendors, Equipment Vendor Review and Bid Submittals
  Review of Equipment Submittals & Vendor Selection
  Equipment Build Time

- Installation
  Preparing Installation RFB
  RFB to Installers and/or Drillers, Installer/Driller Review and Bid Submittals
  Review of Installer/Driller Submittals & Vendor(s) Selection
  Cell 2 – Drilling
  Cell 4/5 – Drilling
  Cell 2 – Trenching & Piping
  Cell 4/5 – Trenching & Piping

- Permitting
  Air Permit to Construct
  Groundwater Appropriation Permits

- Pre-Installation Site Preparation
  Cell 2 – Clearing & Two System Pads (Gravel)
  Cell 4/5 – Clearing & One System Pad (Gravel)

- Electrical
  Power Drops (Cells 2 and 4/5)
  System Hook-ups (Cells 2, 3, and 4/5)
  Inspection(s)

- Equipment Delivery, Hook-Ups, & Start-up/Testing – Cell 3

- Equipment Delivery, Hook-Ups, & Start-up/Testing – Cell 4/5

- Equipment Delivery, Hook-Ups, & Start-up/Testing – Cell 2 Shallow

- Equipment Delivery, Hook-Ups, & Start-up/Testing – Cell 2 Intermediate

Interim Measures (Cells 2, 3, & 4/5) Implementation Schedule

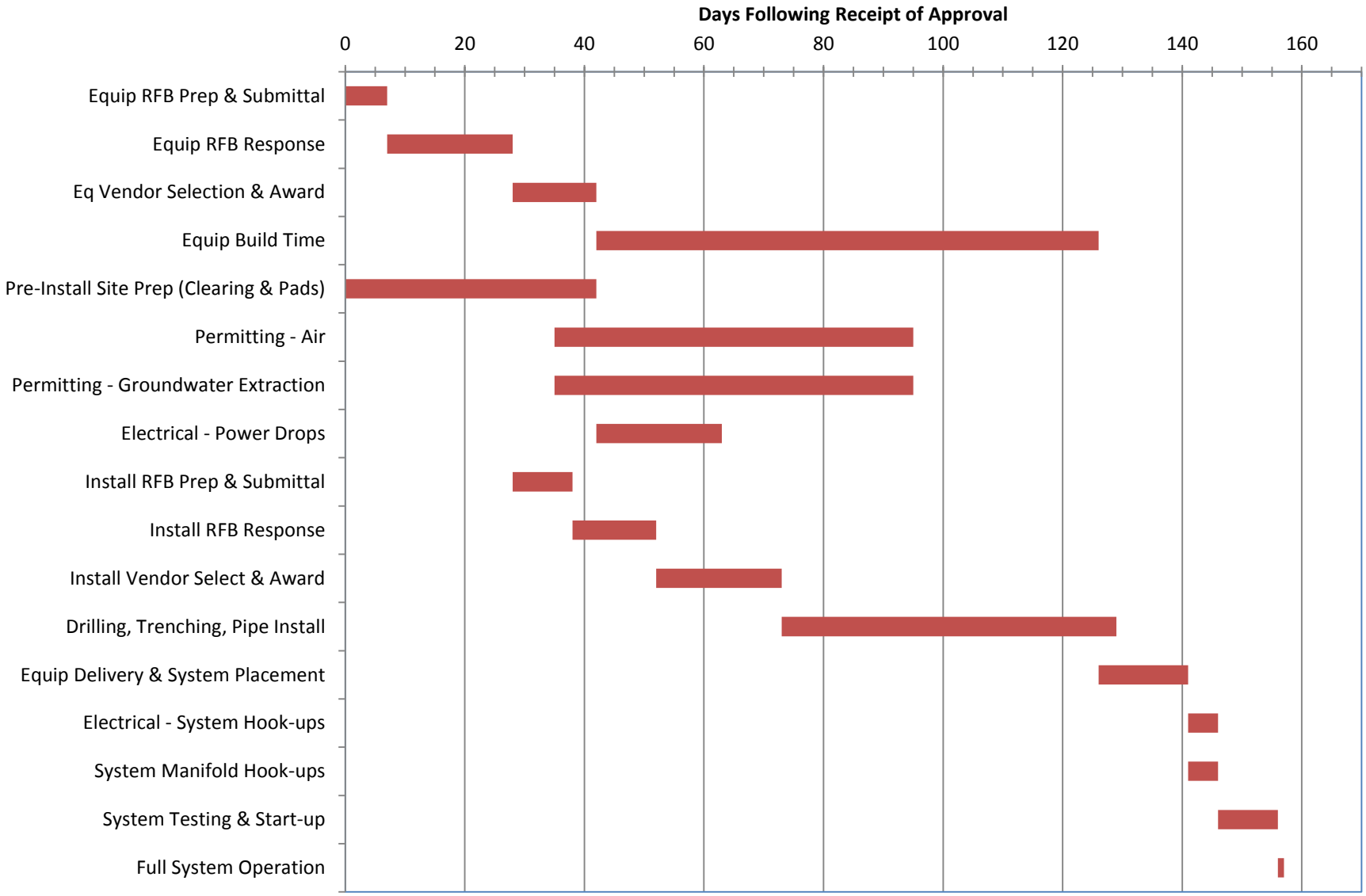

August 2013

Sparrows Point Former Coke Oven Area Interim Measures
Site Location Map

EnviroAnalytics Group

0 187.5 375 750 1,125 1,500 Feet

1 inch = 300 feet

Legend

COA IM Cells

Figure 1-1

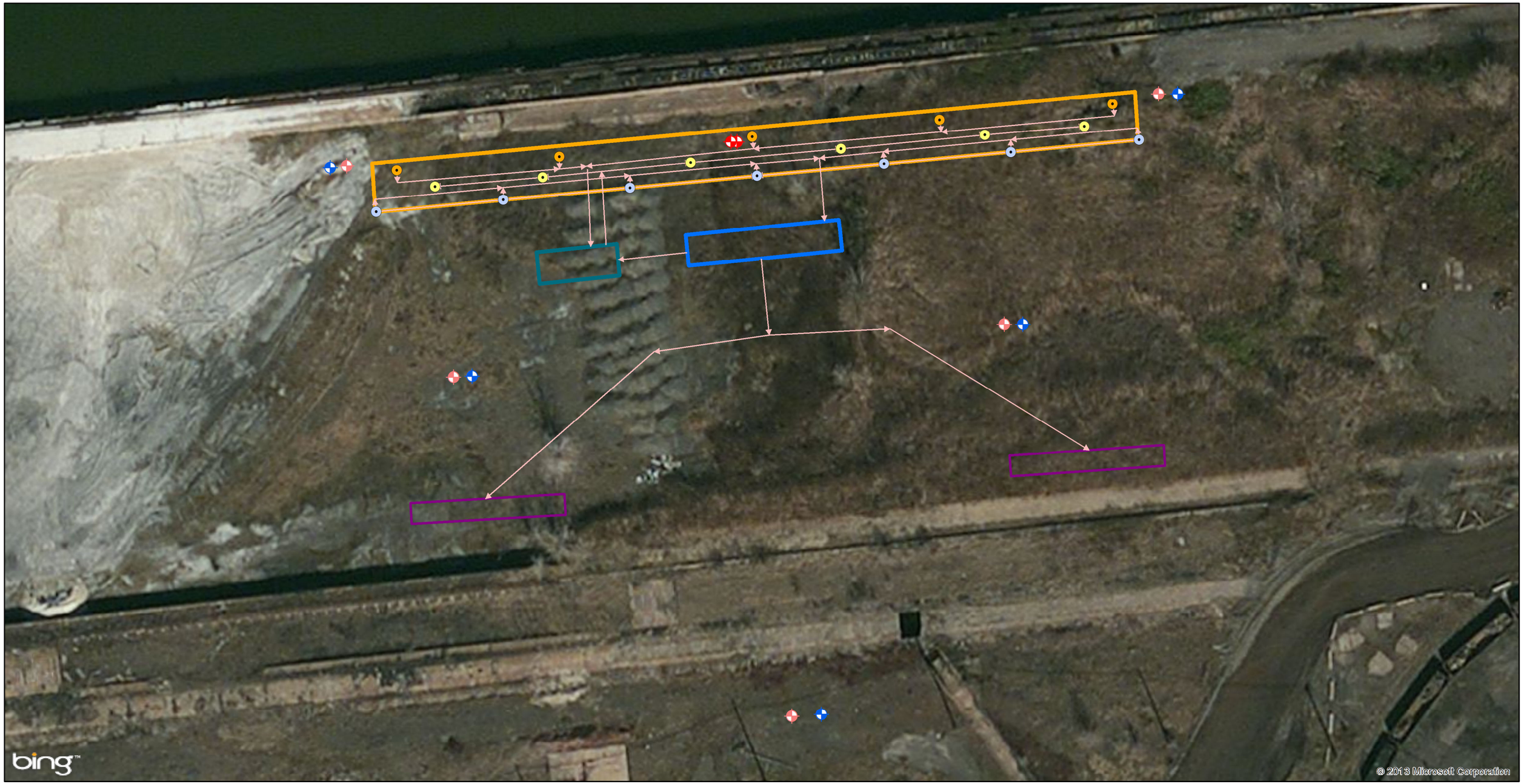

August 2013

Sparrows Point Former Coke Oven Area Interim Measures
Cell 2 Site Plan & Cell Layout

0 37.5 75 150 225 300 Feet

1 inch = 60 feet

Legend

- Cell 2 Existing Monitoring Wells
- Proposed Monitoring Wells Shallow
- Proposed Monitoring Wells Intermediate
- Air Sparge Well
- SVE Recovery Riser
- Intermediate Zone Groundwater Recovery Well
- Piping
- AS/SVE Treatment Equipment
- Groundwater Treatment Equipment
- Re-Injection Trenches
- Extraction Zone

EnviroAnalytics Group

Figure 1-2

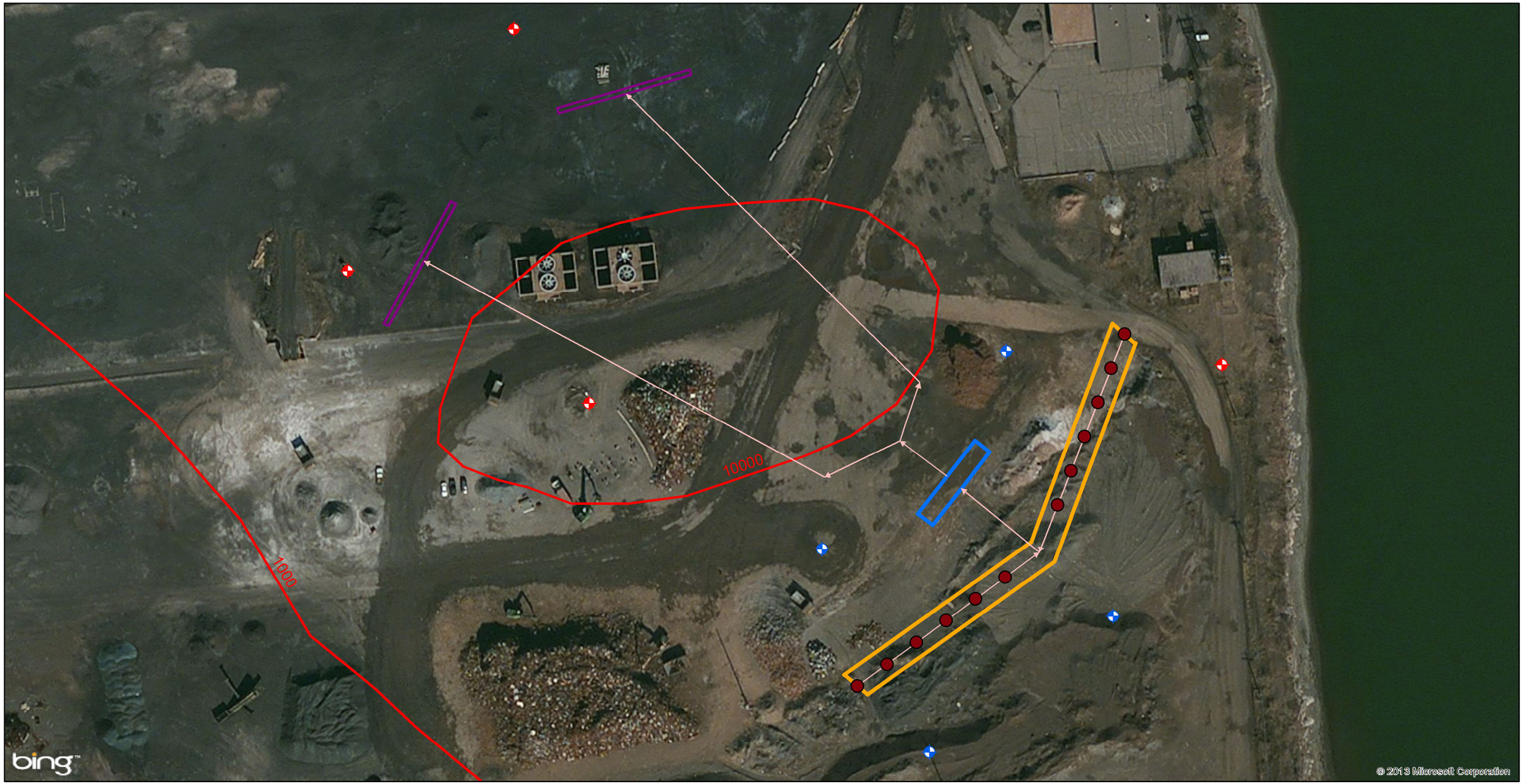

August 2013

Sparrows Point Former Coke Oven Area Interim Measures
Cell 4/5 Site Plan & Cell Layout

0 62.5 125 250 375 500 Feet

1 inch = 100 feet

Legend

- Cell 4 & 5 Existing Monitoring Wells
- Proposed Monitoring Wells Shallow
- Groundwater Extraction Wells
- Piping
- Groundwater Treatment Equipment
- Re-Injection Trenches
- Extraction Zone
- Naphthalene Iso Concentration Shallow Zone

EnviroAnalytics Group

Figure 1-3

Aerial View of Trench and Well Layout

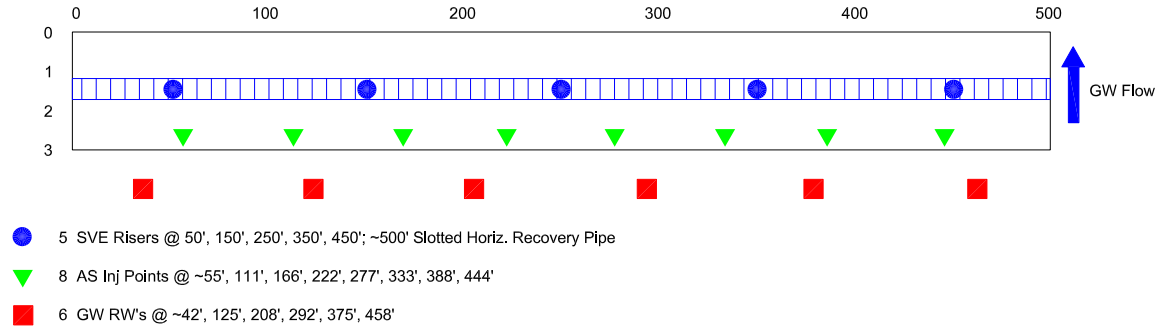

Cross-Section View of Trench and Well Layout

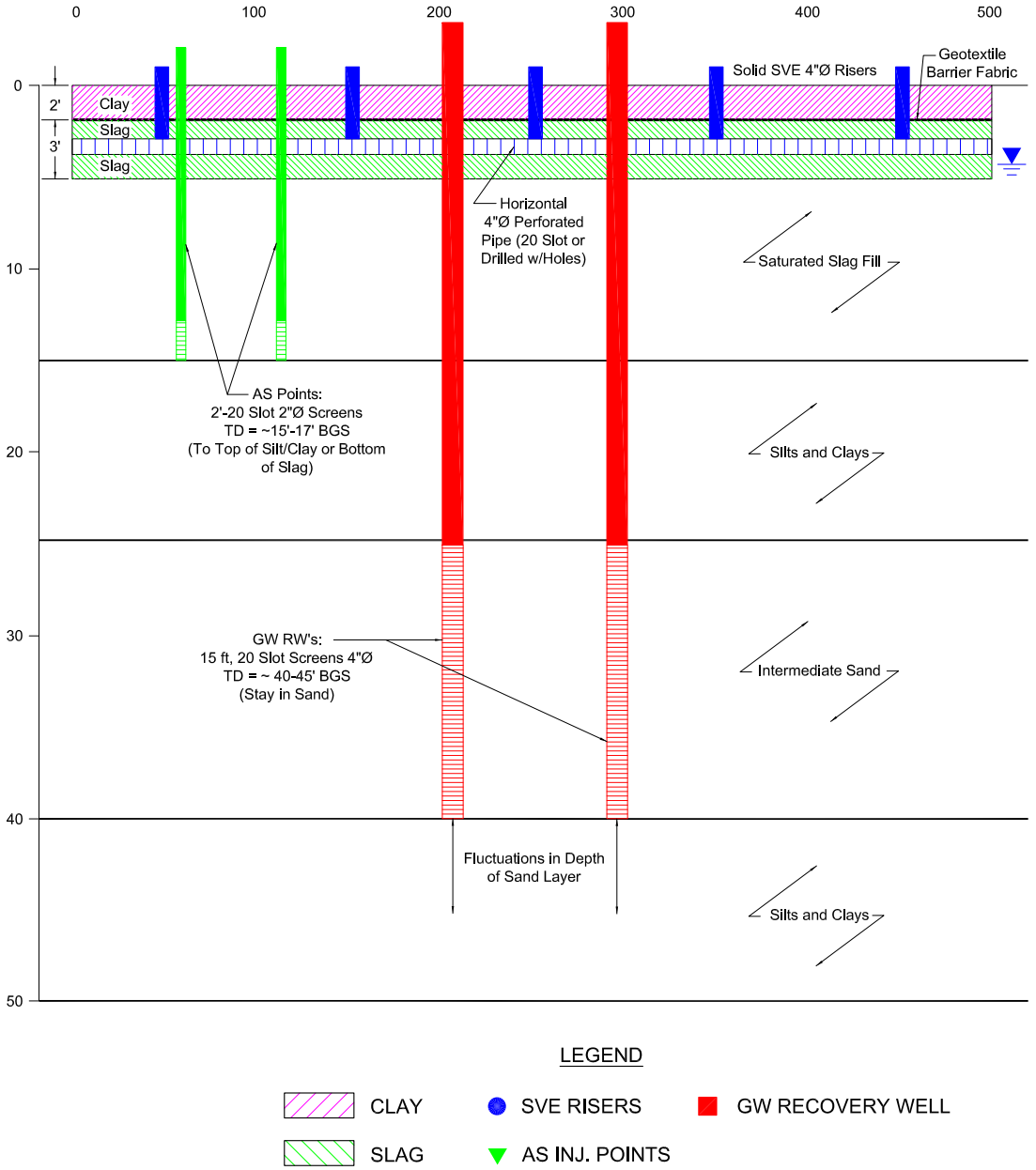

EnviroAnalytics Group

DESIGN: ES	DRAWN: LMc	CHKD.:
DATE: 7/22/13	SCALE: AS SHOWN	REV.:
DRAWING NAME.: Sparrows Point/Fig C2-1A.dwg		

FIGURE C2-1A
Interim Measures Treatment Components
Cell 2 Recovery Trench and Wells
Sparrows Point, LLC

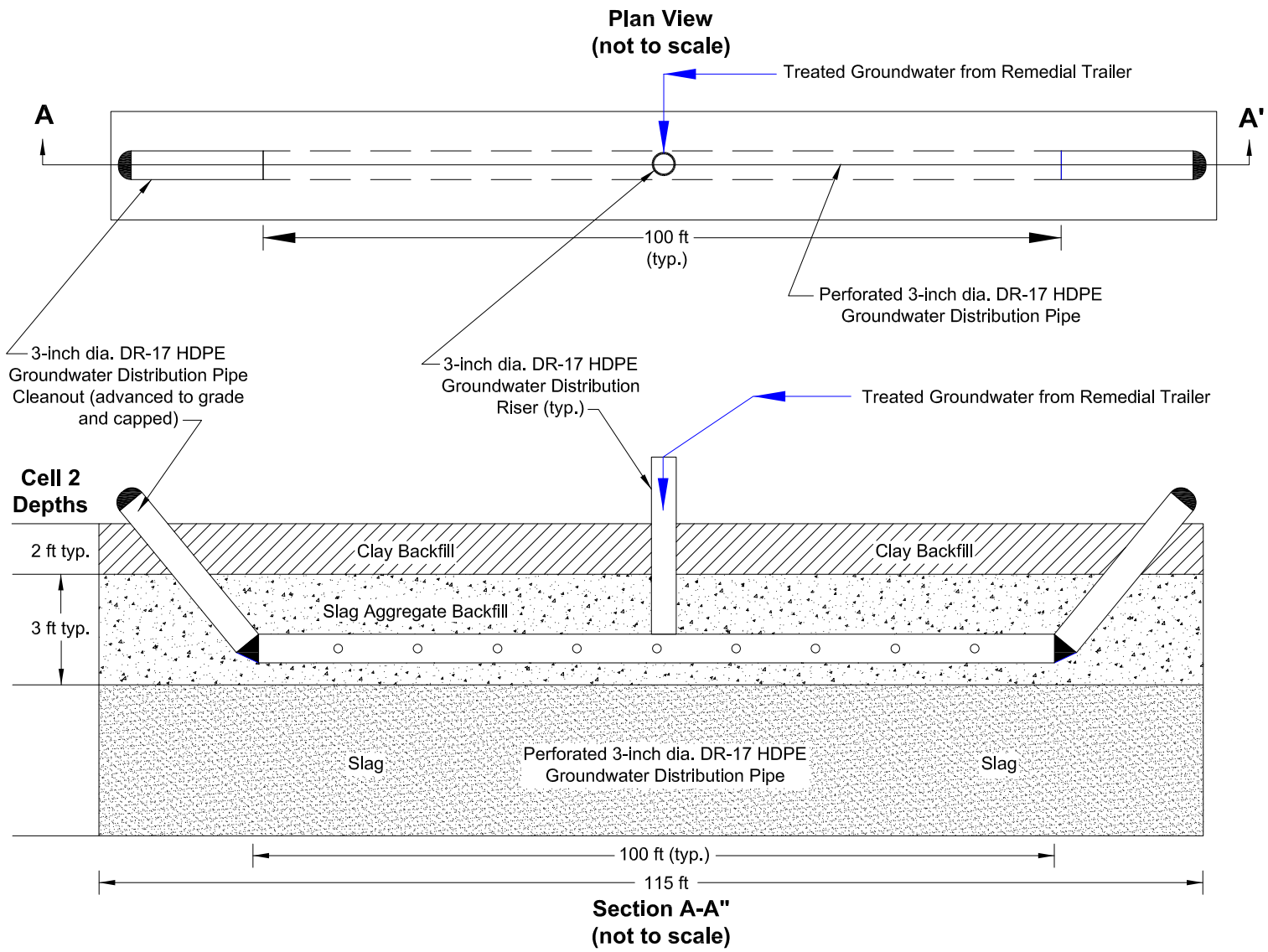

EnviroAnalytics Group

DESIGN: ES	DRAWN: lmc	CHKD.:
DATE: 07/16/13	SCALE: Not to Scale	REV.:
DRAWING NAME: 2013 Sparrows Point\Fig C4-S1.dwg		

FIGURE C2-1B
Interim Measures Treatment Components
Reinjection Trench Layout
Sparrows Point, LLC

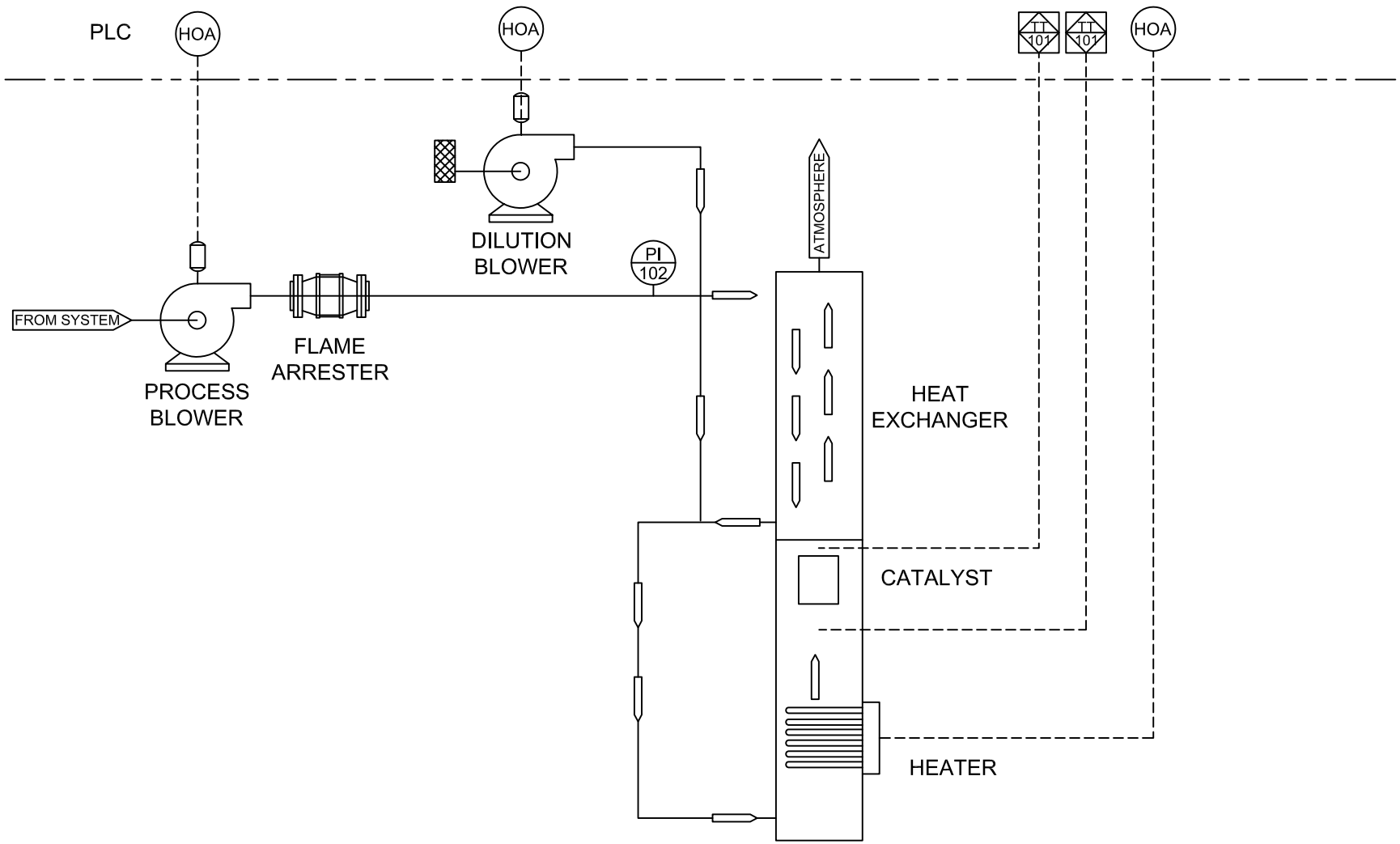

EnviroAnalytics Group

DESIGN: ES	DRAWN:	CHKD.:
DATE: 08/04/13	SCALE: Not to Scale	REV.:
DRAWING NAME: 2013 Sparrows Point\Fig C2-2B		

FIGURE C2-2B
Piping and Instrumentation Diagram
Cell 2 - Shallow Plume AS/SVE + CatOx
Groundwater Treatment System With Oxidizer
Sparrows Point, LLC

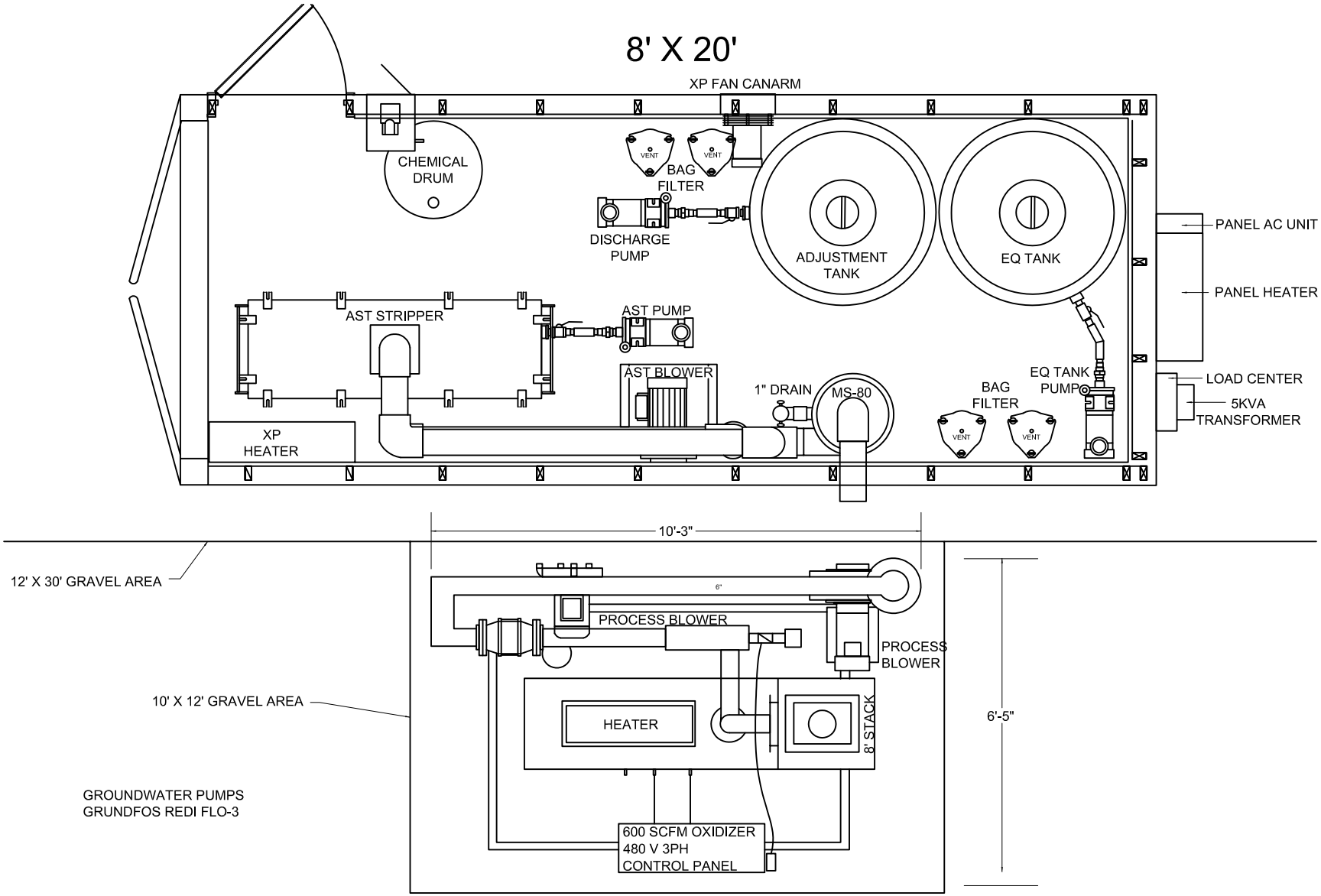

EnviroAnalytics Group

DESIGN: ES	DRAWN:	CHKD.:
DATE: 08/04/13	SCALE: Not to Scale	REV.:
DRAWING NAME: 2013 Sparrows Point\Fig C2-3A		

FIGURE C2-3A
Process Flow Diagram
Cell 2 - Intermediate Plume GW P&T + CatOx
Groundwater Treatment System Oxidizer
Sparrows Point, LLC

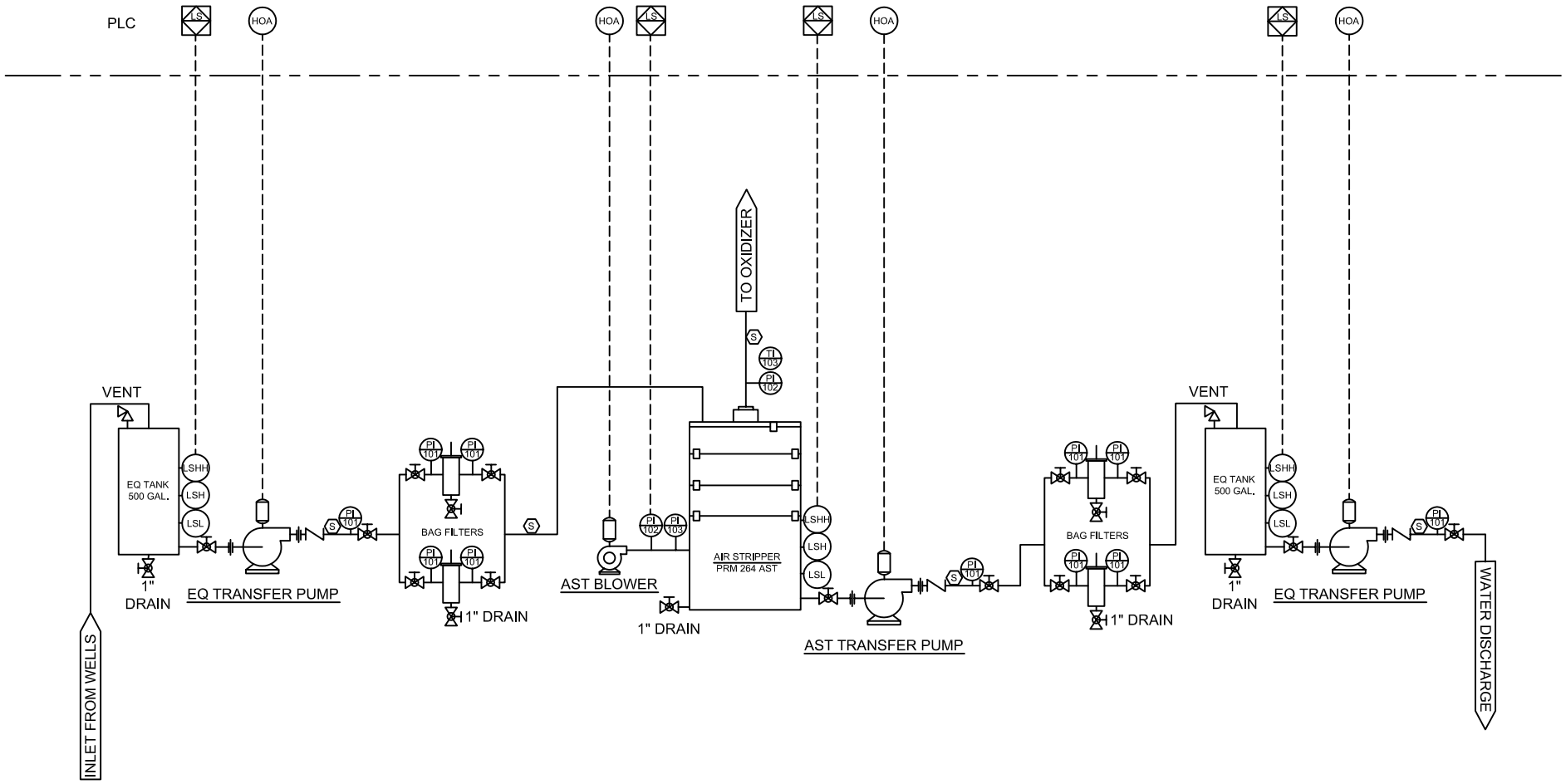

EnviroAnalytics Group

DESIGN: ES	DRAWN:	CHKD.:
DATE: 08/04/13	SCALE: Not to Scale	REV.:
DRAWING NAME: 2013 Sparrows Point\Fig C2-3B		

FIGURE C2-3B
Piping and Instrumentation Diagram
Cell 2 - Intermediate Plume GW P&T + CatOx
Groundwater Treatment System With Oxidizer
Sparrows Point, LLC

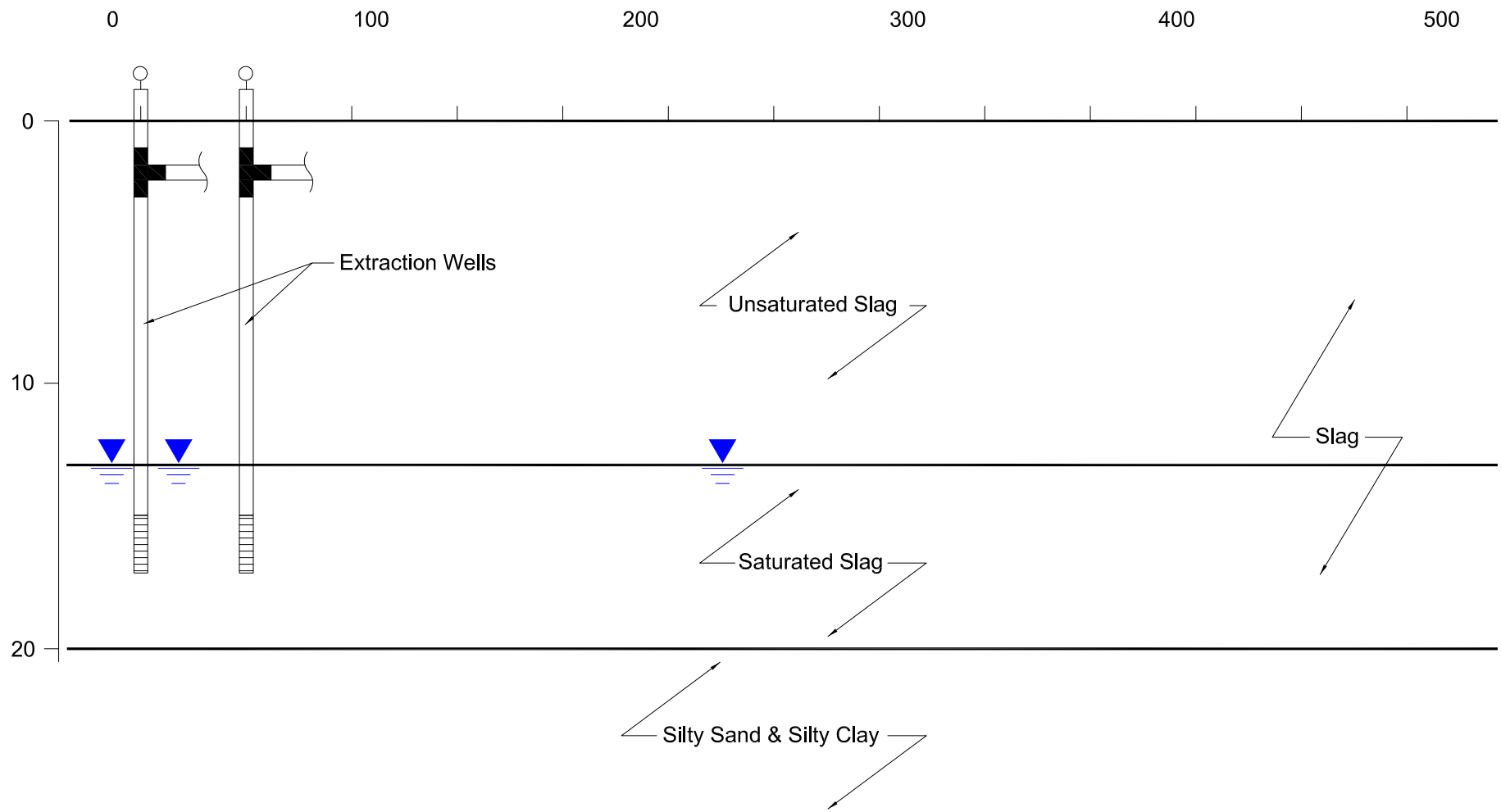

12 Recovery Wells (~15-17' BGS); Exact Configuration Still Under Design; Wells ~40' Apart, C to C

Wells Connected via Subsurface Piping Trench; Well Vaults w/Gauge Port and Sample Port @ Well Head

EnviroAnalytics Group

DESIGN: ES	DRAWN: lmc	CHKD.:
DATE: 07/22/13	SCALE: Not to Scale	REV.:
DRAWING NAME: 2013 Sparrows Point\Fig C4-S1.dwg		

FIGURE C4/5-1
Interim Measures Treatment Components
Cells 4/5
Sparrows Point, LLC

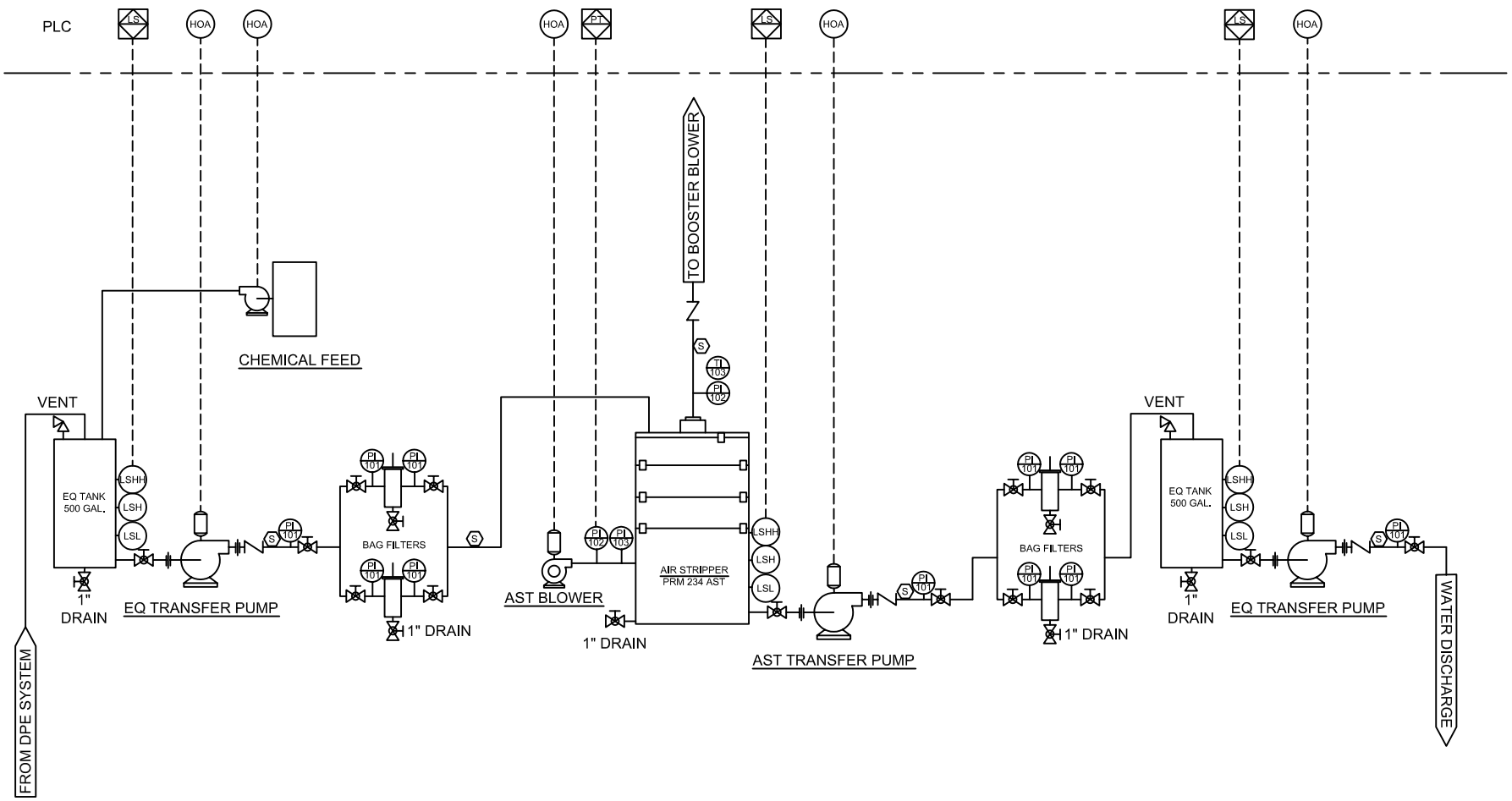

EnviroAnalytics Group

DESIGN: ES	DRAWN:	CHKD.:
DATE: 08/05/13	SCALE: Not to Scale	REV.:
DRAWING NAME: 2013 Sparrows Point\Fig C4/5-2		

FIGURE C4/5-2
Process Flow Diagram
Cells 4/5
Groundwater Treatment System
Sparrows Point, LLC

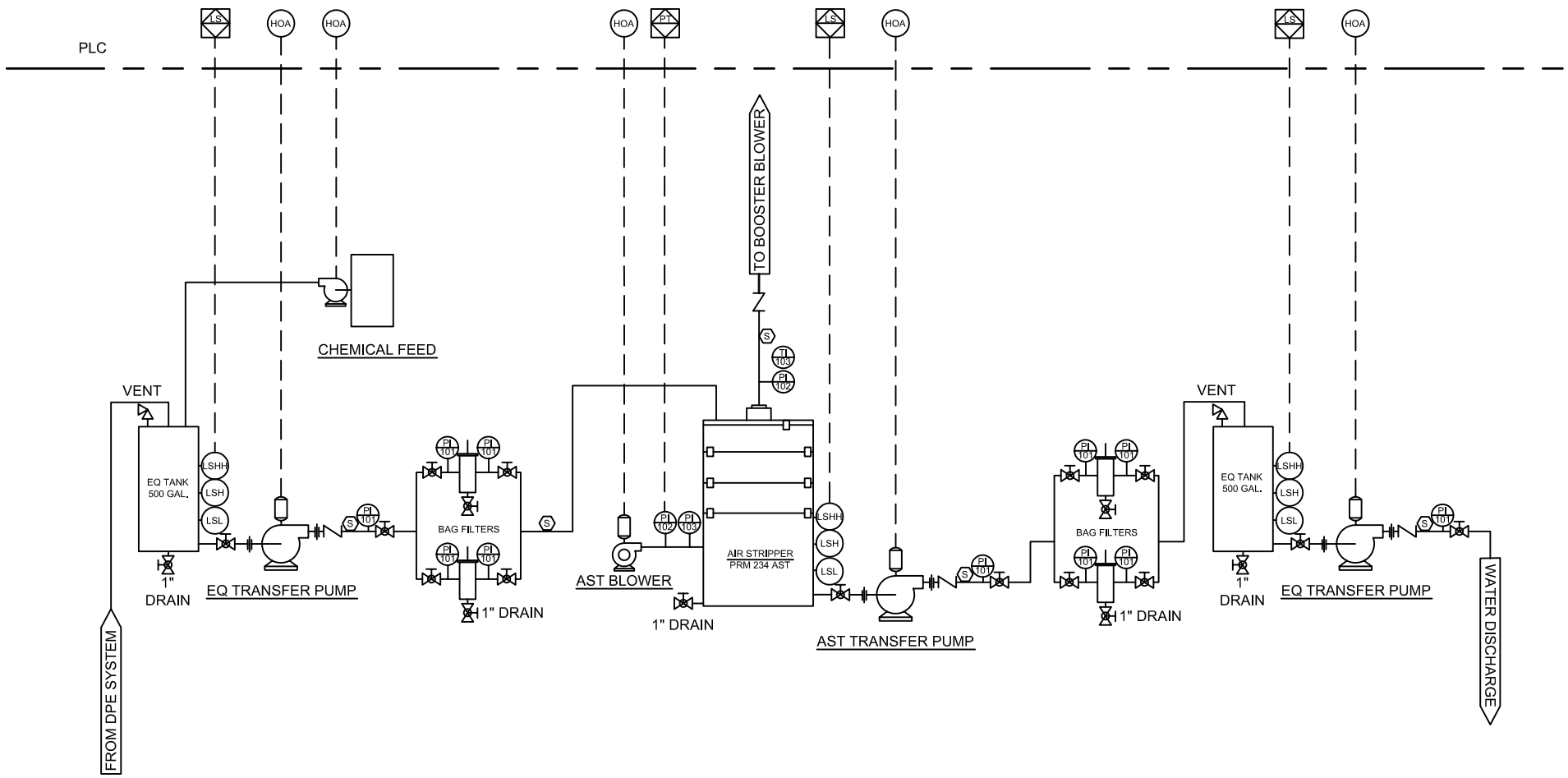

EnviroAnalytics Group

DESIGN: ES	DRAWN:	CHKD.:
DATE: 08/05/13	SCALE: Not to Scale	REV.:
DRAWING NAME: 2013 Sparrows Point\Fig C4/5-3		

FIGURE C4/5-3
Piping and Instrumentation Diagram
Cells 4/5
Groundwater Treatment System
Sparrows Point, LLC