Section B - GRADE STABILIZATION STRUCTURES

5.0 STANDARDS AND SPECIFICATIONS

FOR

PIPE SLOPE DRAIN

Description of Practice

A pipe slope drain is a pipe that is installed to convey surface runoff down the face of unstabilized slopes. It is used to minimize erosion on the slope face. Use of flexible piping is preferred.

Conditions Where Practice Applies

Pipe slope drains are used in conjunction with earth dikes. The dikes direct surface runoff to the slope drain, which conveys concentrated flow down the face of a slope. When used to convey water down an unstabilized fill slope on a road construction project the drainage area to the pipe slope drain will be limited to 2 acres. When used as an inflow protection device the drainage area will be 5 acres.

Table 6 Design Criteria for Pipe Slope Drain

Size	Diameter (inches)	Pipe/Tubing Maximum Drainage Area (Acres)
PSD-12	12	0.5
PSD-18	18	1.5
PSD-21	21	2.5
PSD-24	24	3.5
PSD-(2) (24)[1]	24	5.0

Inlet

At the inlet of the pipe slope drain, the height of the earth dike shall be at least two times the pipe diameter and measured from the invert of the pipe . A standard flared entrance section shall be installed and secured at the inlet to the pipe slope drain with a watertight connection. To prevent erosion, geotextile fabric shall be placed under the inlet and shall extend 5' in front of the inlet and be keyed in 6" on all sides.

Outlet

When the drainage area is disturbed, the pipe slope drain shall outlet into a sediment trap or basin, or a stable conveyance that leads to a trap or basin. The point of discharge shall be as far away from the trap or basin outlet structure as possible. When the drainage area is stabilized, the pipe slope drain shall outlet onto a stabilized area at a non-erosive velocity. The point of discharge may be protected by rock outlet protection.

[1] Due to the height limitations on earth dikes, the maximum pipe diameter for pipe slope drain is 24". For drainage areas over 3 1/2 acres two 24" pipes shall be used. A minimum spacing of 2D (4 feet) is required between pipes.

Construction Specifications

1. The Pipe Slope Drain (PSD) shall have a slope of 3 percent or steeper.

2. The top of the earth dike over the inlet pipe shall be at least 2 times the pipe diameter measured at the invert of the pipe.

3. Flexible tubing is preferred. However, corrugated metal pipe or equivalent PVC pipe can be used. All connections shall be watertight.

4. A flared end section shall be attached to the inlet end of pipe with a watertight connection. Geotextile Class E[2] or better shall be placed under the inlet of the pipe slope drain and shall extend out 5' from the inlet. The geotextile fabric shall be keyed in on all sides.

5. The Pipe Slope Drain shall be securely anchored to the slope. Spacing for anchors shall be as provided by manufacturer's specification. In no case shall less than two (2) anchors be provided, equally spaced along the length of pipe. These details should be provided by pipe suppliers.

6. The soil around and under the pipe and end section shall be hand tamped in 4 inch lifts to the top of the earth dike.

7. Whenever possible where a PSD drains an unstabilized area, it shall outlet into a sediment trap or basin. If this is not possible then the slope drain will discharge into a stable conveyance that leads to a sediment trap or basin. When discharging into a trap or basin the PSD shall discharge at the same elevation as the wet pool elevation. The discharge from the PSD must be as far away from the sediment control outlet as possible.

8. When the drainage area is stabilized, the PSD shall discharge onto a stabilized area at a non-erosive velocity. 4"- 7" stone underlain with Geotextile Class C[3] shall be employed as necessary.

9. Inspection and any required maintenance shall be performed periodically and after each rain event.

10. The inlet must be kept open at all times.

[2,3] Refer to Table 27.

This Page Intentionally Left Blank

DETAIL 4 – PIPE SLOPE DRAIN

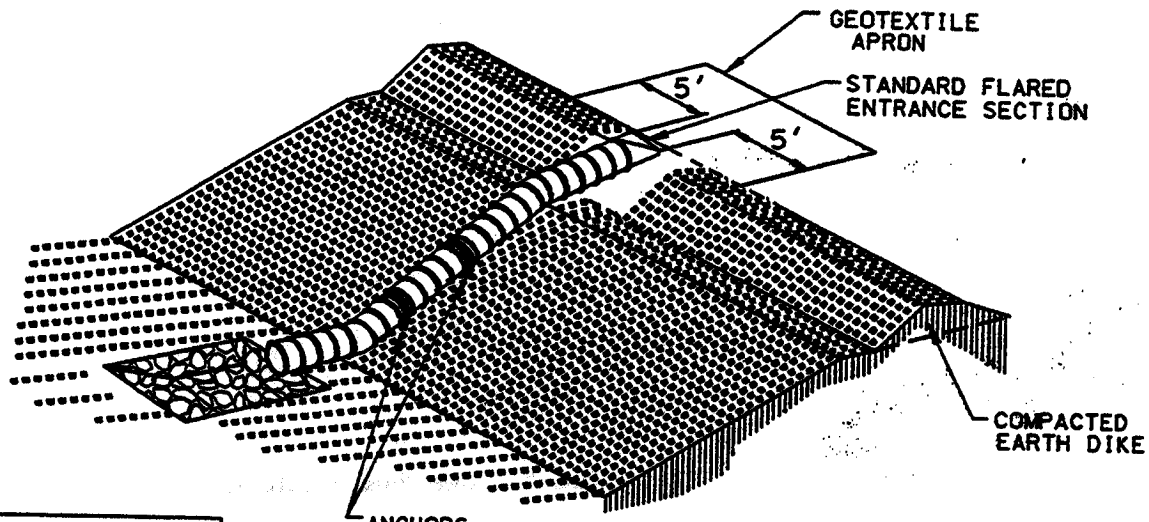

DISCHARGE INTO A STABILIZED WATER-COURSE, SEDIMENT TRAPPING DEVICE, OR INTO A STABILIZED AREA AT A NON-EROSIVE VELOCITY. REF: 18.0 ROCK OUTLET PROTECTION

STANDARD SYMBOL

PSD – 12

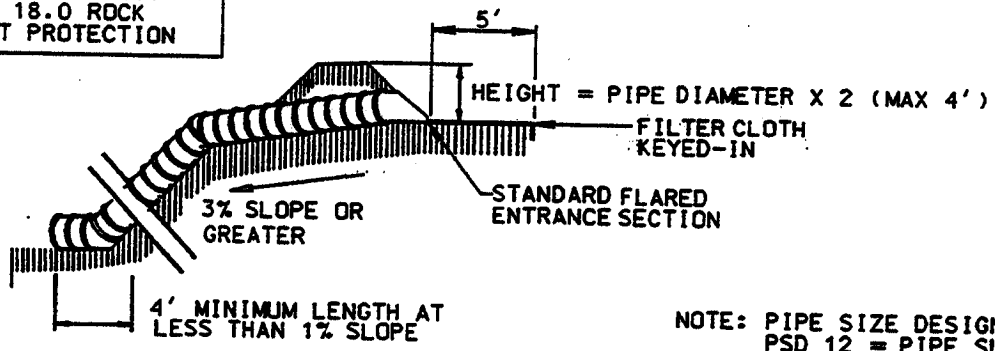

NOTE: PIPE SIZE DESIGNATION IS: PSD 12 = PIPE SLOPE DRAIN WITH A 12" DIAMETER PIPE.

Table 6 Design Criteria for Pipe Slope Drain

Size	Pipe/Tubing Diameter (D) in	Maximum Drainage Area (Acres)
PSD-12	12	0.5
PSD-18	18	1.5
PSD-21	21	2.5
PSD-24	24	3.5
PSD-24 (2)	24	5.0

PIPE SLOPE DRAIN

Construction Specifications - Pipe Slope Drain

1. The Pipe Slope Drain (PSD) shall have a slope of 3 percent or steeper.

2. The top of the earth dike over the inlet pipe shall be at least 2 times the pipe diameter measured at the invert of the pipe.

3. Flexible tubing is preferred. However, corrugated metal pipe or equivalent PVC pipe can be used. All connections shall be watertight.

4. A flared end section shall be attached to the inlet end of pipe with a watertight connection. Filter cloth shall be placed under the inlet of the pipe slope drain and shall extend out 5' from the inlet. The filter cloth shall be "keyed in" on all sides.

5. The Pipe Slope Drain shall be securely anchored to the slope by staking at the grommets provided. Spacing for anchors shall be as provided by manufacturer's specification. In no case shall less than two (2) anchors be provided, equally spaced along the length of pipe. These details should be provided by pipe suppliers.

6. The soil around and under the pipe and end section shall be hand tamped in 4 inch lifts to the top of the earth dike.

7. All pipe connections shall be watertight.

8. Whenever possible where a PSD drains an unstabilized area, it shall outlet into a sediment trap or basin. If this is not possible then the slope drain will discharge into a stable conveyence that leads to a sediment trap or basin. When discharging into a trap or basin the PSD shall discharge at the same elevation as the wet pool elevation. The discharge from the PSD must be as far away from the sediment control outlet as possible.

9. When the drainage area is stabilized, the PSD shall discharge onto a stabilized area at a non-erosive velocity.

10. Inspection and any required maintenance shall be performed periodically and after each rain event.

11. The inlet must be kept open at all times.

6.0 STANDARDS AND SPECIFICATIONS

FOR

RIP-RAP INFLOW PROTECTION

Definition

A temporary or permanent, lined drainageway installed to convey concentrated runoff into sediment traps and basins or down steep slopes as applicable. Rip-rap Inflow Protection consists of the installation of rock or recycled concrete equivalent in a flow channel for stabilization.

Purpose

The purpose of Rip-rap Inflow Protection is to provide stable conveyance of concentrated runoff down steep slopes, (i.e. into temporary sediment traps and basins) thereby preventing erosion of the flow channel.

Conditions Where Practice Applies

Rip-rap Inflow Protection is required where the slope of a drainage way contributing to a sediment trap or basin exceeds 10:1 but is less than 4:1. Runoff may be directed to the inflow device by means of dikes or swales.

Design Criteria

Rip-rap Inflow protection shall be 4"- 12" rip-rap (min.), underlain with Geotextile Class C[4] and placed from the ditch overfall elevation to the bottom of the trap or basin when the inflow slope is between 4:1 and 10:1. Slopes flatter than 10:1 shall be stabilized in accordance with Temporary Swale or Earth Dike criteria as applicable. For slopes steeper than 4:1, see Gabion Inflow Protection.

Construction Specifications

1. Rip-rap Inflow Protection shall be 1' in depth, have a trapezoidal cross section with 2:1 or flatter side slopes and a 3' minimum bottom width. The channel shall be lined with 4" - 12" rip-rap or SHA Class I[5] to a depth of 18".
2. Filter cloth shall be installed under all rip-rap. Filter cloth shall be Geotextile Class C.
3. Entrance and exit sections shall be installed as shown on the detail section.
4. Rip-rap used for the lining may be recycled for permanent outlet protection if the basin is to be converted to a stormwater management facility.
5. Gabion Inflow Protection may be substituted for Rip-rap Inflow Protection.
6. Rip-rap should blend into existing ground.
7. Rip-rap Inflow Protection shall be used where the slope is between 4:1 and 10:1. For slopes flatter than 10:1 use Earth Dike or Temporary Swale.

---

[4] Refer to Table 27

[5] See Table 28

DETAIL 5 – RIP-RAP INFLOW PROTECTION

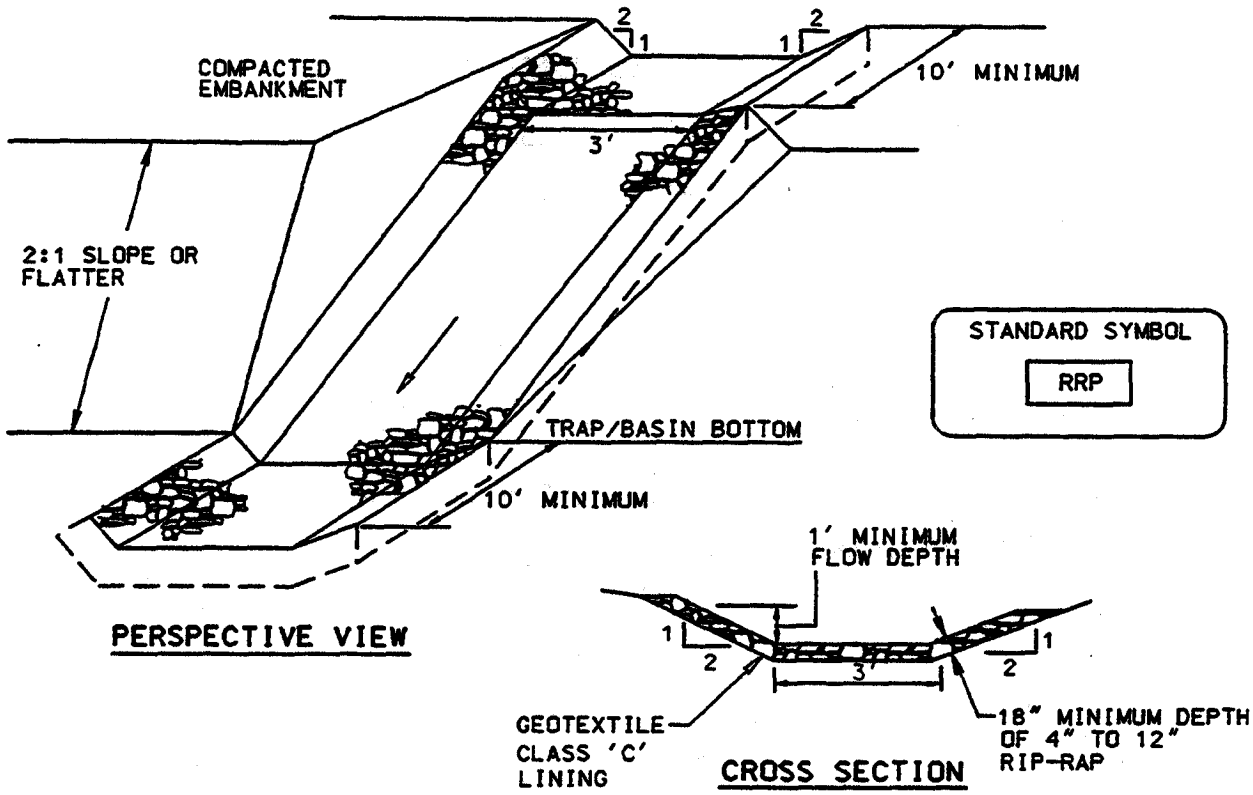

Construction Specifications

1. Rip-rap lined inflow channels shall be 1' in depth, have a trapezoidal cross section with 2:1 or flatter side slopes and 3' (min.) bottom width. The channel shall be lined with 4" to 12" rip- rap to a depth of 18".

2. Filter cloth shall be installed under all rip-rap. Filter cloth shall be Geotextile Class C.

3. Entrance and exit sections shall be installed as shown on the detail section.

4. Rip-rap used for the lining may be recycled for permanent outlet protection if the basin is to be converted to a stormwater management facility.

5. Gabion Inflow Protection may be used in lieu of Rip-rap Inflow Protection.

6. Rip-rap should blend into existing ground.

7. Rip-rap Inflow Protection shall be used where the slope is between 4:1 and 10:1. for slopes flatter than 10:1 use Earth Dike or Temporary Swale lining criteria.

7.0 STANDARDS AND SPECIFICATIONS

FOR

GABION INFLOW PROTECTION

Definition

A temporary or permanent, lined drainageway installed to convey concentrated runoff into sediment traps and basins or down steep slopes as applicable. Gabion Inflow Protection consists of the installation of wire baskets (Gabions) filled with rock or recycled concrete equivalent in a flow channel for stabilization.

Purpose

The purpose of Gabion Inflow Protection is to provide stable conveyance of concentrated runoff down steep slopes, (i.e. into temporary sediment traps and basins) thereby preventing erosion of the flow channel.

Conditions Where Practice Applies

Gabion Inflow Protection is required where the slope of a drainage way contributing to a sediment trap or basin, or other steep area as applicable, exceeds 4:1 (25%). Surface runoff may be directed to the inflow device by means of dikes or swales.

Design Criteria

Gabion Inflow Protection shall be 4"- 7" stone[6] (min.) placed within manufactured wire baskets, underlain with Geotextile Class C[7] and placed from the ditch overfall elevation to the bottom of the trap or basin when the inflow slope is between 2:1 and 4:1. Slopes flatter than 10:1 shall be stabilized in accordance with Temporary Swale or Earth Dike criteria as applicable. For slopes between 4:1 and 10:1, see Rip-rap Inflow Protection.

Construction Specifications

1. Gabion Inflow Protection shall be constructed by arranging 9'x 3'x 9" gabion baskets forming a trapezoidal cross section 1' deep with 2:1 side slopes and 3' bottom width.
2. Geotextile Class C shall be installed under all gabion baskets.
3. The stone used to fill the gabion baskets shall be 4" - 7".
4. Gabion shall be installed in accordance with manufacturer's recommendations.
5. Gabion Inflow Protection shall be used where concentrated flow is present on slopes steeper than 4:1.

---

[6] See Table 28

[7] Refer to Table 27

DETAIL 6 – GABION INFLOW PROTECTION

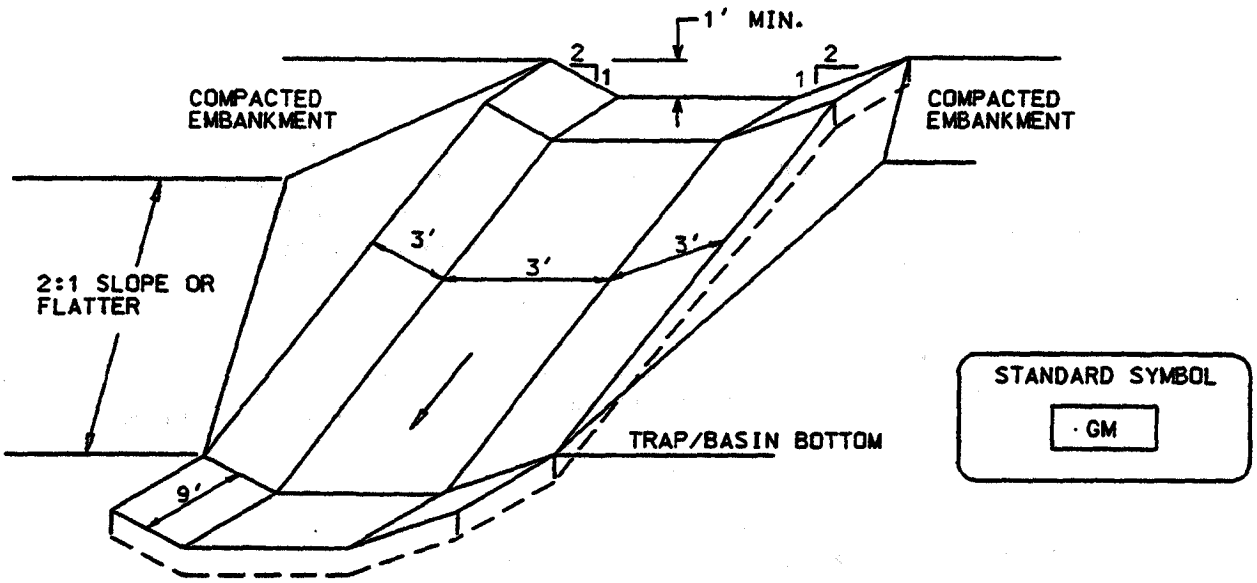

PERSPECTIVE VIEW

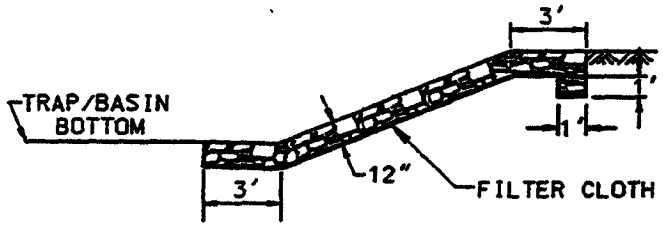

PROFILE ALONG CENTERLINE

Construction Specifications

1. Gabion inflow protection shall be constructed of 9' x 3' x 9" gabion baskets forming a trapezoidal cross section 1' deep, with 2:1 side slopes, and a 3' bottom width.
2. Geotextile Class C shall be installed under all gabion baskets.
3. The stone used to fill the gabion baskets shall be 4" - 7".
4. Gabions shall be installed in accordance with manufacturers recommendations.
5. Gabion Inflow Protection shall be used where concentrated flow is present on slopes steeper than 4:1.

8.0 STANDARDS AND SPECIFICATIONS

FOR

STONE CHECK DAMS

Description of Practice

Stone Check Dams are stone weirs placed in series in swales or ditches.

Purpose

Stone Check Dams are constructed to reduce runoff velocities to non-erosive rates and to prevent channel erosion in drainage courses.

Design Criteria

1. Stone check dams shall be located so as to provide maximum velocity reduction. This may be achieved by considering the volume of runoff, the drainage area and the slope. The check dams should be placed in reasonably straight ditch sections to minimize the potential for erosion in the channel bend. All stone check dams should be keyed into the sides and bottom of the channel. **This practice is not to be used as a sediment trapping device.** Sediment laden runoff must pass through a sediment trapping device prior to being discharged from the site.

2. The distance between the Stone Check Dams will vary with the longitudinal ditch slope. Stone Check Dams shall be constructed using 4"- 7" stone[8] or recycled concrete equivalent and shall be placed to form a weir. The outlet crest or the top of the stone weir shall be approximately 6" lower than the outer edges. The inside or upstream side of the weir shall be lined with a 1' thick layer of washed (3/4" to 1 1/2") crushed aggregate. Geotextile Class E[9] or better under the bottom and sides of the dam prior to placement of stone is optional.

3. The height of the stone outlet weir should not exceed one-half the depth of the ditch or swale. Additionally, the maximum height of the weir must not exceed 2.0 feet to prevent scour of the toe of the dam. If the check dam exceeds this, these provisions do not apply and an engineering analysis should be conducted. The stone check dam should be wide enough to reach from bank to bank of the ditch or swale with the weir section length in the center of the dam.

4. The number of check dams will depend on the length and slope of the ditch or swale.

---

[8] Refer to Table 28

[9] Refer to Table 27

5. The required spacing is determined as:

$$x = \frac{y}{S}$$

where:

x = Check dam spacing (ft)
y = Check dam height (ft)
S = Natural channel slope (ft/ft)

Figure 1 may be used to determine the check dam spacing. The spacing requirements do not change significantly with varying ditch cross sections, but are most sensitive to the channel slope and height of the check dam.

Construction Specifications

1. Swales and ditches shall be prepared in accordance with the construction specifications described in Section A-2, Standards and Specifications for Temporary Swale.
2. The check dam shall be constructed of 4" to 7" stone. The stone shall be placed so that it completely covers the width of the channel and keyed into the channel banks.
3. The top of the check dam shall be constructed so that the center is approximately 6 inches lower than the outer edges, forming a weir that water can flow across.
4. The maximum height of the check dam at the center shall not exceed 2'.
5. The upstream side of the check dam shall be lined with approximately 1' of 3/4" - 1½" aggregate.
6. Accumulated sediment shall be removed when it has built up to 1/2 of the original height of the weir crest.

Sediment Removal

While this practice is not intended to be used for sediment trapping, some sediment will accumulate behind the check dam. Check dams should be checked periodically and after each significant rainfall. Accumulated sediment should be removed when it has reached 1/2 of the original height of the weir crest.

Check Dam Removal

In temporary swales and channels, check dams should be removed and the ditch filled in when it is no longer needed. In permanent channel structures, check dams may be removed when a permanent lining can be installed. In the case of grass lined ditches, check dams may be removed when the grass has matured sufficiently to protect the swale or channel. The area beneath the check dams should be seeded and mulched immediately after they are removed.

DETAIL 7 – STONE CHECK DAM

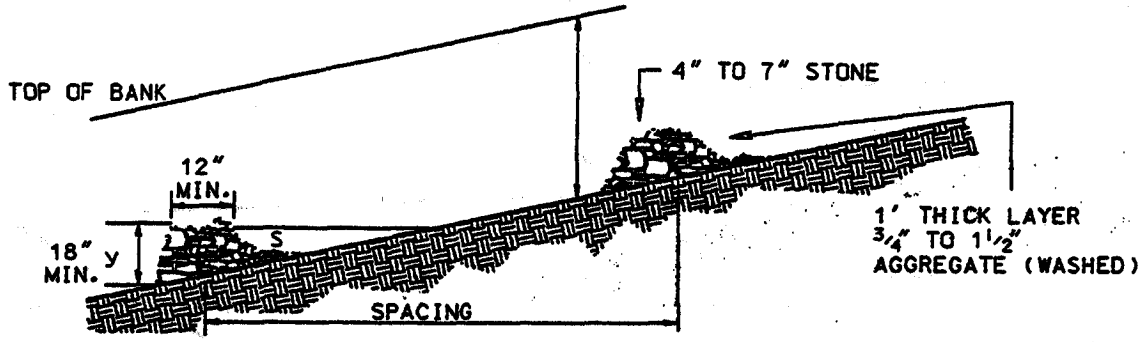

DITCH PROFILE

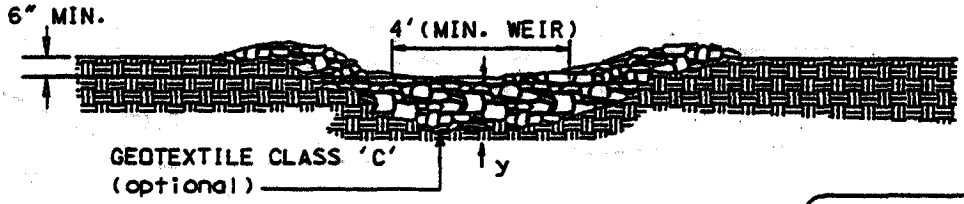

CROSS SECTION

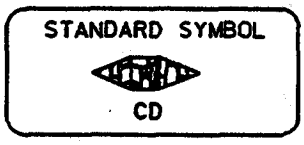

STANDARD STONE CHECK DAM DESIGN

SLOPE	SPACING
2% or less	80'
2.1% to 4%	40'
4.1% to 7%	25'
7.1% to 10%	15'
over 10%	use lined waterway design

Construction Specifications

1. Swales and ditches shall be prepared in accordance with the construction specifications described in Section A-2. Standards and Specifications for Temporary Swale.
2. The check dam shall be constructed of 4"-7" stone. The stone shall be placed so that it completely covers the width of the channel and is keyed into the channel banks.
3. The top of the check dam shall be constructed so the the center is approximately 6" lower than the outer edges. forming a weir that water can flow across.
4. The maximum height of the check dam at the center shall not exceed 2'.
5. The upstream side of the check dam shall be lined with approximately 1' of 3/4" to 1 1/2" aggregate.
6. Accumulated sediment shall be removed when it has built up to 1/2 of the original height of the weir crest.

FIGURE 1

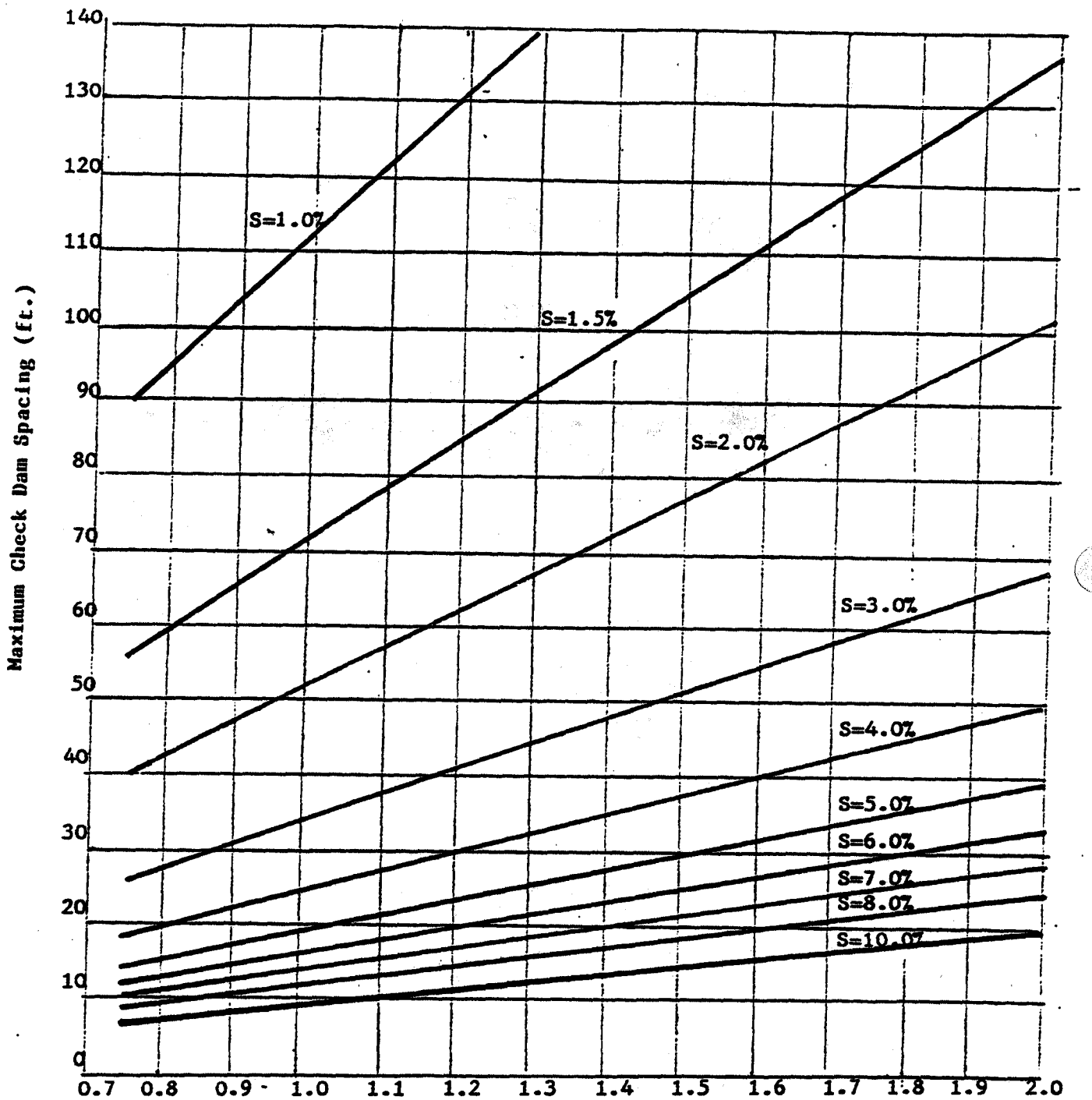

Design of Stone Check Dam Spacing

(n=0.030, Ve = 2.0 fps)