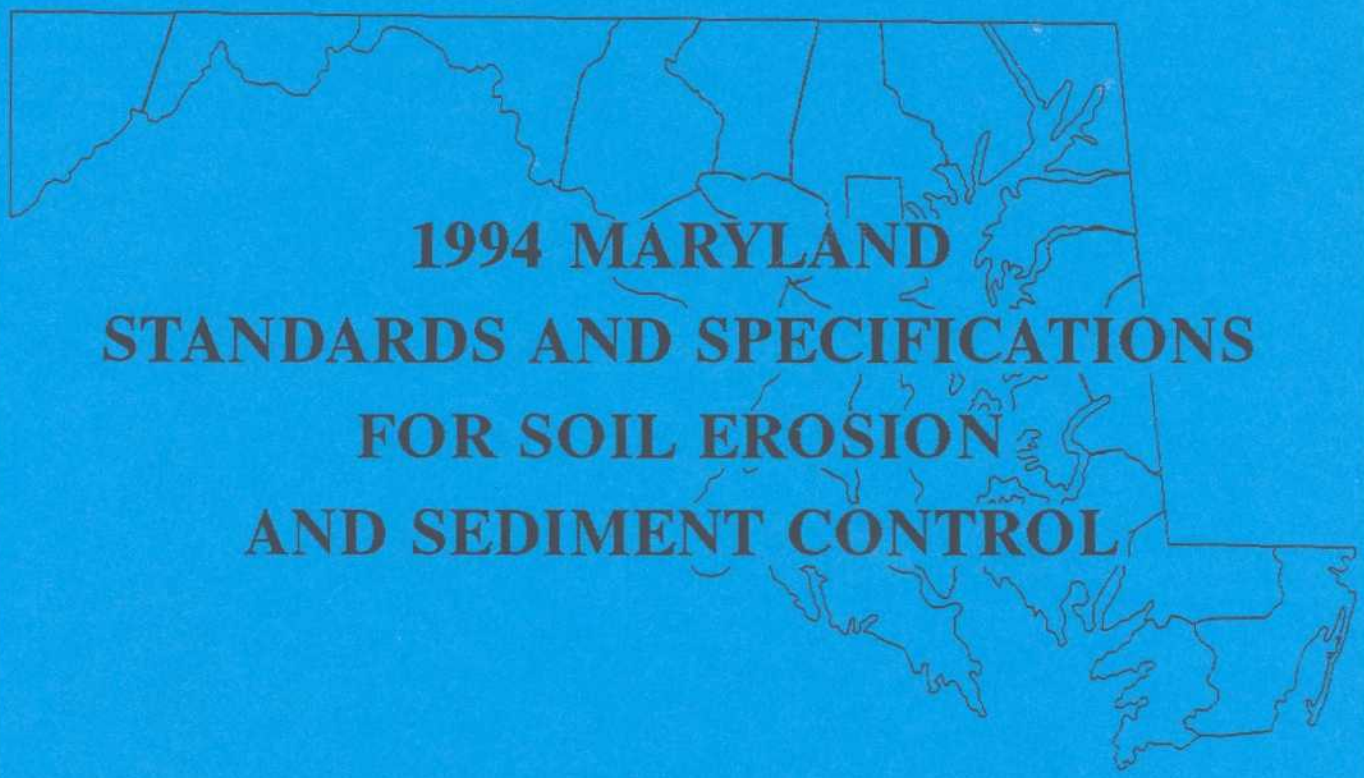

1994 MARYLAND STANDARDS AND SPECIFICATIONS FOR SOIL EROSION AND SEDIMENT CONTROL

MDE

MARYLAND DEPARTMENT OF THE ENVIRONMENT
Water Management Administration

in association with

SOIL CONSERVATION SERVICE
and
STATE SOIL CONSERVATION COMMITTEE

FOREWORD

At the outset, it is necessary to establish the fact that soil erosion and sediment control are only part of the overall management of stormwater during and after site development. As the original ground cover of a site is disturbed and removed, the runoff characteristics are modified. Velocities of flow are increased and the total runoff volume is also increased. Limited management of runoff during the construction phase is provided by sediment control practices. Runoff control after site development is accomplished by means of permanent stormwater management practices such as infiltration trenches or ponds. The practices contained in these standards and specifications are designed to provide a protective transition from initial site disturbance until implementation of permanent stabilization and stormwater management facilities. The practices described herein are minimum requirements. Local concerns may require practices that are more restrictive than these minimum standards.

SENSITIVE AREAS

Sensitive areas are defined in State law, regulation and/or County law and/or regulation and/or Municipality law and/or regulation. Sensitive watersheds are those streams, tributaries, riparian areas, and estuary areas that are part of the critical area, Class III and Class IV streams and tidal and non-tidal wetland areas and the adjacent steep slopes to any of these areas.

Designers and reviewers should be cognizant of the sensitive nature of these areas within the State of Maryland. Additional soil erosion and sediment control provisions and measures may be required to protect these areas to the greatest extent possible.

The level of additional soil erosion and sediment controls needed in these areas will be determined during the review for the project by the Planning Agencies, Soil Conservation Districts, Resource Agencies and Environmental Commissions and Boards. The final approval of these additional measures and practices will be the responsibility of the review and approval agency. Conflicts between recommendations made by Resource Agencies, Planning Agencies, Review Boards and approval agencies and Commissions will be resolved in writing.

The standards and specifications of this manual are the minimum requirements for soil erosion and sediment control. The provision of additional soil erosion and sediment control measures and practices needed in sensitive areas may be recommended by Planning Agencies, Resource Agencies, Review Committees and Commissions.

ACKNOWLEDGEMENTS

We would like to thank the following groups and individuals for their help in producing this document: the Soil Conservation Service Technical Committee, Maryland State Highway Administration, Metropolitan Washington Council of Governments, Dr. Barfield of the University of Kentucky, Mr. Mike Clar of Engineering Technology Associates, and everyone who submitted comments on the draft document including homebuilders, engineering consultants, and concerned citizens.

TABLE OF CONTENTS

Page

Forward II

Detail Drawings V

Figures VI

Tables VII

Standard Symbols VIII

Introduction IX

Section A - Water Handling

1.0 Earth Dikes A-1-1

2.0 Temporary Swales A-2-1

3.0 Dike/Swales A-3-1

4.0 Temporary Storm Drain Diversions A-4-1

Section B - Grade Stabilization Structures

5.0 Pipe Slope Drains B-5-1

6.0 Rip-rap Inflow Protection B-6-1

7.0 Gabion Inflow Protection B-7-1

8.0 Stone Check Dams B-8-1

Section C - Sediment Trapping Devices

9.0 Sediment Traps C-9-1

9.1 Pipe Outlet ST - I C-9-4

9.2 Stone Outlet ST - II C-9-8

9.3 Rip-rap Outlet ST - III C-9-11

9.4 Stone Outlet/Rip-rap Outlet ST - IV C-9-14

10.0 Sediment Basins C-10-1

11.0 Stone Outlet Structures C-11-1

Section D - Dewatering Practices

Dewatering Strategy D-12-1

12.0 Removable Pumping Stations D-12-3

13.0 Sump Pits D-13-1

14.0 Sediment Tanks D-14-1

Section E - Filtering Practices

15.0 Silt Fences E-15-1

16.0 Storm Drain Inlet Protection E-16-1

Section F - Land Grading and Structural Stabilization

17.0 Stabilized Construction Entrances F-17-1

18.0 Rock Outlet Protection F-18-1

19.0 Land Grading (Reverse Benches and Serrated Slopes) F-19-1

Section G - Vegetative Practices

20.0 Vegetative Stabilization G-20-1

21.0 Topsoiling G-21-1

22.0 Erosion Control Mattings G-22-1

23.0 Tree Protection G-23-1

Section H - Miscellaneous Practices

24.0 Materials Specifications H-24-1

25.0 Straw Bale Dikes H-25-1

26.0 Super Silt Fences H-26-1

27.0 Subsurface Drains H-27-1

28.0 Lined Waterways or Outlets H-28-1

29.0 Temporary Access Waterway Crossings H-29-1

30.0 Dust Control H-30-1

31.0 Glossary H-31-1

32.0 SCS Recommended Wetland Plants List H-32-1

DETAIL DRAWINGS

DETAIL #	PRACTICE	PAGE #
1.	Earth Dike	A-1-6
2.	Temporary Swale	A-2-4
3.	Perimeter Dike/Swale	A-3-3
4.	Pipe Slope Drain	B-5-4, 4A
5.	Rip-rap Inflow Protection	B-6-2
6.	Gabion Inflow Protection	B-7-2
7.	Stone Check Dam	B-8-3
8.	Pipe Outlet Sediment Trap ST-I	C-9-7, 7A
9.	Stone Outlet Sediment Trap ST-II	C-9-10, 10A
10.	Rip-rap Outlet Sediment Trap ST-III	C-9-13, 13A
10A.	Rip-rap/Stone Outlet Sediment Trap ST-IV	C-9-16, 16A
11.	Pipe Spillway Design	C-10-19
12.	Emergency Spillway	C-10-20
13.	Anti-seep Collar Design	C-10-23
14.	Typical Anti-seep Collars	C-10-24
15.	Riser Base Detail	C-10-25
16.	Trash Rack and Anti-Vortex Device	C-10-26, 26A
17.	Types of Couplers - Corrugated Metal Pipe	C-10-27
18.	Sediment Basin Baffles	C-10-28
	Sediment Basin Draw-down Schematic - Horizontal	C-10-29
	Sediment Basin Draw-down Schematic - Vertical	C-10-30
19.	Stone Outlet Structure	C-11-2
20A.	Removable Pumping Station	D-12-5
20B.	Sump Pit	D-13-2
21.	Portable Sediment Tank	D-14-2
22.	Silt Fence	E-15-3, 3A
23A.	Standard Inlet Protection (SIP)	E-16-5
23B.	At Grade Inlet Protection (AGIP)	E-16-5A
23C.	Curb Inlet Protection (CIP)	E-16-5B
23D.	Median Inlet Protection (MIP)	E-16-5C
24.	Stabilized Construction Entrance	F-17-3
25.	Rock Outlet Protection I	F-18-8, 8A
26.	Rock Outlet Protection II	F-18-9, 9A
27.	Rock Outlet Protection III	F-18-10, 10A
28.	Benched Slopes	F-19-3
29.	Serrated Slopes	F-19-3A
30.	Erosion Control Matting	G-22-2, 2A
31.	Tree Protection	G-23-3
32.	Straw Bale Dike	H-25-2, 2A
33.	Super Silt Fence	H-26-3, 3A
34.	Temporary Access Ford	H-29-6, 6A
35.	Temporary Access Bridge	H-29-9, 9A, 9B
36.	Temporary Access Culvert	H-29-12, 12A

FIGURES

FIGURE #	DESCRIPTION	PAGE
1.	Check Dam Spacing and Height	B-8-4
2.	Sediment Basin Design Data Sheet	C-10-10
3.	Incremental Stabilization - Cuts	G-20-6
4.	Incremental Stabilization - Fills	G-20-7
5.	U.S.D.A. Plant Hardiness Zones	G-20-17
6.	Subsurface Drain	H-27-5

TABLES

TABLE #	DESCRIPTION	PAGE
1.	Earth Dike Design Criteria	A-1-1
2.	Earth Dike Selection	A-1-5
3.	Temporary Swale Design Criteria	A-2-1
4.	Temporary Swale Selection (4' Bottom)	A-2-5
5.	Temporary Swale Selection (6' Bottom)	A-2-6
6.	Pipe Slope Drain Design Criteria	B-5-1
7.	Pipe Outlet Diameter Selection	C-9-4
8.	ST III and IV (Rip-Rap Channel) Outlet Design	C-9-12
9.	Sediment Trap Design Criteria ST-I, II, IV	C-9-17
10.	Sediment Trap Design Criteria ST-III	C-9-18
11.	Draw-down Device Orifice Area and Diameter	C-10-12
12.	Pipe Flow Chart (Corrugated Metal Pipe)	C-10-15
13.	Pipe Flow Chart (Concrete Pipe)	C-10-16
14.	Design Data for Earth Spillways	C-10-17
15.	Riser Inflow Curves	C-10-18
16.	Anti-Seep Collar Design	C-10-22
17.	Silt Fence Design Constraints	E-15-1
18.	SHA Rip-rap Size and Thickness	F-18-2
19.	Design of Outlet Protection - Minimum Tailwater Conditions	F-18-6
20.	Design of Outlet Protection - Maximum Tailwater Conditions	F-18-7
21.	Recommended Varieties of Grasses and Legumes	G-20-13
22.	Quality of Seed	G-20-14
23.	Grass and Legume Plant Characteristics	G-20-15
24.	Maintenance Fertilization	G-20-16
25.	Permanent Seeding for Low Maintenance Areas	G-20-18, 19
26.	Temporary Seeding	G-20-20
27.	Geotextile Fabrics	H-24-1
28.	Stone Size	H-24-2
29.	Straw Bale Dike Design Criteria	H-25-1
30.	Super Silt Fence Design Criteria	H-26-1
31.	Drain Chart - Corrugated Metal Pipe	H-27-6
32.	Drain Chart - Clay, Concrete, and Tile Pipe	H-27-7
33.	Drain Chart - Corrugated Plastic Tubing	H-27-8
34.	Determining "n" for Rip-rap Lined Channel	H-28-5

STANDARD SYMBOLS

EARTH DIKE	A-2 / B-3
SWALE	A-2 / B-3
PERIMETER DIKE/SWALE	PD/S-1
PIPE SLOPE DRAIN	PSD-12
ROCK OUTLET PROTECTION	
STONE CHECK DAM	CD
STONE OUTLET STRUCTURE	TSOS
SILT FENCE	SF — SF
SUPER SILT FENCE	SSF — SSF
STRAW BALE DIKE	SBD
STANDARD INLET PROTECTION	SIP
AT GRADE INLET PROTECTION	AGIP
CURB INLET PROTECTION	CIP
STANDARD INLET PROTECTION	MIP
GABION INFLOW PROTECTION	GM
RIP-RAP INFLOW PROTECTION	RRP
SUMP PIT	SP
STABILIZED CONSTRUCTION ENTRANCE	SCE
REMOVABLE PUMPING STATION	RPS

INTRODUCTION

PURPOSE

The purpose of these standards and specifications is to provide designers with a variety of measures to control sediment and stormwater related water quality problems that land development often creates. These standards are minimum criteria and must be incorporated into an overall approach for controlling runoff during construction. The successful implementation of control measures depends largely on the designer's ability to select a control strategy that is appropriate to the unique characteristics and problems posed by a specific site. The designer can make the selection and implementation of sediment and stormwater management measures considerably simpler and less costly by incorporating environmental planning methodologies into the start of the site plan development process.

PLANNING

Developing site plans begins with gathering, mapping, and analyzing information about the physical characteristics of the site. Designers must visit the proposed development site so that its topographic, vegetative, drainage and soil characteristics are clearly understood. Relying exclusively on topographic maps, soils maps, and other materials found in the office without field verification is not an acceptable planning technique.

The topography of the site, mapped at suitable contour intervals, will allow the identification of drainage patterns, slopes, and sensitive features. Mapping the flow of water onto, through, and off the site enables the delineation of drainage areas. Several interim drainage plans may be necessary to show changing drainage area boundaries as the site is graded. Concurrent phased plans will have to be developed to adjust the soil erosion and sediment controls to the changing drainage patterns. Investigating the site soil characteristics will identify areas suitable for infiltration as well as highly erodible areas, which should be left undisturbed if possible. Areas where vegetation is to be preserved, such as long or steep slopes, highly erodible soils, and buffer strips along water bodies, should be mapped. Downstream wetlands, lakes, streams, streets, or other areas particularly sensitive to damage from erosion and sedimentation should also be investigated and mapped. After the site's topographic, drainage, soils, and vegetative characteristics are mapped, a site development plan that minimizes environmental hazards can be developed.

Clearly, the most effective way to minimize the likelihood of sediment pollution is to minimize the opportunity for erosion to occur. The best way to reduce the amount of erosion that occurs is to reduce the amount of area that is exposed and the time that it is exposed. Stabilization of disturbed areas must occur as soon as work has stopped. To limit grading, plan to utilize the existing terrain by locating buildings and roads so that existing contours are followed as much as possible. Preserve natural vegetation wherever feasible. By reducing the need for grading in this fashion, the amount of erodible area, and the corresponding need for sediment control measures, is also reduced. Planning the site development so that grading is minimized facilitates the development of a soil erosion and sediment control plan that is appropriate and cost effective for the site.

SEDIMENT DAMAGE

Over four billion tons of sediment are estimated to reach the ponds, rivers and lakes of our country each year. Approximately 10 percent of this amount is contributed by erosion from land undergoing highway construction or urban land development. Roughly one billion tons of this sediment are actually carried all the way to the oceans.

Sediment yields in streams flowing from already urbanized drainage basins vary from approximately 200 to 500 tons per square mile per year. In contrast, areas undergoing urbanization often have sediment yields of from 1,000 to 100,000 tons. It is easy to comprehend the tremendous quantity of sediment reaching our streams and rivers annually since an estimated 3,000 to 4,000 acres of land in the U. S. are currently undergoing development for housing, industrial sites, and highway construction every day. For very small areas, where construction activities have drastically altered or destroyed vegetative cover and the soil mantle, sediment derived from one acre of land may exceed 20,000 to 40,000 times that obtained from an adjacent undeveloped farm or woodland in an equivalent period of time.

Deposition tends to occur as the velocity of sediment transporting streams decreases. Excessive quantities of sediment cause costly damage to water areas and to private and public lands. Obstruction of stream channels and navigable rivers by masses of deposited sediment reduces hydraulic capacity which, in turn, causes an increase in subsequent flooding and a consequent increase in flood damages - frequently with attendant personal injuries and deaths.

Sediment fills drainage channels, especially along highways and railroads, and plugs culverts and storm drainage systems thus necessitating frequent and costly maintenance. Municipal and industrial water supply reservoirs lose storage capacity, navigable channels must continually be dredged, and cost of filtering muddy water preparatory to domestic or industrial use becomes excessive and sometimes exorbitant. The added expenses of water purification in the United States amounts to millions of dollars each year.

The negative impact on aquatic organisms due to large influxes of sediment into waterways is substantial. The initial effect is a drastic reduction in the number and density of benthos. Aquatic vegetation is often destroyed, either by burial or reduction of sunlight essential for growth. Many species of fish, dependent on bottom organisms for food, or plant life for refuge, are threatened by the damaged habitat. The reduction of sunlight from suspended sediment impairs primary production (the process by which sunlight is utilized by certain organisms to produce carbon and oxygen) and may reduce oxygen levels in the water to a point where aquatic life cannot survive. The habitat destruction associated with rapid sedimentation severely impairs the ability of coastal environments to support commercially important finfish and shellfish populations. Migratory waterfowl also utilize nearshore plant and shellfish communities as a food source during their annual migration. The reduction of waterfowl in recent years has been associated, in part, with habitat destruction from sedimentation derived from development activity.

Erosion and subsequent sedimentation of waterways also impairs recreational areas. The aesthetics and the attraction of many streams, lakes and reservoirs used for swimming, boating, fishing and other water-related recreational activities maybe destroyed from excessive erosion and the resultant sedimentation.

FACTORS THAT INFLUENCE SOIL EROSION

When designing a development plan, the inherent erodibility of the proposed development site must be evaluated. The erosion potential of any area is determined by four principal factors: the erodibility of soil, vegetative cover, topography, and climate. Although the factors are interrelated as determinants of erosion potential, they are discussed separately for ease of understanding.

SOIL ERODIBILITY

The vulnerability of a soil to erosion is known as erodibility. Soil erodibility is influenced by average particle size and gradation (texture), percentage of organic matter, and soil structure. The most erodible soils generally contain high proportions of silt and very fine sand. The presence of clay or organic matter tends to decrease soil erodibility. Clays are sticky and tend to bind soil particles together, which along with organic matter helps to maintain stable soil structure (aggregates).

VEGETATIVE COVER

There are several ways in which vegetation protects soil from erosive forces of raindrop impact and runoff scour. Vegetation (top growth) shields the soil surface from raindrop impact while the root mass holds soil particles in place. Vegetation also can "filter" sediment from runoff. Thus grass "buffer strips" can be used to remove sediment from the surface runoff. Vegetation also slows the velocity of runoff and helps maintain the infiltration capacity of a soil. Maintenance and establishment of vegetation is the most important factor in combatting erosion. The goal is to expose as small an area as possible for the shortest length of time. By minimizing the time and extent of soil exposure, the erosion hazard is also minimized.

TOPOGRAPHY

Slope length and steepness are key influences on both the volume and velocity of surface runoff. Longer slopes deliver more runoff to the base of slopes and steeper slopes increase runoff velocity; both conditions enhance the potential for erosion to occur.

CLIMATE

Erosion potential is also affected by the climate of an area. Rainfall characteristics (e.g. frequency, intensity, and duration) directly influence the amount of runoff that is generated. As the frequency of rainfall increases, water has less chance between storms to drain through the soil. The soil will remain saturated for longer periods of time and stormwater runoff volume will be greater. Therefore, where rainfall events are frequent, intense, or lengthy, erosion risks are high. Seasonal variation in temperature and rainfall defines periods of high erosion potential during the year. Snow will not cause erosion as it falls, but when rapid melts occur, erosion may result.

SOIL LOSS RATES

Raindrop size, intensity of rainstorms, and amount of rainfall affect soil loss rates. Note that May through September is the period of the year when high soil loss rates are most likely to occur in Maryland. Soil erosion and sedimentation can occur when soil, vegetative, topographic, and climatic factors are not considered during the planning stage of development. Areas slated for development that are deemed environmentally sensitive (e.g., those with high soil erosion potential and/or proximity to surface water) demand added attention to proposed clearing and grading activity, soil erosion and sediment control requirements and final site stabilization. Aside from concern for potential sediment erosion, other environmental concerns exist when a site is being planned for development. These include:

1. Extensive denudation exposes underlying soils to rain and runoff.

2. Exposure of underlying soil or geologic formations less pervious and/or more erodible than original soil surface.

3. Prolonged exposure of unprotected and disturbed soils due to scheduling problems and/or delayed construction (phasing problems) may cause additional erosion.

4. The placement of impervious surfaces will reduce rain infiltration and groundwater recharge. This may affect slope stability and survival of existing and/or newly established vegetation.

5. Creation of exposures facing south and west may hinder plant growth due to adverse temperature and moisture conditions; and

6. Exposure of subsurface soils that are rocky, acidic, draughty, or poorly draining may hinder vegetative establishment.

STORMWATER RUNOFF

Whenever the land use of a watershed changes, the runoff characteristics will also change. Going from a forest to a developed condition will increase the amount of runoff coming from the land. This increase is the result of:

1.Reduced capacity of exposed soils to absorb rainfall due to compaction caused by heavy equipment may increase runoff volumes.

2.Grading operations and the placement of structures (streets, building, etc.) may enlarge existing drainage areas or concentrate surface flows with resultant increases in runoff volume and velocity.

3.Increased impervious surfaces associated with the construction of streets, building, sidewalks and paved driveways and parking lots will increase stormwater discharge by reducing on-site infiltration of rain.

BASIC PRINCIPLES OF SOIL EROSION AND SEDIMENT CONTROL

PLAN THE DEVELOPMENT TO FIT THE SITE.

Areas of high erosion potential should be left undisturbed whenever possible. Specific characteristics that could limit a site's development potential include highly erodible or acid soils, temperature extremes that inhibit vegetative stabilization, steep slopes and proximity to surface waters. For instance, some areas, such as floodplains and wetlands, should not be developed at all. Floodplains are nearly level areas adjacent to stream channels that temporarily store excess runoff. Functioning in this way, floodplains help avoid erosion and flooding in downstream areas. Ideally, these areas should be preserved in their natural state as open space or recreational areas.

EXPOSE THE SMALLEST PRACTICAL AREA OF LAND FOR THE SHORTEST POSSIBLE TIME.

When soil disturbances occur and the natural vegetation is removed, the extent and duration of exposure should be minimized. Plan the phases or stages of development so that only the areas which are actively being developed are exposed. All other areas should have a good cover of temporary or permanent vegetation or mulch. Grading should be completed as soon as possible after it is initiated. As cut slopes are made, and as fill slopes are brought up to grade, these areas should be revegetated as the work progresses. This is known as staged seeding.

APPLY EROSION CONTROL AS A FIRST LINE OF DEFENSE AGAINST ON-SITE DAMAGE.

Implementing practices that prevent or minimize erosion on a construction site is called "erosion control". "Erosion control" strategies attempt to prevent or minimize the problem of erosion on developing sites. The following guidelines apply to "erosion control" strategies:

1. Clear only what is required for construction; where possible, large projects should be cleared and graded as construction progresses; mass clearing and grading should be avoided;

2. Reestablish with vegetation as-soon-as possible after construction is completed; certain sections of large construction projects may be completed before others and be ready for stabilization before the total project is completed; waiting until the end of the project to commence all site stabilization may leave areas exposed for unnecessarily long durations;

3. Areas that have been cleared and graded, but will not be constructed on for more than 14 days (7 days for steep slopes) must be stabilized with mulch or temporary vegetation;

4. Extraneous runoff should be diverted from critical areas such as highly erodible soils and steep slopes and conveyed to stable areas; and

5. The formation of large drainage areas and the concentrating of surface runoff flow patterns should be avoided where possible.

USE SEDIMENT CONTROL PRACTICES AS PERIMETER PROTECTION TO PREVENT OFF-SITE DAMAGE.

Controls placed along the perimeter of the site to collect eroded sediments must be implemented. Diversion ditches, sediment traps, vegetative filters and sediment basins are examples of practices to control sediment. These sediment controls should be in place before clearing and grading operations begin. Generally, sediment can be retained by two methods: (a) filtering runoff as it flows through a vegetated area and (b) impounding the sediment laden runoff for a period of time so that the soil particles settle out. The best way to control sediment, however, it so prevent erosion as discussed in the third principle.

IMPLEMENT A THROUGH MAINTENANCE AND FOLLOW-UP OPERATION.

This fifth principle is vital to the success of the four other principles. A site must have thorough periodic maintenance checks of soil erosion and sediment control practices. Control practices must be maintained just as construction equipment must be maintained. An example of applying this principle would be to start a routine "end of day check" to make sure that all control practices are working properly. Also, all controls should be inspected for needed maintenance after rainfall events.

DEVELOPING THE SOIL EROSION AND SEDIMENT CONTROL PLAN

The basic principles of soil erosion and sediment control should be considered in conjunction with the environmental concerns for the proposed development site when formulating the Grading and Sediment Control Plan.

PLANNING PROCEDURES

1. Determine limits of clearing and grading. Decide exactly which areas must be disturbed in order to accommodate the proposed construction. Pay special attention to critical areas which must be disturbed. Staged clearing and grading (as an alternative to massive clearing and grading) should be considered where feasible.

2. Divide the site into natural drainage areas. Determine how runoff will travel over the site. Consider how soil erosion and sedimentation can be controlled in each small drainage area before looking at the entire site. Remember, it is advantageous to control soil erosion (prevent the problem) rather than retrofit perimeter controls to collect the end result of the problem (sediment). Maximum drainage areas to sediment controls must be clearly delineated.

3. Select soil erosion and sediment control practices. Soil erosion and sediment control practices can be divided into 3 categories: vegetative controls, structural controls, and site management. This handbook should be used for the selection and design of vegetative and structural practices. Management measures are construction management techniques and decisions which, if made with consideration of the potential erosion problems on a site, can minimize the need for designed controls.

4. Vegetative Controls - The first line of defense against off-site sediment damage is to prevent soil erosion. This is accomplished by protecting the soil surface from raindrop impact and overland flow of runoff. The best way to protect the soil surface is to preserve the existing vegetative groundcover. Where land disturbance is necessary, temporary seeding or mulching must be used on areas which will be exposed for longer than 14 days (7 days for steep slopes).

Permanent stabilization should be performed as soon as possible after the graded area is completed. Soil erosion and sediment control plans must contain provisions for permanent stabilization of disturbed areas. Seed type, soil amendments, seedbed preparation, and mulching should be described on the plans. Selection of permanent vegetation should include the following considerations:

a. establishment requirements;
b. adaptability to site conditions;
c. aesthetic and natural resource values; and
d. maintenance requirements.

5. Structural controls - Structural practices are usually required since not all disturbed areas can be promptly protected with vegetation. They are often used as a second or third line of defense to capture sediment before it leaves the site. It is very important that structural practices be selected to provide the optimum sediment control strategy and be designed and constructed according to the standards and specifications.

6. Management Measures - Good construction management is as important as physical practices for soil erosion and sediment control, and there is generally little or no cost involved. The following are some management considerations which can be employed:

a. Sequence construction so that no area remains exposed for more than 14 days (7 days for steep slopes) without stabilization.

b. Temporary or permanent seeding should be done immediately after grading.

c. On large projects, stage the construction so that one area can be stabilized before another is disturbed.

d. Develop and carry out a regular maintenance schedule for soil erosion and sediment control practices.

e. Physically mark off limits of land disturbance on the site with tape, signs or other methods, so the workers can see areas to be protected.

f. Make sure that all workers understand the major provisions of the soil erosion and sediment control plan.

g. Responsibility should be designated to one individual (Responsible Personnel) who has been certified in soil erosion and sediment control.

SOIL EROSION AND SEDIMENT CONTROL PLAN CONTENT

The soil erosion and sediment control strategy that is formulated by development planners is conveyed to the contractors through the soil erosion and sediment control plan. All plans must be easy to read and interpret if they are to be implemented correctly. To help clarify and simplify the plans, standard symbols and uniform scales have been developed. Standard symbols are used to facilitate the understanding and review of plans. They should be bold and easily discernible on the plans.

SCALE

The following scales are recommended for use on soil erosion and sediment control plans because they facilitate the plan review process: 1" = 20', 1" = 30', 1" = 40', 1" = 50'. Minimum scale will be established by plan review agency. The contour interval for these plans shall be two feet or less. Other scales or contour intervals may be favored for special types of land disturbance projects. For example, strip mine plans are often drawn to scales of 1" = 200' or 1" = 500' with contour intervals of 5 to 20 feet. Consult the appropriate plan review agency prior to finalizing the selection of plan scale.

SOURCES OF ASSISTANCE

Property owners seeking technical advice on soil erosion sediment control problems should contact officials of the Soil Conservation District in which they reside. The Department of the Environment's Water Management Administration (WMA), local county and municipal governments can all provide assistance to property owners.

AVAILABLE INFORMATION

Contact WMA for a Publication List that includes the State Sediment Control Law, The Code of Maryland Regulations, and many other useful soil erosion sediment control and stormwater management publications.

REVISING THE STANDARDS AND SPECIFICATIONS

The Standards and Specifications establish a minimum performance criteria that should be met by all techniques and devices used for erosion and sediment control in Maryland. On occasion, variations or other Standards or Specifications may be found to function better or be more desirable for erosion and sediment control by plan approval authorities. If after several tests the approval authority decides it would like to utilize this revised Standard or Specification on a regular basis, it needs to prepare a Standard and the accompanying Specifications with a cover letter to be submitted to the Maryland Department of the Environment, Water Management Administration.

The revised Standard and Specification will be reviewed by a subcommittee consisting of SCS, SCD, and MDE technical personnel to review the revised or new Standard and Specification. When the revised Standard and Specification is approved by the technical subcommittee, an approval authorization, from the Director of the Water Management Administration and the technical representative of the local approval authority will be entered on the standard. Once the revised or new Standard and Specification has received approval it can be used on a regular basis within that jurisdiction. If other jurisdictions desire to utilize the same or a similar Standard and Specification then they must seek approval from the technical subcommittee. We do not anticipate a great amount of deviation from these Standards and Specifications, but when better erosion and sediment control can be achieved, revised Standards and Specifications will generally be looked upon favorably.

Section A - WATER HANDLING

1.0 STANDARDS AND SPECIFICATIONS

FOR

EARTH DIKES

Definition

A temporary berm or ridge of soil, compacted, stabilized and located in such a manner as to direct water to a desired location.

Purpose

The purpose of the earth dike is to direct runoff to a sediment trapping device which reduces the potential for erosion and sedimentation. Earth dikes can also be used for diverting clean water away from disturbed areas.

Conditions Where Practice Applies

Earth dikes are often constructed across disturbed areas and around construction sites such as parking lots and subdivisions. The dikes shall remain in place until the disturbed areas are permanently stabilized.

Earth Dikes are constructed:

1. To divert sediment laden runoff from a disturbed area to a sediment trapping device.

2. Across disturbed areas to shorten overland flow distances.

3. To direct sediment laden water along the base of slopes to a trapping device.

4. To divert clear water from an undisturbed area to a stabilized outlet. Runoff shall be discharged at non-erosive rates.

Table 1 Design Criteria

	Dike A	Dike B
Drainage Area	(See Table 2)	(See Table 2)
Slope (of dike)	(See Table 2)	(See Table 2)
Dike Height (a)	18 in.	30 in.
Dike Width (b)	24 in.	36 in.
Flow Width (c)	4 ft.	6 ft.
Flow Depth in Channel (d)	12 in.	24 in.
Side Slopes	2 : 1.or flatter	2 : 1 or flatter

Note: **1. For slopes or drainage areas other than specified on Table 2, an engineering design is required. If the slope of the earth dike or the drainage area contributing to the dike falls between values on Table 2, round up to the next higher slope or drainage area.**

2. Stabilization of the earth dike shall be completed within seven days of installation.

Construction Specifications

1. All temporary earth dikes shall have uninterrupted positive grade to an outlet. Earth dikes having longitudinal slopes flatter than 1% should have spot elevations along the flow line.

2. Diverted runoff from disturbed areas shall be directed to a sediment trapping devices.

3. Diverted runoff from undisturbed areas shall outlet directly onto an undisturbed, stabilized area at a non-erosive velocity ($\leq$ 4 fps for grass).

4. All trees, brush, stumps, and obstructions shall be removed and disposed of so as not to interfere with the proper functioning of the earth dike berm and flow channel.

5. The dike shall be excavated or shaped to line, grade and cross section as required to meet the criteria specified herein and be free of bank projections or other irregularities which will impede normal flow.

6. Fill shall be compacted by earth moving equipment.

7. All earth removed and not needed for construction shall be placed so that it will not interfere with the functioning of the earth dike berm and flow channel.

8. Inspection and maintenance must be provided periodically and after each rain event.

Stabilization

Stabilization of the earth dike shall be completed within 7 days of installation in accordance with the standards and specifications for Vegetative Practices (Section G). The earth dike flow channel shall be stabilized in accordance with Table 2, and the following criteria:

Flow Channel Stabilization

1. Seed and cover with straw mulch.

2. Seed and cover with Erosion Control Matting or line with sod.

3. 4" - 7" stone or recycled concrete equivalent pressed into the soil in a minimum 7" layer.

The earth dike type (A or B) and lining (1, 2, or 3) shall be shown on the plans using the standard symbol and A-1, or B-3, etc. Earth dike type and lining may vary along its length.

In highly erodible soils, as defined by the local approval agency, refer to the next higher slope grade for the type of stabilization needed.

Engineering Design Criteria

Engineering design may preempt the use of Table 2. The basis for the engineering design shall be the 2-year frequency storm using SCS criteria, assuming the worst soil cover conditions to prevail in the contributing drainage area over the life of the earth dike. Manning's Equation shall be used to determine earth dike flow channel velocities associated with the developed discharges. The Manning's Roughness coefficients to be used in the equation are 0.025 for seed and mulch, 0.03 for soil stabilization matting or sod, and for 4"- 7" stone use 0.045 for flow depths up to 1 foot (Dike A) and 0.038 for flow depths between 1 and 2 feet (Dike B). The allowable flow channel velocities shall be < 4 fps for Seed and Mulch, < 6 fps for Stabilization Matting or sod, and < 8 fps for 4"- 7" stone.

Outlet

1. Earth dikes must have an outlet that functions without causing erosion.

2. Runoff from disturbed areas shall be conveyed to a sediment trapping device such as a sediment trap or sediment basin until the drainage area above the earth dike is adequately stabilized.

3. The on-site location may need to be adjusted to meet field conditions.

4. Clear water diversions around disturbed areas shall be discharged into an undisturbed, stabilized area or watercourse at a non erosive velocity.

Removal

Following completion of all construction and stabilization at a site with established vegetation, all temporary earth dikes shall be removed and the areas occupied by the dikes shall be graded and stabilized with vegetation.

Directions for Using Table 2

1. Determine the location on the Erosion and Sediment Control plan where using the earth dike to divert runoff is feasible. Determine the longitudinal slopes of the proposed temporary earth dike location.

2. Determine the maximum drainage area to various design points along the proposed earth dike alignment.

3. Enter Table 2 with the slope and drainage corresponding to the previously determined design points along the earth dike. Using Table 2 choose an earth dike type (A or B) and lining (1, 2, or 3) for the earth dike alignment between the design points.

4. Review the slopes along the earth dike alignment between the design points to insure that the slope/drainage area relationship does not exceed the chosen lining.

Table 2: Earth Dike Selection

	Drainage Area (acres)									
Slope % **	1	2	3	4	5	6	7	8	9	10
1	SEED	AND	4							
2	MULCH	4		SEED	AND	SOIL	STABILIZATION			
3				MATTING				6	6	6
4	4*						6			
5					6	6				
6				6		4" – 7"		STONE	PRESSED	
7			6			7" (Min)		INTO	GROUND	
8										
9										
10		6								

"B" Dike

"A" Dike

*Velocity of discharge in feet/second

** For slopes steeper than 10% refer to Section B - Grade Stabilization Structures

DETAIL 1 - EARTH DIKE

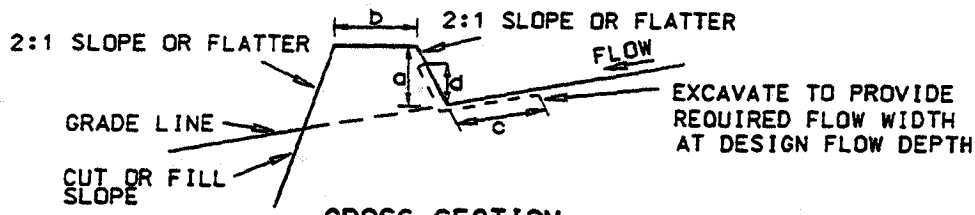

CROSS SECTION

	DIKE A	DIKE B
a-DIKE HEIGHT	18"	30"
b-DIKE WIDTH	24"	36"
c-FLOW WIDTH	4'	6'
d-FLOW DEPTH	12"	24"

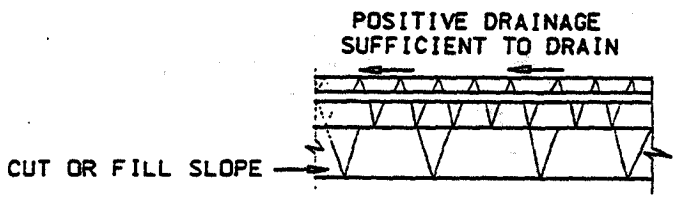

PLAN VIEW

STANDARD SYMBOL
A-2 B-3

FLOW CHANNEL STABILIZATION
GRADE 0.5% MIN. 10% MAX.

1. Seed and cover with straw mulch.
2. Seed and cover with Erosion Control Matting or line with sod.
3. 4" - 7" stone or recycled concrete equivalent pressed into the soil 7" minimum

Construction Specifications

1. All temporary earth dikes shall have uninterrupted positive grade to an outlet. Spot elevations may be necessary for grades less than 1%.

2. Runoff diverted from a disturbed area shall be conveyed to a sediment trapping device.

3. Runoff diverted from an undisturbed area shall outlet directly into an undisturbed, stabilized area at a non-erosive velocity.

4. All trees, brush, stumps, obstructions, and other objectional material shall be removed and disposed of so as not to interfere with the proper functioning of the dike.

5. The dike shall be excavated or shaped to line, grade and cross section as required to meet the criteria specified herein and be free of bank projections or other irregularities which will impede normal flow.

6. Fill shall be compacted by earth moving equipment.

7. All earth removed and not needed for construction shall be placed so that it will not interfere with the functioning of the dike.

8. Inspection and maintenance must be provided periodically and after each rain event.

2.0 STANDARDS AND SPECIFICATIONS

FOR

TEMPORARY SWALES

Definition

A temporary, excavated drainage way constructed and located to convey runoff to a desired location.

Purpose

The purpose of a temporary swale is to prevent runoff from entering disturbed areas by intercepting and diverting it to a stabilized outlet or to intercept sediment laden water and divert it to a sediment trapping device.

Conditions Where Practice Applies

Temporary Swales are constructed:

1. To divert sediment laden runoff from a disturbed area to a sediment trapping device.

2. Across disturbed areas to shorten overland flow distances.

3. To direct sediment laden water along the base of slopes to a trapping device.

4. To divert clear water from an undisturbed area to a stabilized outlet. Runoff shall be discharged at non-erosive rates.

Table 3 Temporary Swale Design Criteria

	Swale A	Swale B
Drainage Area	(see Table 4)	(see Table 5)
Slope of swale	(see Table 4)	(see Table 5)
Bottom Width of Flow Channel	4'min.	6'min.
Depth of Flow Channel	1'min.	1'min.
Side Slopes	2:1 or flatter	2:1 or flatter

Note: **1. For slopes or drainage areas other than specified on Table 4 or 5, an engineering design is required. If the slope of the swale or the drainage area contributing to the swale falls between values on Table 4 or 5, round up to the next higher slope or drainage area.**

2. Stabilization of the swale shall be completed within seven days of installation.

Construction Specifications

1. All temporary swales shall have uninterrupted positive grade to an outlet. Swales having longitudinal slopes flatter than 1% should have spot elevations along the flow line.

2. Runoff diverted from a disturbed area shall be conveyed to a sediment trapping device.

3. Runoff diverted from an undisturbed area shall outlet directly into an undisturbed stabilized area at a non-erosive velocity ($\leq$ 4 fps for grass).

4. All trees, brush, stumps, obstructions, and other objectional material shall be removed and disposed of so as not to interfere with the proper functioning of the swale flow channel.

5. The swale shall be excavated or shaped to line, grade and cross section as required to meet the criteria specified herein and be free of bank projections or other irregularities which will impede normal flow.

6. Fill, if necessary, shall be compacted by earth moving equipment.

7. All earth removed and not needed on construction shall be placed so that it will not interfere with the functioning of the swale flow channel.

8. Inspection and maintenance must be provided periodically and after each rain event.

Stabilization

Stabilization of the temporary swale shall be completed within 7 days of installation in accordance with the standards and specifications for Vegetative Practices (Section G). The temporary swale flow channel shall be stabilized in accordance with Table 4 or 5, and the following criteria:

Flow Channel Stabilization

1. Seed and cover with straw mulch.

2. Seed and cover with Erosion Control Matting or line with sod.

3. 4"- 7" stone or recycled concrete equivalent pressed into the soil in a minimum 7" layer.

The temporary swale type (A or B) and lining (1, 2, or 3) shall be shown on the plans using the standard symbol and A-1, or B-3, etc. Temporary Swale type and lining may vary along its length.

In highly erodible soils, as defined by the local approval agency, refer to the next higher slope grade for the type of stabilization needed.

Engineering Design Criteria

Engineering design may preempt the use of Table 4 or 5. The basis for the engineering design shall be the 2-year frequency storm using SCS criteria, assuming the worst soil cover conditions to prevail in the contributing drainage area over the life of the temporary swale. Manning's Equation shall be used to determine temporary swale flow channel velocities associated with the developed discharges. The Manning's Roughness coefficients to be used in the equation are 0.025 for seed and mulch, 0.03 for soil stabilization matting or sod, and for 4"- 7" stone use 0.045 for flow depths up to 1 foot. The allowable flow channel velocities shall be < 4 fps for Seed and Mulch, < 6 fps for Stabilization Matting or sod, and < 8 fps for 4"- 7" stone. For site conditions exceeding those where Temporary Swale criteria apply, refer to 28.0 Lined Waterway or Outlet.

Outlet

1. Temporary swales must have an outlet that functions without causing erosion.

2. Runoff from disturbed areas shall be conveyed to a sediment trapping device such as a sediment trap or sediment basin until the drainage area above the swale is adequately stabilized.

3. The location may need to be adjusted to meet field conditions.

4. Clear water diversions around disturbed areas shall be discharged onto an undisturbed, stabilized area or watercourse at a non erosive velocity.

Removal

Following completion of all construction and stabilization at a site with established vegetation, all temporary earth swales shall be removed and the areas occupied by the swales shall be graded and stabilized with vegetation.

DETAIL 2 - TEMPORARY SWALE

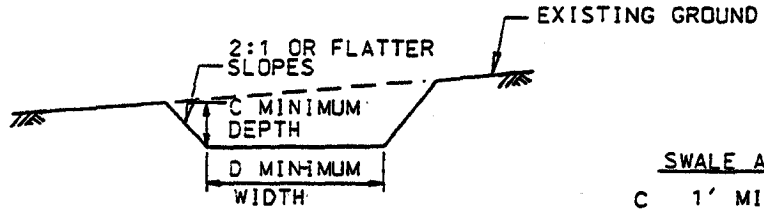

CROSS SECTION

	SWALE A	SWALE B
C	1' MIN.	1' MIN.
D	4' MIN.	6' MIN.

OUTLET AS REQUIRED

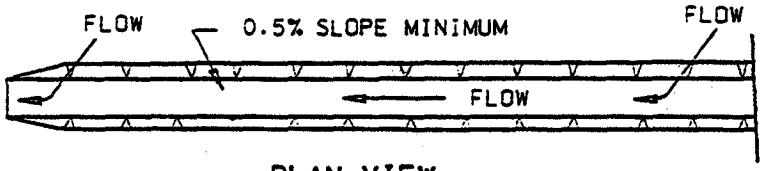

PLAN VIEW

DRAINAGE AREA = 10 ac (MAX)
SLOPE = 10% (MAX)

STANDARD SYMBOL
A - 2 / B - 3

FLOW CHANNEL STABILIZATION
GRADE 0.5% MIN. 10% MAX.

1. Seed and cover with straw mulch.
2. Seed and cover with Erosion Control Matting or line with sod.
3. 4"-7" stone or recycled concrete equivalent pressed into soil in a minimum 7" layer.

Construction Specifications

1. All temporary swales shall have uninterrupted positive grade to an outlet. Spot elevations may be necessary for grades less than 1%.

2. Runoff diverted from a disturbed area shall be conveyed to a sediment trapping device.

3. Runoff diverted from an undisturbed area shall outlet directly into an undisturbed stabilized area at a non-erosive velocity.

4. All trees, brush, stumps, obstructions, and other objectional material shall be removed and disposed of so as not to interfere with the proper functioning of the swale.

5. The swale shall be excavated or shaped to line, grade and cross section as required to meet the criteria specified herein and be free of bank projections or other irregularities which will impede normal flow.

6. Fill, if necessary, shall be compacted by earth moving equipment.

7. All earth removed and not needed for construction shall be placed so that it will not interfere with the functioning of the swale.

8. Inspection and maintenance must be provided periodically and after each rain event.

Table 4 Temporary Swale Selection

4' Flat Bottom

Slope %	Drainage Area (acres)									
	1	2	3	4	5	6	7	8	9	10
1	SEED	AND				4				
2	MULCH		4	4	4					
3		4		SEED	AND	SOIL	STABILIZATION		6	6
4					MATTING			6		
5	4*						6			
6						6				
7					6		4" – 7" STONE		PRESSED	
8				6			7" (Min.) INTO		GROUND	
9										
10			6							

*Velocity of flow in feet/second

Table 5 Temporary Swale Selection

6' Flat Bottom

Slope %	Drainage Area (acres)									
	1	2	3	4	5	6	7	8	9	10
1	SEED	AND				4				
2	MULCH		4	4	4					
3		4		SEED	AND	SOIL	STABILIZATION		6	6
4					MATTING			6		
5	4*						6			
6						6				
7					6		4" –7" STONE PRESSED			
8							7" (Min.) INTO GROUND			
9										
10				6						

*Velocity of flow in feet/second

3.0 STANDARDS AND SPECIFICATIONS

FOR

DIKE/SWALE

Definition

A temporary ridge of soil excavated from an adjoining swale located along the perimeter of the site or disturbed area.

Purpose

The purpose of a perimeter dike/swale is to prevent storm runoff from entering a disturbed area and to prevent sediment laden storm runoff from leaving the construction site or disturbed area.

Conditions Where Practice Applies

A perimeter dike/swale is constructed to divert flows around disturbed areas, or along tops of slopes to prevent flows from eroding the slope, or along the base of slopes to direct sediment laden flows to a trapping device. The perimeter dike/swale shall remain in place until the disturbed areas are permanently stabilized.

Design Criteria

An engineering design is not required for perimeter dike/swale. The following criteria shall be used:

Drainage area - Less than 2 acres (for drainage areas larger than 2 acres see Earth Dike or Temporary Swale).

Height - 12 inches minimum from bottom of swale to top of dike evenly divided between dike height and swale depth. Bottom width of dike - 3 feet minimum. Width of swale - 3 feet minimum (see standard drawing).

Grade - Dependent upon topography, but shall have positive drainage (sufficient grade to drain) to an adequate outlet. **Maximum allowable grade not to exceed 10 percent.**

Stabilization - The disturbed area of the dike and swale shall be stabilized within 7 days of installation, in accordance with the following:

PD/S Type	Drainage Area	Stabilization
PD/S - 1	1 acre or less	Seed and Mulch
PD/S - 2	1-2 acres	Seed and cover with erosion control matting or line with sod

Construction Specifications

1. All perimeter dike/swales shall have an uninterrupted positive grade to an outlet. Spot elevations may be necessary for grades less than 1%.

2. Runoff diverted from a disturbed area shall be conveyed to a sediment trapping device.

3. Runoff diverted from an undisturbed area shall outlet into an undisturbed stabilized area at a non-erosive velocity ($\leq$ 4 fps for grass).

4. The swale shall be excavated or shaped to line, grade, and cross section as required to meet the criteria specified in the standard.

5. Fill shall be compacted by earth moving equipment.

6. Stabilization of the area disturbed by the dike and swale shall be completed within 7 days and in accordance with the stabilization specifications on the plans (Ref: 20.0 Vegetative Stabilization).

7. Inspection and required maintenance shall be provided after each rain event.

Note: The maximum drainage area for this practice is 2 acres.

Outlet

1. A perimeter dike/swale shall have an outlet that functions without causing erosion.

2. Runoff diverted from a protected or stabilized upland area shall outlet directly onto an undisturbed stabilized area.

3. Runoff diverted from a disturbed or exposed upland area shall be conveyed to a sediment trapping device such as a sediment trap or sediment basin.

4. The location of a dike/swale may need to be adjusted in the field in order to provide positive drainage to a trapping device and to utilize the most suitable outlet.

Removal

Following completion of all construction and stabilization at a site with established vegetation, all temporary dike/swales shall be removed and the areas occupied by the dike/swales shall be graded and stabilized as specified on the plans.

DETAIL 3 – PERIMETER DIKE /SWALE

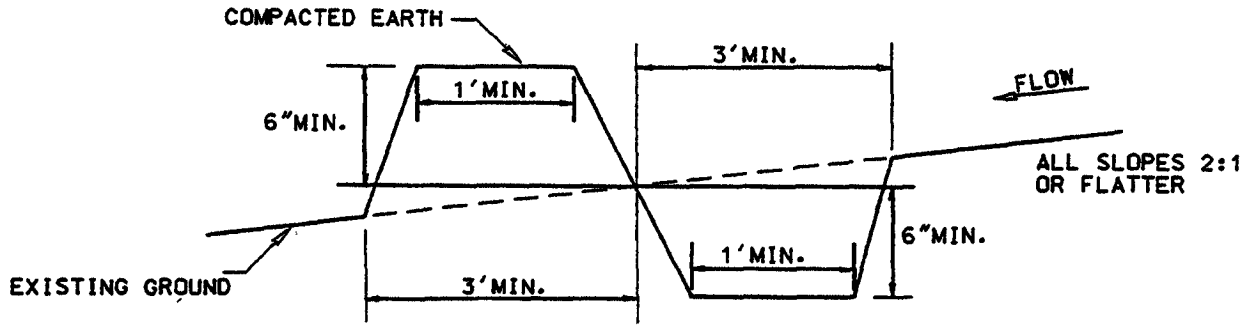

CROSS SECTION

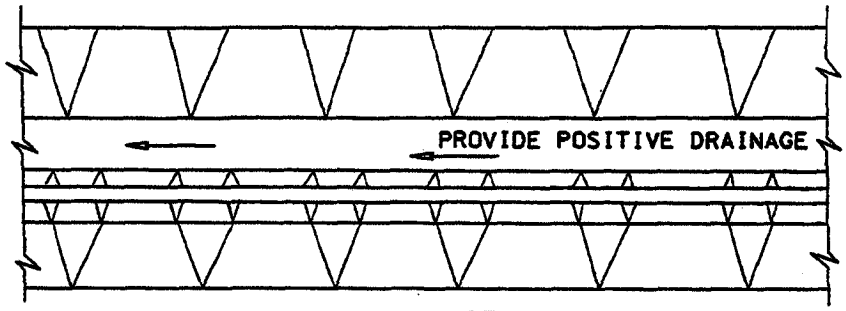

PLAN VIEW

STABILIZATION

PD/S-1 SEED AND MULCH (DRAINING ≤ 1 ACRE)
PD/S-2 SEED AND COVER WITH SOIL
STABILIZATION MATTING OR
LINE WITH SOD (DRAINING BETWEEN 1 AND 2 ACRES)

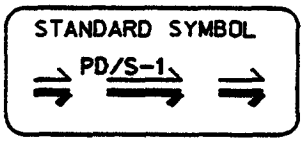

Construction Specifications

1. All perimeter dike/swales shall have an uninterrupted positive grade to an outlet. Spot elevations may be necessary for grades less than 1%.

2. Runoff diverted from a disturbed area shall be conveyed to a sediment trapping device.

3. Runoff diverted from an undisturbed area shall outlet into an undisturbed stabilized area at a non-erosive velocity.

4. The swale shall be excavated or shaped to line, grade, and cross-section as required to meet the criteria specified in the standard.

5. Fill shall be compacted by earth moving equipment.

6. Stabilization with seed and mulch or as specified of the area disturbed by the dike and swale shall be completed within 7 days upon removal.

7. Inspection and required maintenance shall be provided after each rain event.

Note: The maximum drainage area for this practice is 2 acres.

4.0 STANDARDS AND SPECIFICATIONS

FOR

TEMPORARY STORM DRAIN DIVERSION

Definition

Temporary storm drain diversions redirect a storm drain system or outfall channel to discharge into a sediment trap or basin.

Purpose

To prevent sediment laden water conveyed by the storm drain system from reaching a watercourse or off-site property.

Conditions Where Practice Applies

One of the following practices or procedures shall be used to temporarily divert storm drain systems. A special exception may be given, at the discretion of the local plan approval agency, where site conditions make this procedure impossible.

Design Criteria

1. Construction of a sediment trap or basin below a permanent storm drain outfall: the storm drain system outfalls into a temporary basin or trap constructed below the permanent outfall channel.

2. In-line diversion of storm drain at an inlet or manhole: this diversion requires installing a pipe stub in the side of a manhole or inlet and temporarily blocking the permanent outfall pipe from that structure. A temporary outfall ditch or pipe may be used to convey storm flow from the stub to a sediment trap or basin. This method may be used just above a permanent outfall or prior to connecting into an existing storm drain system.

3. Delay completion of the permanent storm drain outfall and temporarily divert storm flow into a sediment basin or trap: an earth dike, swale or designed diversion, can be used depending on the drainage area, to direct flow into a sediment basin or trap.

4. Installation of a stormwater management basin early in the construction sequence: install temporary measures to allow use as a sediment basin. Because these structures are designed to receive storm drain outfalls, diversion should not be necessary.

5. Inlet protection is not required if storm drain diversions have been installed and are functioning properly.

Removal and Restoration

When the areas contributing sediment to the storm drain system have been stabilized, restore the system to its planned use.

The following removal and restoration procedure is recommended and must be included in the sequence of operations for the sediment control plan:

1. Flush the storm drain system prior to removal of the trap or basin to remove any accumulated sediment.

2. Establish a permanent stabilized outfall channel as noted on the plans.

3. For sites where an inlet was modified, plug the temporary pipe stub and open the permanent outfall pipe.

4. Remove the sediment control devices, such as traps, basins, dikes, swales, etc..

5. Restore the area to grades shown on the plan and stabilize with vegetative measures.

6. For basins that will be converted to stormwater management, remove the accumulated sediment, open the low flow orifice, and seed all disturbed areas in the basin to permanent vegetation.

Section B - GRADE STABILIZATION STRUCTURES

5.0 STANDARDS AND SPECIFICATIONS

FOR

PIPE SLOPE DRAIN

Description of Practice

A pipe slope drain is a pipe that is installed to convey surface runoff down the face of unstabilized slopes. It is used to minimize erosion on the slope face. Use of flexible piping is preferred.

Conditions Where Practice Applies

Pipe slope drains are used in conjunction with earth dikes. The dikes direct surface runoff to the slope drain, which conveys concentrated flow down the face of a slope. When used to convey water down an unstabilized fill slope on a road construction project the drainage area to the pipe slope drain will be limited to 2 acres. When used as an inflow protection device the drainage area will be 5 acres.

Table 6 Design Criteria for Pipe Slope Drain

Size	Diameter (inches)	Pipe/Tubing Maximum Drainage Area (Acres)
PSD-12	12	0.5
PSD-18	18	1.5
PSD-21	21	2.5
PSD-24	24	3.5
PSD-(2) (24)[1]	24	5.0

Inlet

At the inlet of the pipe slope drain, the height of the earth dike shall be at least two times the pipe diameter and measured from the invert of the pipe . A standard flared entrance section shall be installed and secured at the inlet to the pipe slope drain with a watertight connection. To prevent erosion, geotextile fabric shall be placed under the inlet and shall extend 5' in front of the inlet and be keyed in 6" on all sides.

Outlet

When the drainage area is disturbed, the pipe slope drain shall outlet into a sediment trap or basin, or a stable conveyance that leads to a trap or basin. The point of discharge shall be as far away from the trap or basin outlet structure as possible. When the drainage area is stabilized, the pipe slope drain shall outlet onto a stabilized area at a non-erosive velocity. The point of discharge may be protected by rock outlet protection.

[1] Due to the height limitations on earth dikes, the maximum pipe diameter for pipe slope drain is 24". For drainage areas over 3 1/2 acres two 24" pipes shall be used. A minimum spacing of 2D (4 feet) is required between pipes.

Construction Specifications

1. The Pipe Slope Drain (PSD) shall have a slope of 3 percent or steeper.

2. The top of the earth dike over the inlet pipe shall be at least 2 times the pipe diameter measured at the invert of the pipe.

3. Flexible tubing is preferred. However, corrugated metal pipe or equivalent PVC pipe can be used. All connections shall be watertight.

4. A flared end section shall be attached to the inlet end of pipe with a watertight connection. Geotextile Class E[2] or better shall be placed under the inlet of the pipe slope drain and shall extend out 5' from the inlet. The geotextile fabric shall be keyed in on all sides.

5. The Pipe Slope Drain shall be securely anchored to the slope. Spacing for anchors shall be as provided by manufacturer's specification. In no case shall less than two (2) anchors be provided, equally spaced along the length of pipe. These details should be provided by pipe suppliers.

6. The soil around and under the pipe and end section shall be hand tamped in 4 inch lifts to the top of the earth dike.

7. Whenever possible where a PSD drains an unstabilized area, it shall outlet into a sediment trap or basin. If this is not possible then the slope drain will discharge into a stable conveyance that leads to a sediment trap or basin. When discharging into a trap or basin the PSD shall discharge at the same elevation as the wet pool elevation. The discharge from the PSD must be as far away from the sediment control outlet as possible.

8. When the drainage area is stabilized, the PSD shall discharge onto a stabilized area at a non-erosive velocity. 4"- 7" stone underlain with Geotextile Class C[3] shall be employed as necessary.

9. Inspection and any required maintenance shall be performed periodically and after each rain event.

10. The inlet must be kept open at all times.

[2,3] Refer to Table 27.

This Page Intentionally Left Blank

DETAIL 4 – PIPE SLOPE DRAIN

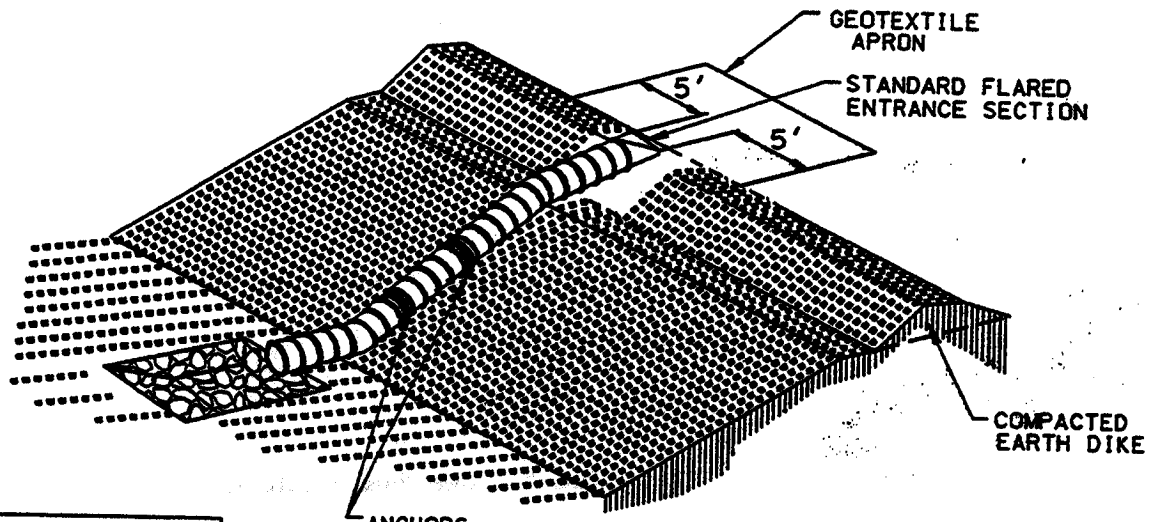

DISCHARGE INTO A STABILIZED WATER-COURSE, SEDIMENT TRAPPING DEVICE, OR INTO A STABILIZED AREA AT A NON-EROSIVE VELOCITY. REF: 18.0 ROCK OUTLET PROTECTION

STANDARD SYMBOL

PSD – 12

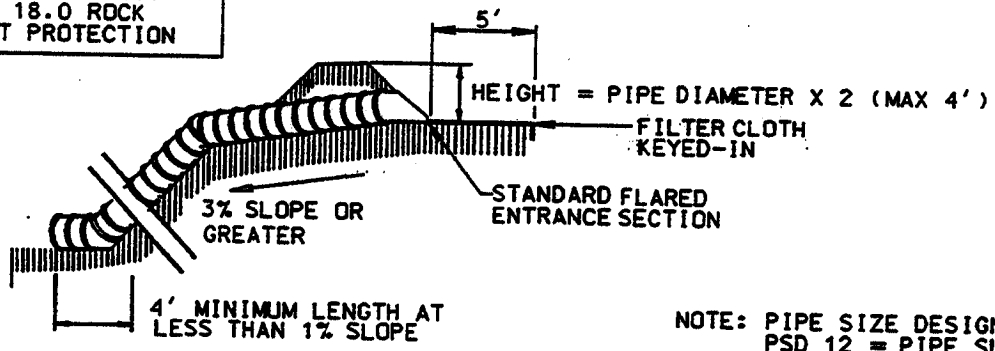

NOTE: PIPE SIZE DESIGNATION IS: PSD 12 = PIPE SLOPE DRAIN WITH A 12" DIAMETER PIPE.

Table 6 Design Criteria for Pipe Slope Drain

Size	Pipe/Tubing Diameter (D) in	Maximum Drainage Area (Acres)
PSD-12	12	0.5
PSD-18	18	1.5
PSD-21	21	2.5
PSD-24	24	3.5
PSD-24 (2)	24	5.0

PIPE SLOPE DRAIN

Construction Specifications - Pipe Slope Drain

1. The Pipe Slope Drain (PSD) shall have a slope of 3 percent or steeper.

2. The top of the earth dike over the inlet pipe shall be at least 2 times the pipe diameter measured at the invert of the pipe.

3. Flexible tubing is preferred. However, corrugated metal pipe or equivalent PVC pipe can be used. All connections shall be watertight.

4. A flared end section shall be attached to the inlet end of pipe with a watertight connection. Filter cloth shall be placed under the inlet of the pipe slope drain and shall extend out 5' from the inlet. The filter cloth shall be "keyed in" on all sides.

5. The Pipe Slope Drain shall be securely anchored to the slope by staking at the grommets provided. Spacing for anchors shall be as provided by manufacturer's specification. In no case shall less than two (2) anchors be provided, equally spaced along the length of pipe. These details should be provided by pipe suppliers.

6. The soil around and under the pipe and end section shall be hand tamped in 4 inch lifts to the top of the earth dike.

7. All pipe connections shall be watertight.

8. Whenever possible where a PSD drains an unstabilized area, it shall outlet into a sediment trap or basin. If this is not possible then the slope drain will discharge into a stable conveyence that leads to a sediment trap or basin. When discharging into a trap or basin the PSD shall discharge at the same elevation as the wet pool elevation. The discharge from the PSD must be as far away from the sediment control outlet as possible.

9. When the drainage area is stabilized, the PSD shall discharge onto a stabilized area at a non-erosive velocity.

10. Inspection and any required maintenance shall be performed periodically and after each rain event.

11. The inlet must be kept open at all times.

6.0 STANDARDS AND SPECIFICATIONS

FOR

RIP-RAP INFLOW PROTECTION

Definition

A temporary or permanent, lined drainageway installed to convey concentrated runoff into sediment traps and basins or down steep slopes as applicable. Rip-rap Inflow Protection consists of the installation of rock or recycled concrete equivalent in a flow channel for stabilization.

Purpose

The purpose of Rip-rap Inflow Protection is to provide stable conveyance of concentrated runoff down steep slopes, (i.e. into temporary sediment traps and basins) thereby preventing erosion of the flow channel.

Conditions Where Practice Applies

Rip-rap Inflow Protection is required where the slope of a drainage way contributing to a sediment trap or basin exceeds 10:1 but is less than 4:1. Runoff may be directed to the inflow device by means of dikes or swales.

Design Criteria

Rip-rap Inflow protection shall be 4"- 12" rip-rap (min.), underlain with Geotextile Class C[4] and placed from the ditch overfall elevation to the bottom of the trap or basin when the inflow slope is between 4:1 and 10:1. Slopes flatter than 10:1 shall be stabilized in accordance with Temporary Swale or Earth Dike criteria as applicable. For slopes steeper than 4:1, see Gabion Inflow Protection.

Construction Specifications

1. Rip-rap Inflow Protection shall be 1' in depth, have a trapezoidal cross section with 2:1 or flatter side slopes and a 3' minimum bottom width. The channel shall be lined with 4" - 12" rip-rap or SHA Class I[5] to a depth of 18".
2. Filter cloth shall be installed under all rip-rap. Filter cloth shall be Geotextile Class C.
3. Entrance and exit sections shall be installed as shown on the detail section.
4. Rip-rap used for the lining may be recycled for permanent outlet protection if the basin is to be converted to a stormwater management facility.
5. Gabion Inflow Protection may be substituted for Rip-rap Inflow Protection.
6. Rip-rap should blend into existing ground.
7. Rip-rap Inflow Protection shall be used where the slope is between 4:1 and 10:1. For slopes flatter than 10:1 use Earth Dike or Temporary Swale.

---

[4] Refer to Table 27

[5] See Table 28

DETAIL 5 – RIP-RAP INFLOW PROTECTION

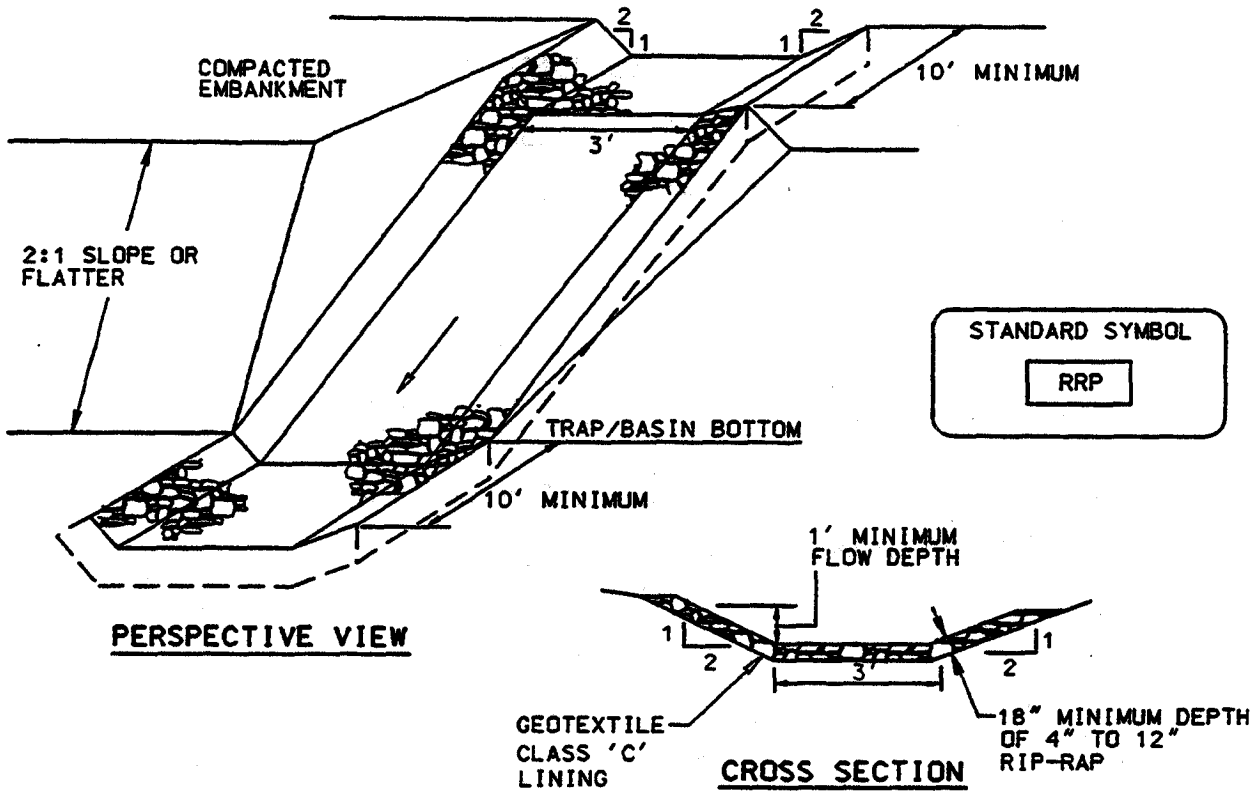

Construction Specifications

1. Rip-rap lined inflow channels shall be 1' in depth, have a trapezoidal cross section with 2:1 or flatter side slopes and 3' (min.) bottom width. The channel shall be lined with 4" to 12" rip- rap to a depth of 18".

2. Filter cloth shall be installed under all rip-rap. Filter cloth shall be Geotextile Class C.

3. Entrance and exit sections shall be installed as shown on the detail section.

4. Rip-rap used for the lining may be recycled for permanent outlet protection if the basin is to be converted to a stormwater management facility.

5. Gabion Inflow Protection may be used in lieu of Rip-rap Inflow Protection.

6. Rip-rap should blend into existing ground.

7. Rip-rap Inflow Protection shall be used where the slope is between 4:1 and 10:1. for slopes flatter than 10:1 use Earth Dike or Temporary Swale lining criteria.

7.0 STANDARDS AND SPECIFICATIONS

FOR

GABION INFLOW PROTECTION

Definition

A temporary or permanent, lined drainageway installed to convey concentrated runoff into sediment traps and basins or down steep slopes as applicable. Gabion Inflow Protection consists of the installation of wire baskets (Gabions) filled with rock or recycled concrete equivalent in a flow channel for stabilization.

Purpose

The purpose of Gabion Inflow Protection is to provide stable conveyance of concentrated runoff down steep slopes, (i.e. into temporary sediment traps and basins) thereby preventing erosion of the flow channel.

Conditions Where Practice Applies

Gabion Inflow Protection is required where the slope of a drainage way contributing to a sediment trap or basin, or other steep area as applicable, exceeds 4:1 (25%). Surface runoff may be directed to the inflow device by means of dikes or swales.

Design Criteria

Gabion Inflow Protection shall be 4"- 7" stone[6] (min.) placed within manufactured wire baskets, underlain with Geotextile Class C[7] and placed from the ditch overfall elevation to the bottom of the trap or basin when the inflow slope is between 2:1 and 4:1. Slopes flatter than 10:1 shall be stabilized in accordance with Temporary Swale or Earth Dike criteria as applicable. For slopes between 4:1 and 10:1, see Rip-rap Inflow Protection.

Construction Specifications

1. Gabion Inflow Protection shall be constructed by arranging 9'x 3'x 9" gabion baskets forming a trapezoidal cross section 1' deep with 2:1 side slopes and 3' bottom width.
2. Geotextile Class C shall be installed under all gabion baskets.
3. The stone used to fill the gabion baskets shall be 4" - 7".
4. Gabion shall be installed in accordance with manufacturer's recommendations.
5. Gabion Inflow Protection shall be used where concentrated flow is present on slopes steeper than 4:1.

---

[6] See Table 28

[7] Refer to Table 27

DETAIL 6 – GABION INFLOW PROTECTION

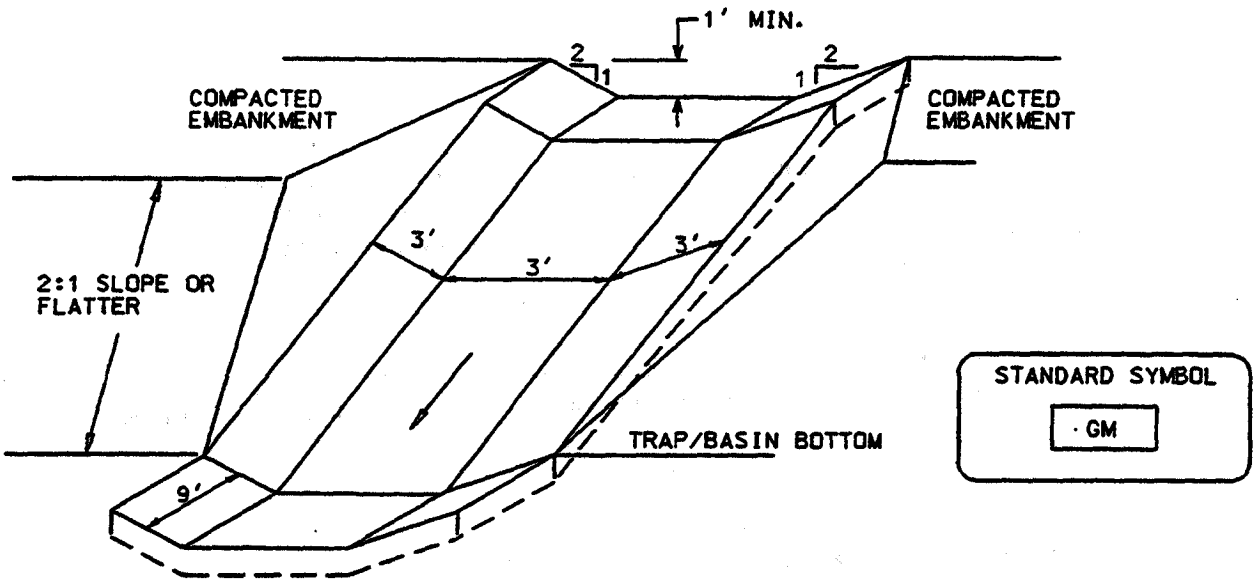

PERSPECTIVE VIEW

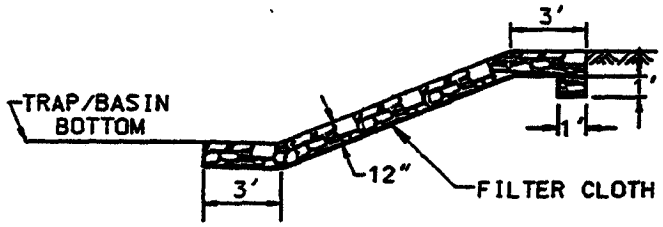

PROFILE ALONG CENTERLINE

Construction Specifications

1. Gabion inflow protection shall be constructed of 9' x 3' x 9" gabion baskets forming a trapezoidal cross section 1' deep, with 2:1 side slopes, and a 3' bottom width.
2. Geotextile Class C shall be installed under all gabion baskets.
3. The stone used to fill the gabion baskets shall be 4" - 7".
4. Gabions shall be installed in accordance with manufacturers recommendations.
5. Gabion Inflow Protection shall be used where concentrated flow is present on slopes steeper than 4:1.

8.0 STANDARDS AND SPECIFICATIONS

FOR

STONE CHECK DAMS

Description of Practice

Stone Check Dams are stone weirs placed in series in swales or ditches.

Purpose

Stone Check Dams are constructed to reduce runoff velocities to non-erosive rates and to prevent channel erosion in drainage courses.

Design Criteria

1. Stone check dams shall be located so as to provide maximum velocity reduction. This may be achieved by considering the volume of runoff, the drainage area and the slope. The check dams should be placed in reasonably straight ditch sections to minimize the potential for erosion in the channel bend. All stone check dams should be keyed into the sides and bottom of the channel. **This practice is not to be used as a sediment trapping device.** Sediment laden runoff must pass through a sediment trapping device prior to being discharged from the site.

2. The distance between the Stone Check Dams will vary with the longitudinal ditch slope. Stone Check Dams shall be constructed using 4"- 7" stone[8] or recycled concrete equivalent and shall be placed to form a weir. The outlet crest or the top of the stone weir shall be approximately 6" lower than the outer edges. The inside or upstream side of the weir shall be lined with a 1' thick layer of washed (3/4" to 1 1/2") crushed aggregate. Geotextile Class E[9] or better under the bottom and sides of the dam prior to placement of stone is optional.

3. The height of the stone outlet weir should not exceed one-half the depth of the ditch or swale. Additionally, the maximum height of the weir must not exceed 2.0 feet to prevent scour of the toe of the dam. If the check dam exceeds this, these provisions do not apply and an engineering analysis should be conducted. The stone check dam should be wide enough to reach from bank to bank of the ditch or swale with the weir section length in the center of the dam.

4. The number of check dams will depend on the length and slope of the ditch or swale.

---

[8] Refer to Table 28

[9] Refer to Table 27

5. The required spacing is determined as:

$$x = \frac{y}{S}$$

where:

x = Check dam spacing (ft)
y = Check dam height (ft)
S = Natural channel slope (ft/ft)

Figure 1 may be used to determine the check dam spacing. The spacing requirements do not change significantly with varying ditch cross sections, but are most sensitive to the channel slope and height of the check dam.

Construction Specifications

1. Swales and ditches shall be prepared in accordance with the construction specifications described in Section A-2, Standards and Specifications for Temporary Swale.
2. The check dam shall be constructed of 4" to 7" stone. The stone shall be placed so that it completely covers the width of the channel and keyed into the channel banks.
3. The top of the check dam shall be constructed so that the center is approximately 6 inches lower than the outer edges, forming a weir that water can flow across.
4. The maximum height of the check dam at the center shall not exceed 2'.
5. The upstream side of the check dam shall be lined with approximately 1' of 3/4" - 1½" aggregate.
6. Accumulated sediment shall be removed when it has built up to 1/2 of the original height of the weir crest.

Sediment Removal

While this practice is not intended to be used for sediment trapping, some sediment will accumulate behind the check dam. Check dams should be checked periodically and after each significant rainfall. Accumulated sediment should be removed when it has reached 1/2 of the original height of the weir crest.

Check Dam Removal

In temporary swales and channels, check dams should be removed and the ditch filled in when it is no longer needed. In permanent channel structures, check dams may be removed when a permanent lining can be installed. In the case of grass lined ditches, check dams may be removed when the grass has matured sufficiently to protect the swale or channel. The area beneath the check dams should be seeded and mulched immediately after they are removed.

DETAIL 7 – STONE CHECK DAM

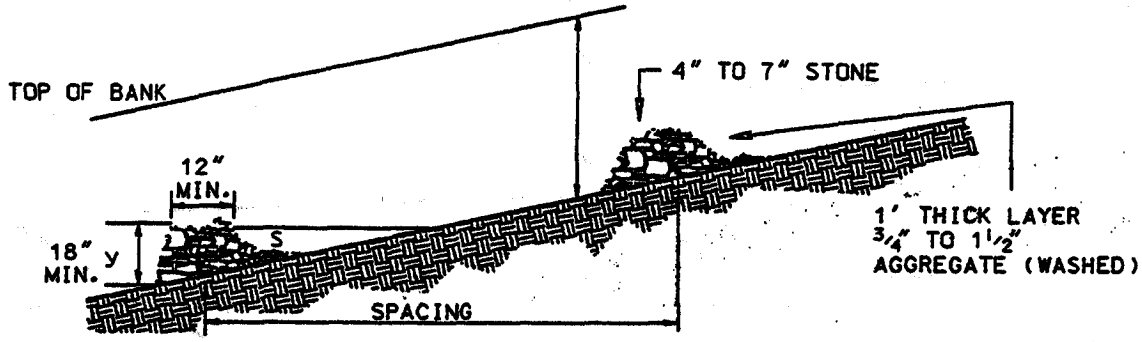

DITCH PROFILE

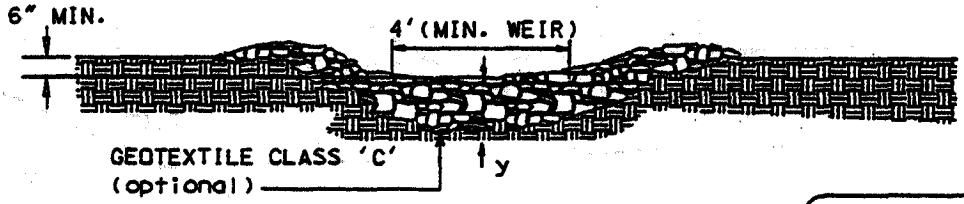

CROSS SECTION

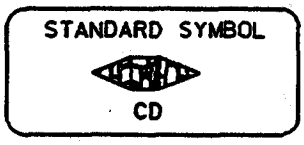

STANDARD STONE CHECK DAM DESIGN

SLOPE	SPACING
2% or less	80'
2.1% to 4%	40'
4.1% to 7%	25'
7.1% to 10%	15'
over 10%	use lined waterway design

Construction Specifications

1. Swales and ditches shall be prepared in accordance with the construction specifications described in Section A-2. Standards and Specifications for Temporary Swale.
2. The check dam shall be constructed of 4"-7" stone. The stone shall be placed so that it completely covers the width of the channel and is keyed into the channel banks.
3. The top of the check dam shall be constructed so the the center is approximately 6" lower than the outer edges. forming a weir that water can flow across.
4. The maximum height of the check dam at the center shall not exceed 2'.
5. The upstream side of the check dam shall be lined with approximately 1' of 3/4" to 1 1/2" aggregate.
6. Accumulated sediment shall be removed when it has built up to 1/2 of the original height of the weir crest.

FIGURE 1

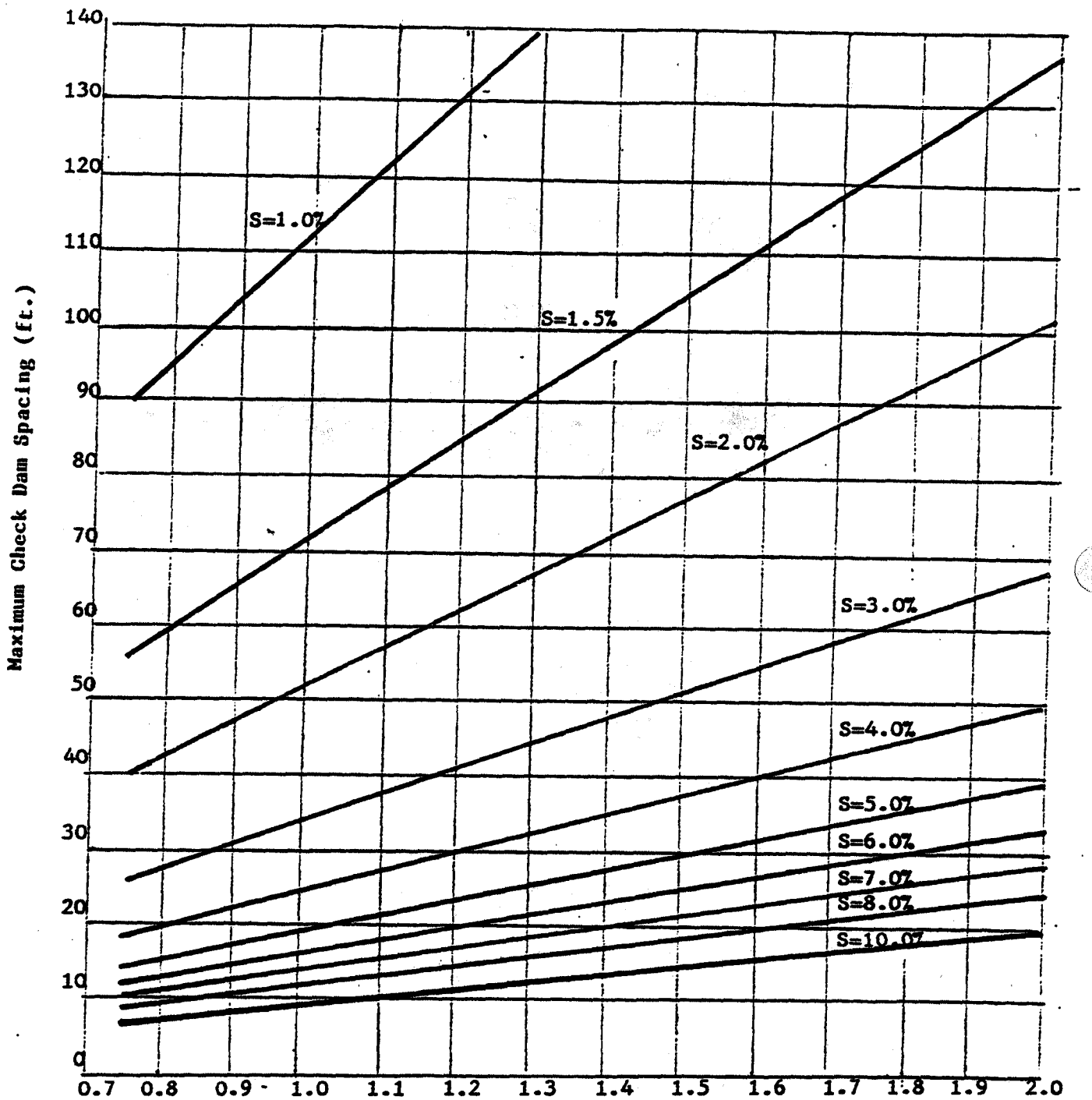

Design of Stone Check Dam Spacing

(n=0.030, Ve = 2.0 fps)

Section C - SEDIMENT TRAPPING DEVICES

9.0 STANDARDS AND SPECIFICATIONS

FOR

SEDIMENT TRAPS

Definition

A temporary sediment control device formed by excavation and/or an embankment with an approved outlet used to intercept sediment laden runoff and to retain the sediment.

Purpose

The purpose of a sediment trap is to intercept sediment laden runoff and trap the sediment in order to protect drainageways, properties, and rights-of-way downstream of the sediment trap from sedimentation.

Conditions Where Practice Applies

A sediment trap is installed at points of discharge from a disturbed area.

Wet and Dry Storage

The storage requirement for sediment traps I, II and IV and sediment basins is 3600 cubic feet per acre of contributory drainage area. The sediment traps and basins storage volume of 3600 cubic feet minimum per acre shall be divided equally into "dry" or dewatered storage and "wet" or retention storage. The basins and traps will be dewatered to the wet pool elevation corresponding to 1800 cubic feet of storage per acre of drainage. Sediment trap III consists of only "wet" storage and the volume required is 5400 cubic feet per acre of drainage area.

Design Criteria

1. The maximum drainage area for each type sediment trap shall be as follows:

Practice #	Practice Type	Max. Drainage Area
ST-I	Pipe Outlet	5.0 ac.
ST-II	Stone Outlet	5.0 ac.
ST-III	Rip-rap Outlet	10.0 ac.
ST-IV	Stone Outlet/Rip-rap Outlet	10.0 ac.

2. The volume of a natural sediment trap may be approximated by the equation:

   Volume (ft^3) = 0.4 x surface area (ft^2) x maximum depth (ft).

3. Sediment traps shall be located so that they can be installed prior to grading or filling. Traps must not be located any closer than 20 feet from an existing building foundation. Care must be taken when placing sediment traps in structural fill areas (i.e. proposed roadways and building foundations). When these traps are removed the wet soil around the traps must also be removed to facilitate compaction. Trap bottoms shall be generally level. Plan view must indicate bottom dimensions. Showing contours/grading of traps may be required on plans to ensure constructability.

Locate traps to:

a. Obtain maximum storage benefit from the terrain with a 2:1 length to width ratio desired.
b. Facilitate cleanout.
c. Facilitate disposal of the trapped sediment.

4. Sediment shall be removed and the trap restored to the original dimensions when the sediment has accumulated to one half of the wet storage depth of the trap. Sediment removed from the trap shall be deposited in a protected area and in such a manner that it will not erode.

5. **All embankments for sediment traps shall not exceed 4' in height as measured at the low point of the original ground along the centerline of the embankment.** Embankments shall have a minimum 4' wide top and side slopes of 2:1 or flatter. The embankment shall be compacted by traversing with equipment while it is being constructed. Once constructed the top and outside face of the embankment shall be stabilized with seed and mulch. Points of concentrated inflow shall be protected in accordance with Grade Stabilization Structure criteria. The remainder of the interior slopes should be stabilized (one time) with seed and mulch upon trap completion and monitored and maintained erosion free during the life of the trap.

The elevation of the top of any dike directing water to any sediment trap will equal or exceed the maximum elevation of the embankment along the entire length of the trap.

6. All excavation operations shall be carried out in such a manner that erosion and water pollution shall be minimized. Sediment traps shall have 2:1 or flatter side slopes.

7. The outlet shall be designed, according to the standards set forth herein, constructed and maintained in such a manner that sediment does not leave the trap and that erosion at or below the outlet does not occur. Sediment traps must outlet onto stabilized (preferably undisturbed) ground, into a watercourse, stabilized channel, or into a storm drain system.

8. Following completion of all construction and stabilization at a site, all temporary sediment traps shall be removed and the areas occupied by the traps shall be graded and stabilized. Slope Silt Fence or other sediment control devices may be required during trap removal.

<u>If any of the design criteria presented here cannot be met, see Standard and Specifications for Sediment Basin.</u>

Trap details needed on Soil Erosion and Sediment Control Plans

There is no standard symbol for a sediment trap. Each trap shall be delineated on the plans in such a manner that it will not be confused with any other features. Each plan shall include all the information necessary to properly construct and maintain the trap. If tablular form is used to present the numbered information below, then each trap on the plan shall have a number and the numbers shall be consecutive. Please use caution in siting sediment traps, plot contours if necessary to ensure constructability. The following information, at a minimum, shall be shown for each trap on the plans:

1. Trap number.
2. Type of trap (ST-I, ST-II, etc.).
3. Drainage area (5 acres max. for ST-I and ST-II, 10 acres max. for ST-III and ST-IV).
4. Storage required (total).
5. Storage provided (total).
6. Weir length or pipe size, outfall length (for ST-IV) and channel depth (for ST-III).
7. Storage depth below outlet and cleanout elevation.
8. Embankment height and elevation (if applicable).
9. Typical detail of each trap used.
10. Trap bottom, wet storage limit and crest elevations.

Individual Practice Design Criteria

9.1 Pipe Outlet Sediment Trap ST-I

This practice consists of a trap formed by an embankment or excavation. The outlet for the trap is through a perforated riser and a barrel pipe through the embankment. The barrel pipe and riser shall be made of corrugated metal or PVC pipe. All pipes shall be circular and watertight. The top of the embankment shall be at least 1 foot above the crest of the riser.

The riser shall be perforated above the wet pool elevation. Perforations shall be slits 1/2" wide by 6 inches in length or 1 inch diameter holes spaced six (6) inches both vertically and horizontally.

No perforations will be allowed within six (6) inches of the top of the horizontal barrel. All pipe connections shall be watertight. The riser shall be wrapped with 1/2" hardware cloth (wire) then wrapped with Geotextile Class E[10] and secured with strapping or connecting bands at the top and bottom of the cloth. The hardware cloth and geotextile shall cover an area at least six (6) inches above the highest perforation and six (6) inches below the lowest perforation. The top of the riser pipe shall have a trash rack/anti-vortex device that meets the requirements of Detail 16 and shall not be covered with geotextile fabric.

The riser shall have a base with sufficient weight to prevent flotation of the riser. Two approved bases are:

1. A concrete base twice the diameter of the riser, 12" thick with the riser embedded 9" into the concrete base (see Detail 15).

2. A 1/4" inch minimum thickness steel plate attached to the riser by a continuous weld around the circumference of the riser to form a watertight connection. The plate shall have 2' of stone, gravel, or recycled concrete placed on it to prevent flotation. In either case, each side of the square base measurement shall be the riser diameter plus 24 inches.

Note: Pipe outlet sediment traps shall be limited to five (5) acres maximum drainage area.

Table 7 Pipe Outlet Diameter Selection

Minimum Sizes Barrel Diam. (Inches)	Minimum Sizes Riser Diam. (Inches)	Minimum Sizes Trash Rack Diam. (Inches)	Maximum Drainage Area (Acres)
12"	15"	21"	1
15"	18"	27"	2
18"	21"	30"	3
21"	24"	36"	4
21"	27"	42"	5

[10] Refer to Table 27.

Construction Specifications

1. The area under the embankment shall be cleared, grubbed and stripped of any vegetation and root mat. The pool area shall be cleared.

2. The fill material for the embankment shall be free of roots or other woody vegetation as well as oversized stones, rocks, organic material, or other objectionable material. The embankment shall be compacted by traversing with equipment while it is being constructed.

3. The total trap volume shall be 3600 cubic feet/acre of contributory drainage area (See Table 9). The top of the embankment must be $\geq$ 1'above the crest of the riser.

4. Sediment shall be removed and the trap restored to its original dimensions when the sediment has accumulated to one half of the wet storage depth of the trap (900 cf/ac). The sediment shall be deposited in a suitable area and in such a manner that it will not erode.

5. The structure shall be inspected periodically and after each rain and repairs made as needed.

6. Construction operations shall be carried out in such a manner that erosion and water pollution are abated. Once constructed, the top and outside face of the embankment shall be stabilized with seed and mulch. Points of concentrated inflow shall be protected in accordance with Grade Stabilization Structure criteria. The remainder of the interior slopes should be stabilized (one time) with seed and mulch upon trap completion and monitored and maintained erosion free during the life of the trap.

7. The structure shall be removed and area stabilized when the drainage area has been permanently stabilized.

8. All cut and fill slopes shall be 2:1 or flatter.

9. All pipe connections shall be watertight.

10. Above the wet storage elevation, the riser shall be perforated with 1/2" wide by 6" long slits or 1" diameter holes spaced 6" vertically and horizontally. No perforations will be allowed within 6" of the horizontal barrel.

11. The riser shall be wrapped with 1/2" hardware cloth (wire) then wrapped with Geotextile Class E[11]. The geotextile fabric shall extend 6" above the highest slit and six 6" below the lowest slit. Where ends of geotextile fabric come together, they shall be overlapped, folded and fastened to prevent bypass. Geotextile fabric shall be replaced as necessary to prevent clogging.

[11] Refer to Table 27.

12. Straps or connecting bands shall be used to hold the geotextile fabric and wire fabric in place and shall be placed at the top and bottom of the cloth.

13. Fill material around the pipe spillway shall be hand compacted in 4" layers. A minimum of 2' of hand-compacted backfill shall be placed over the pipe spillway before crossing it with construction equipment.

14. The riser shall be anchored with either a concrete base or steel plate base to prevent flotation. Concrete bases shall be at least twice the riser diameter and 12" thick with the riser embedded 9". Steel bases shall be at least twice the riser diameter, 1/4" minimum thickness plate, attached to the bottom of the riser with a continuous weld to form a watertight connection, and covered with 2' of stone, gravel, or tamped earth.

15. Anti seep collars shall be designed in accordance with Table 16 and Details 13 and 14.

16. Concentric trash rack and anti-vortex device design details are on Detail 16.

17. Refer to Section D for dewatering requirements of sediment traps.

18. Outlet - An outlet shall be provided, including a means of conveying the discharge in an erosion free manner to an existing stable channel. Protection against scour at the discharge end of the pipe spillway shall be provided in accordance with the Standards and Specifications for Rock Outlet Protection or a practice from Section B - Grade Stabilization Structures.

19. Where discharge occurs at the property line, local ordinances and drainage easement requirements shall be met.

DETAIL 8 - PIPE OUTLET SEDIMENT TRAP - ST I

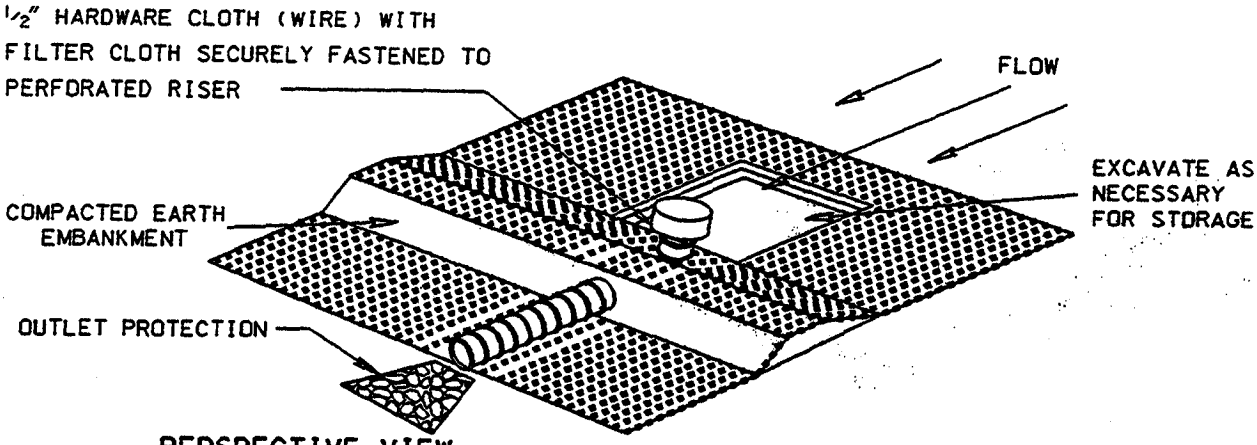

PERSPECTIVE VIEW

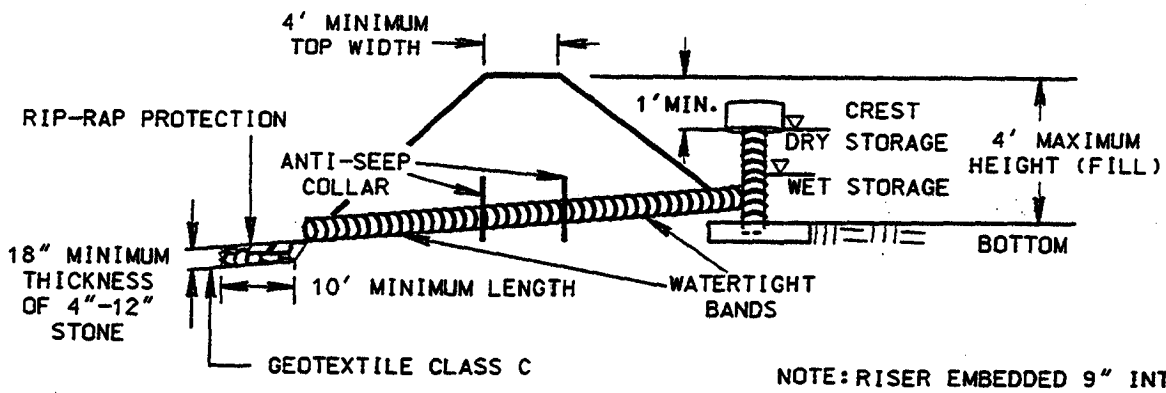

EMBANKMENT SECTION
THROUGH RISER

NOTE: RISER EMBEDDED 9" INTO CONCRETE OR ¼" STEEL PLATE ATTACHED TO RISER WITH A CONTINUOUS WELD ON BOTTOM AND 2' OF STONE PLACED ON STEEL PLATE TWICE THE RISER DIAMETER (MIN.)

Construction Specifications

1. The area under the embankment shall be cleared, grubbed and stripped of any vegetation and root mat. The pool area shall be cleared.

2. The fill material for the embankment shall be free of roots or other woody vegetation as well as oversized stones, rocks, organic material, or other objectionable material. The embankment shall be compacted by traversing with equipment while it is being constructed.

3. The total trap volume as measured from the bottom to riser crest elevation shall be 3600 cubic feet per acre of drainage area (see Table 9). The top of embankment must be ≥1' above the riser crest elevation.

4. Sediment shall be removed and the trap restored to its original dimensions when the sediment has accumulated to one half of the wet storage depth of the trap (900cf/ac). The sediment shall be deposited in a suitable area and in such a manner that it will not erode.

5. The structure shall be inspected periodically and after each rain and repairs made as necessary.

PIPE OUTLET SEDIMENT TRAP - ST I

6. Construction operations shall be carried out in such a manner that erosion and water pollution are abated. Once constructed, the top and outside face of the embankment shall be stabilized with seed and mulch. Points of concentrated inflow shall be protected in accordance with Grade Stabilization Structure criteria. The remainder of the interior slopes should be stabilized (one time) with seed and mulch upon trap completion and monitored and maintained erosion free during the life of the trap.

7. The structure shall be removed and area stabilized when the drainage area has been properly stabilized.

8. All cut and fill slopes shall be 2:1 or flatter.

9. All pipe connections shall be watertight.

10. Above the wet storage elevation, the riser shall be perforated with ½" wide by 6" long slits or 1" diameter holes spaced 6" vertically and horizontally. No perforations will be allowed within 6" of the horizontal barrel.

11. The riser shall be wrapped with ½" hardware cloth (wire) then wrapped with Geotextile Class E. The filter cloth shall extend 6" above the highest slit and 6" below the lowest slit. Where ends of filter cloth come together, they shall be overlapped, folded and fastened to prevent bypass. Filter cloth shall be replaced as necessary to prevent clogging.

12. Straps or connecting bands shall be used to hold the filter cloth and wire fabric in place. They shall be placed at the top and bottom of the cloth.

13. Fill material around the pipe spillway shall be hand compacted in 4" layers. A minimum of 2' of hand-compacted backfill shall be placed over the pipe spillway before crossing it with construction equipment.

14. The riser shall be anchored with either a concrete base or steel plate base to prevent flotation. Concrete bases shall be at least twice the riser diameter and 12" deep with the riser embedded 9". Steel plate bases shall be at least twice the riser diameter, ¼" minimum thickness and attached to the bottom of the riser by a continuous weld to form a watertight connection. Then place 2' of stone, gravel or tamped earth on the plate.

15. Anti seep collars shall be constructed in accordance with plans (ref. table 16 and Details 13 and 14).

16. Concentric trash rack and anti-vortex device design details are on Detail 16.

17. Refer to Section D for dewatering requirements of sediment traps.

18. Outlet - An outlet shall be provided, which includes a means of conveying the discharge in an erosion free manner to an existing stable channel.

19. Where discharge occurs at the property line, local ordinances and drainage easement requirements shall be met.

9.2 Stone Outlet Sediment Trap ST-II

This practice consists of a trap formed by an embankment or excavation. The outlet of this trap is over a stone section placed on level ground. The minimum length weir (feet) of the outlet shall be equal to four (4) times the drainage area (acres).

The outlet crest (top of stone in weir section) shall be level, at least 1' foot below the top of the embankment and no more than 3' above ground beneath the outlet. 4" to 7" stone[12] or recycled concrete equivalent over Geotextile Class C[13] shall be used in the outlet. A 1' thick layer of 3/4" to 1 1/2" washed aggregate[14] shall be placed on the upstream face of the outlet. Geotextile Class C placed on the upstream face of the outlet may be substituted for the small stone.

Note: Stone outlet sediment traps shall be limited to a 5 acre maximum drainage area.

Construction Specifications

1. The area under the embankment shall be cleared, grubbed and stripped of any vegetation and root mat. The pool area shall be cleared.

2. The fill material for the embankment shall be free of roots and other woody vegetation as well as over-sized stones, rocks, organic material or other objectionable material. The embankment shall be compacted by traversing with equipment while it is being constructed.

3. All cut and fill slopes shall be 2:1 or flatter.

4. The stone used in the outlet shall be 4" - 7" stone with a 1' thick layer of 3/4" to 1 1/2" washed aggregate placed on the upstream face of the outlet. Stone facing shall be maintained as necessary to prevent clogging. Geotextile Class C may be substituted for the stone facing by placing it on the inside face of the outlet.

5. Sediment shall be removed and the trap restored to its original dimensions when the sediment has accumulated to one half of the wet storage depth of the trap. Removed sediment shall be deposited in a suitable area and in such a manner that it will not erode.

6. The structure shall be inspected periodically and after each rain and repairs made as needed.

7. Construction of traps shall be carried out in such a manner that sediment pollution is abated. Once constructed, the top and outside face of the embankment shall be stabilized with seed and mulch. Points of concentrated inflow shall be protected in accordance with Grade Stabilization Structure criteria. The remainder of the interior slopes should be stabilized (one time) with seed and mulch upon trap completion and monitored and maintained erosion free during the life of the trap.

[12,14] Refer to Table 28

[13] Refer to Table 27

8. The structure shall be removed and the area stabilized when the drainage area has been properly stabilized.

9. Refer to Section D for specifications concerning trap dewatering.

10. Minimum trap depth shall be measured from the weir elevation.

11. The elevation of the top of any dike directing water into the trap must equal or exceed the elevation of the trap embankment.

12. Geotextile Class C shall be placed over the bottom and sides of the outlet channel prior to the placement of stone. Sections of geotextile fabric must overlap at least 1' with the section nearest the entrance placed on top. The geotextile fabric shall be embedded at least 6" into existing ground at the entrance of the outlet channel.

13. Outlet - An outlet shall be provided, including a means of conveying the discharge in an erosion free manner to an existing stable channel.

14. For storage requirements see Table 9.

DETAIL 9 - STONE OUTLET SEDIMENT TRAP - ST II

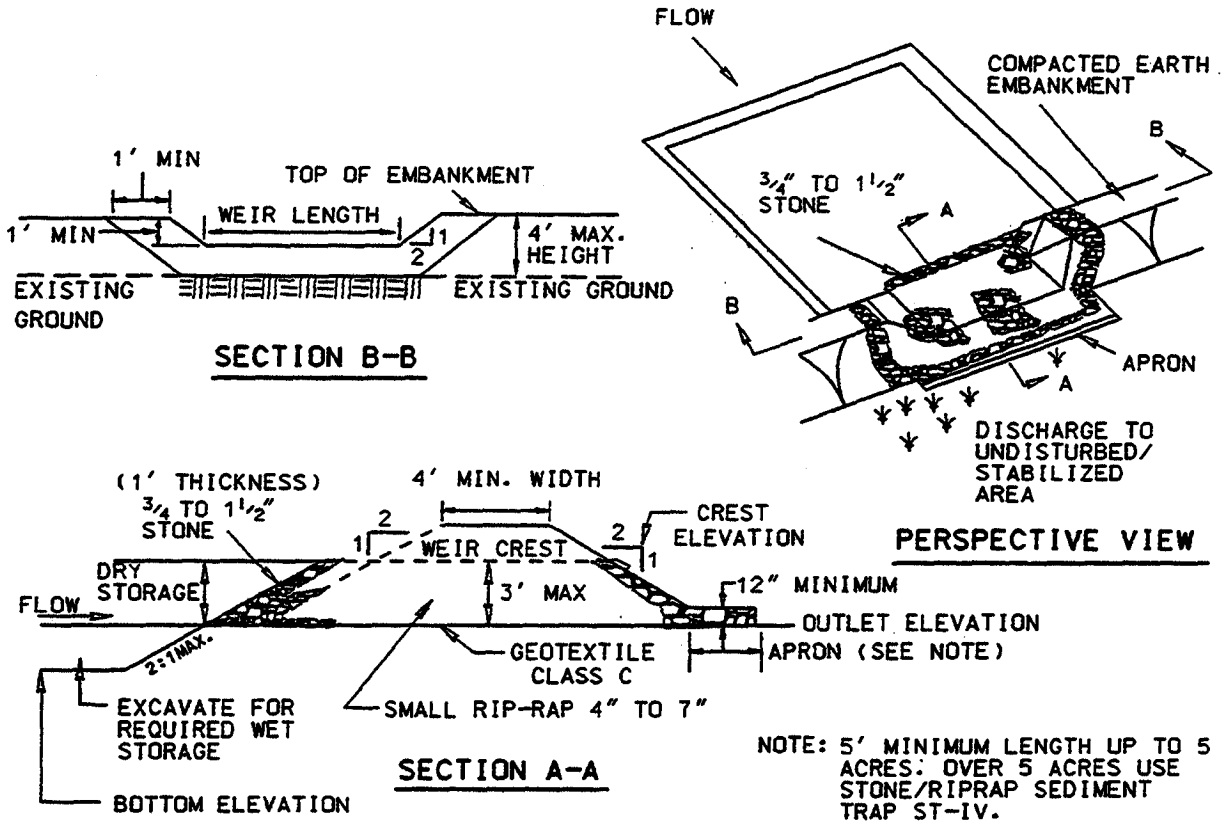

Construction Specifications

1. Area under embankment shall be cleared, grubbed and stripped of any vegetation and root mat. The pool area shall be cleared.

2. The fill material for the embankment shall be free of roots and other woody vegetation as well as over-sized stones, rocks, organic material or other objectionable material. The embankment shall be compacted by traversing with equipment while it is being constructed.

3. All cut and fill slopes shall be 2:1 or flatter.

4. The stone used in the outlet shall be small rip-rap 4" to 7" in size with a 1' thick layer of 3/4" to 1 1/2" washed aggregate placed on the upstream face of the outlet. Stone facing shall be as necessary to prevent clogging. Geotextile Class C may be substituted for the stone facing by placing it on the inside face of the stone outlet.

5. Sediment shall be removed and trap restored to its original dimensions when the sediment has accumulated to one half of the wet storage depth of the trap. Removed sediment shall be deposited in a suitable area and in such a manner that it will not erode.

STONE OUTLET SEDIMENT TRAP - ST II

6. The structure shall be inspected periodically and after each rain and repairs made as needed.

7. Construction of traps shall be carried out in such a manner that sediment pollution is abated. Once constructed, the top and outside face of the embankment shall be stabilized with seed and mulch. Points of concentration inflow shall be protected in accordance with Grade Stabilization Structure criteria. The remainder of the interior slopes should be stabilized (one time) with seed and mulch upon trap completion and monitored and maintained erosion free during the life of the trap.

8. The structure shall be dewatered by approved methods, removed and the area stabilized when the drainage area has been properly stabilized.

9. Refer to Section D for specifications concerning trap dewatering.

10. Minimum trap depth shall be measured from the weir elevation.

11. The elevation of the top of any dike directing water into the trap must equal or exceed the elevation of the trap embankment.

12. Geotextile Class C shall be placed over the bottom and sides of the outlet channel prior to the placement of stone. Sections of filter cloth must overlap at least 1' with the section nearest the entrance placed on top. The filter cloth shall be embedded at least 6" into existing ground at the entrance of the outlet channel.

13. Outlet - An outlet shall be provided, including a means of conveying the discharge in an erosion free manner to an existing stable channel.

9.3 Rip-rap Outlet Sediment Trap ST-III

This practice consists of a trap formed by an excavation and embankment. The outlet for this trap shall be through a partially excavated channel lined with rip-rap or recycled concrete equivalent. The outlet channel shall discharge onto a stabilized area or to a stable watercourse. **The rip-rap outlet sediment trap may be used for drainage areas of up to a maximum of 10 acres.**

Dry storage is not required in the Rip-rap Outlet Sediment Trap, only excavation for wet storage. The storage required is 5400 cubic feet per acre of drainage area for Rip-rap Outlet Sediment Traps.

Construction Specifications

1. The area under the embankment shall be cleared, grubbed and stripped of any vegetation and root mat. The pool area shall be cleared.

2. The fill material for the embankment shall be free of roots or other woody vegetation as well as over-sized stones, rocks, organic material or other objectionable material. The embankment shall be compacted by traversing with equipment while it is being constructed.

3. All cut and fill slopes shall be 2:1 or flatter.

4. Elevation of the top of any dike directing water into trap must equal or exceed the height of trap embankment.

5. Storage area provided shall be figured by computing the volume measured from top of excavation (For storage requirements see Table 10).

6. Geotextile Class C[15] shall be placed over the bottom and sides of the outlet channel prior to placement of stone. Sections of fabric must overlap at least 1' with section nearest the entrance placed on top. Fabric shall be embedded at least 6" into existing ground at entrance of outlet channel.

7. The outlet channel shall be constructed using 4"- 12" stone, placed 18" thick.

8. Outlet - An outlet shall include a means of conveying the discharge in an erosion free manner to a stable channel. Protection against scour at the discharge point shall be provided as necessary.

9. Outlet channel must have positive drainage from the trap.

10. Sediment shall be removed and trap restored to its original dimensions when the sediment has accumulated to 1/2 of the wet storage depth of the trap. Removed sediment shall be deposited in a suitable area and in such a manner that it will not erode.

11. The structure shall be inspected periodically after each rain and repaired as needed.

[15] Refer to Table 27.

12. Construction of traps shall be carried out in such a manner that sediment pollution is abated. Once constructed, the top and outside face of the embankment shall be stabilized with seed and mulch. Points of concentrated inflow shall be protected in accordance with Grade Stabilization Structure criteria. The remainder of the interior slopes should be stabilized (one time) with seed and mulch upon trap completion and monitored and maintained erosion free during the life of the trap.

13. The structure shall be dewatered by approved methods, removed and the area stabilized when the drainage area has been properly stabilized.

14. For storage requirements see Table 10.

Table 8 Riprap Outlet Sediment Trap

ST-III and IV (for Stone Lined Channel)

Contributing Drainage Area (Acres)	Depth of Channel (a) (Feet)	Width of Weir (b) (Feet)
1	1.5	4.0
2	1.5	5.0
3	1.5	6.0
4	1.5	10.0
5	1.5	12.0
6	1.5	14.0
7	1.5	16.0
8	2.0	10.0
9	2.0	10.0
10	2.0	12.0

DETAIL 10 - RIP-RAP OUTLET SEDIMENT TRAP - ST III

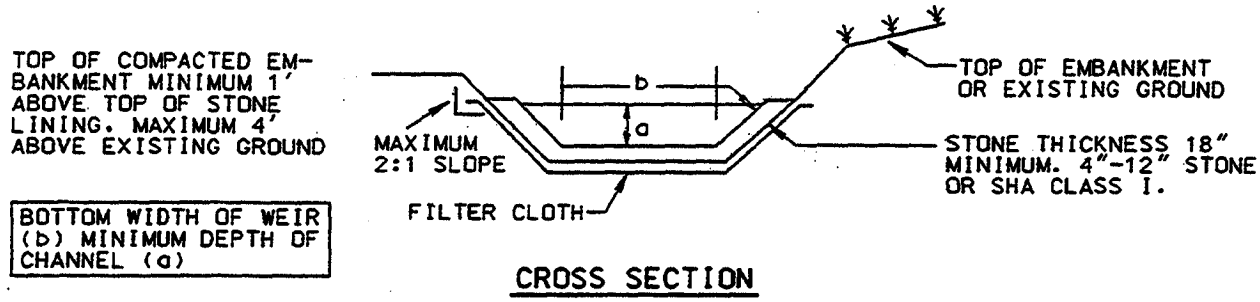

CROSS SECTION

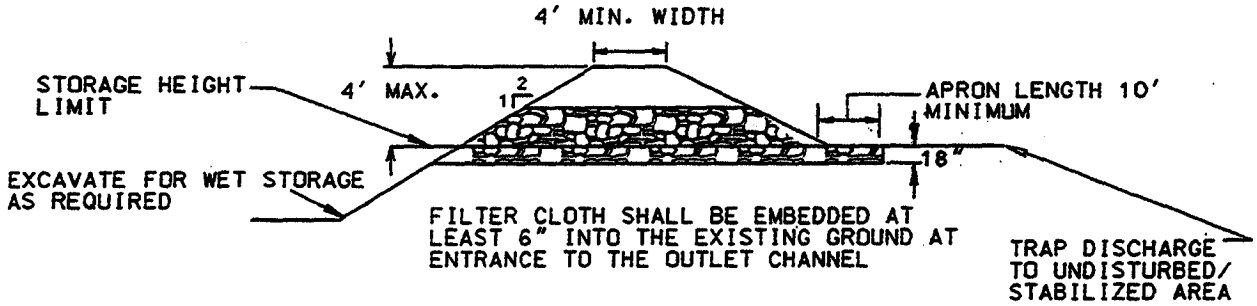

PROFILE

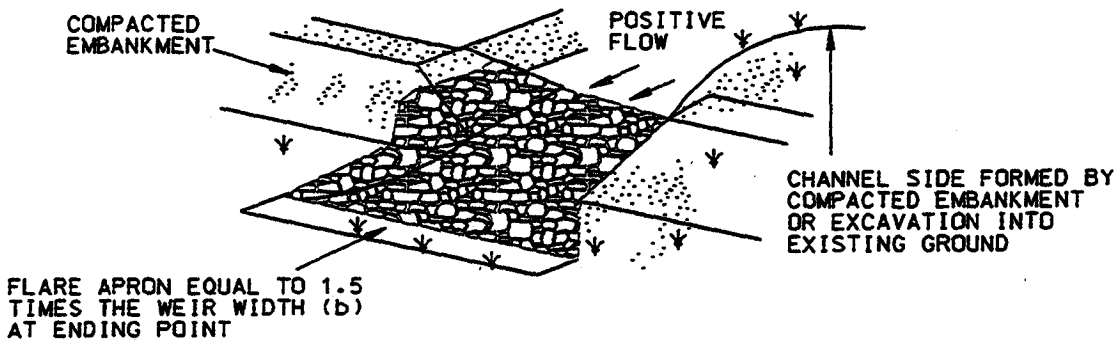

PERSPECTIVE VIEW

NOTE: MAXIMUM DRAINAGE AREA= 10 ac.

RIP-RAP OUTLET SEDIMENT TRAP - ST III

Constuction Specifications

1. The area under embankment shall be cleared, grubbed and stripped of any vegetation and root mat. The pool area shall be cleared.

2. The fill material for the embankment shall be free of roots or other woody vegetation as well as over-sized stones, rocks, organic material or other objectionable material. The embankment shall be compacted by traversing with equipment while it is being constructed. Maximum height of embankment shall be 4', measured at centerline of embankment.

3. All cut and fill slopes shall be 2:1 or flatter.

4. Elevation of the top of any dike directing water into trap must equal or exceed the height of trap embankment.

5. Storage area provided shall be figured by computing the volume measured from top of excavation. (For storage requirements see Table 10).

6. Filter cloth shall be placed over the bottom and sides of the outlet channel prior to placement of stone. Section of fabric must overlap at least 1' with section nearest the entrance placed on top. Fabric shall be embedded at least 6" into existing ground at entrance of outlet channel.

7. Stone used in the outlet channel shall be 4" - 7" placed 18" thick.

8. Outlet - An outlet shall be provided, which includes a means of conveying the discharge in an erosion free manner to an existing stable channel. Protection against scour at the discharge end shall be provided as necessary.

9. Outlet channel must have positive drainage from the trap.

10. Sediment shall be removed and trap restored to its original dimensions when the sediment has accumulated to 1/4 of the wet storage depth of the trap (1350 cf/ac). Removed sediment shall be deposited in a suitable area and in such a manner that it will not erode.

11. The structure shall be inspected periodically after each rain and repaired as needed.

12. Construction of traps shall be carried out in such a manner that sediment pollution is abated. Once constructed, the top and outside face of the embankment shall be stabilized with seed and mulch. Points of concentrated inflow shall be protected in accordance with Grade Stabilization Structure criteria. The remainder of the interior slopes should be stabilized (one time) with seed and mulch upon trap completion and monitored and maintained erosion free during the life of the trap.

13. The structure shall be dewatered by approved methods, removed and the area stabilized when the drainage area has been properly stabilized.

9.4 Stone/Rip-rap Outlet Sediment Trap ST-IV

This practice consists of a trap formed by an excavation and embankment. The outlet for this trap shall be through a partially excavated channel lined with rip-rap and containing a stone or recycled concrete equivalent outlet structure. The outlet shall discharge onto a stabilized area or to a stable watercourse. The stone outlet/rip-rap outlet sediment trap may be used for drainage areas up to a maximum of 10 acres. The outlet of this trap is over a stone section placed in the rip-rap channel. The minimum length weir (feet) of the stone section shall be equal to four (4) times the drainage area (acres). The Detail for ST-II shall be used on the plans for constructing ST-IV with the rip-rap apron length shown.

The outlet crest (top of stone in weir section) shall be level, at least 1' foot below top of embankment and no more than 3' above ground beneath the outlet. 4"- 7" stone shall be used in the weir and 4" - 12" or Class I rip-rap shall be used to construct the outlet. A 1' thick layer of 3/4" - 1 1/2" washed aggregate shall be placed on the upstream face of the outlet. Geotextile Class E or C[16] placed on the upstream face of the outlet may be substituted for the 3/4" - 1 1/2" stone.

Construction Specifications

1. The area under embankment shall be cleared, grubbed and stripped of any vegetation and root mat. The pool area shall be cleared.

2. The fill material for the embankment shall be free of roots or other woody vegetation as well as over-sized stones, rocks, organic material or other objectionable material. The embankment shall be compacted by traversing with equipment while it is being constructed. Maximum height of embankment shall be four (4) feet, measured at centerline of embankment.

3. All cut and fill slopes shall be 2:1 or flatter.

4. Elevation of the top of any dike directing water into trap must equal or exceed the height of trap embankment.

5. Storage area provided shall be figured by computing the volume measured from top of weir. (For storage requirements see Table 9).

6. Geotextile Class C shall be placed over the bottom and sides of the outlet channel prior to placement of stone. Sections of fabric must overlap at least 1' with section nearest the entrance placed on top. Fabric shall be embedded at least 6" into existing ground at entrance of outlet channel.

7. 4"- 7" stone shall be used to construct the weir and 4" to 12" or Class I rip-rap shall be used to construct the outlet channel.

8. Outlet - An outlet shall include a means of conveying the discharge in an erosion free manner to an existing stable channel. Protection against scour at the discharge point shall be provided as necessary.

[16] Refer to Table 27.

9. Outlet channel must have positive drainage away from the trap.

10. Sediment shall be removed and trap restored to its original dimensions when the sediment has accumulated to 1/2 of the wet storage depth of the trap. Removed sediment shall be deposited in a suitable area and in such a manner that it will not erode.

11. The structure shall be inspected periodically after each rain and repaired as needed.

12. Construction of traps shall be carried out in such a manner that sediment pollution is abated. Once constructed, the top and outside face of the embankment shall be stabilized with seed and mulch. Points of concentrated inflow shall be protected in accordance with Grade Stabilization Structure criteria. The remainder of the interior slopes should be stabilized (one time) with seed and mulch upon trap completion and monitored and maintained erosion free during the life of the trap.

13. The structure shall be removed and the area stabilized when the drainage area has been properly stabilized.

DETAIL 10A - STONE / RIP-RAP OUTLET SEDIMENT TRAP - ST IV

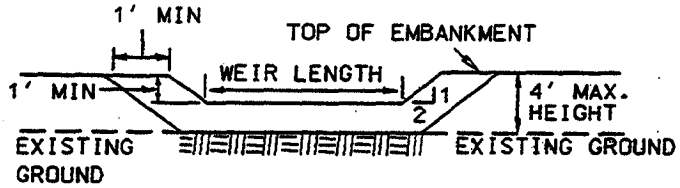

SECTION B-B

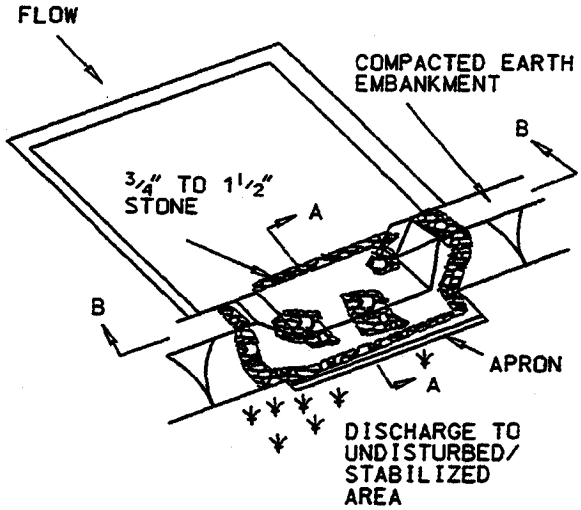

PERSPECTIVE VIEW

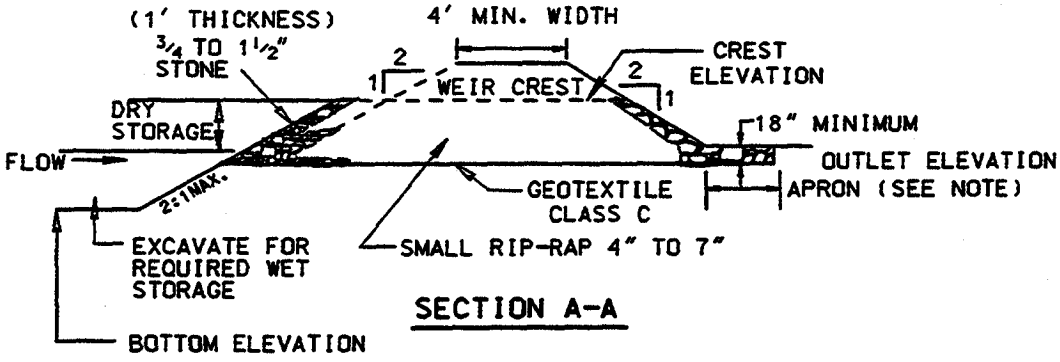

SECTION A-A

NOTE: 5' MIN LENGTH UP TO 5 ACRES. OVER 5 ACRES USE 10' MIN

STONE / RIP-RAP OUTLET SEDIMENT TRAP - ST IV

Constuction Specifications

1. The area under embankment shall be cleared, grubbed and stripped of any vegetation and root mat. The pool area shall be cleared.

2. The fill material for the embankment shall be free of roots or other woody vegetation as well as over-sized stones, rocks, organic material or other objectionable material. The embankment shall be compacted by traversing with equipment while it is being constructed. Maximum height of embankment shall be 4', measured at centerline of embankment.

3. All cut and fill slopes shall be 2:1 or flatter.

4. Elevation of the top of any dike directing water into trap must equal or exceed the height of trap embankment.

5. Storage area provided shall be figured by computing the volume measured from top of excavation. (For storage requirements see Table 9).

6. Geotextile Class C shall be placed over the bottom and sides of the outlet channelprior to placement of stone. Section of fabric must overlap at least 1' with section nearest the entrance placed on top. Fabric shall be embedded at least 6" into existing ground at entrance of outlet channel.

7. 4" - 7" stone shall be used to construct the weir and 4" - 12" or Class I rip-rap shall be used to construct the outlet channel.

8. Outlet - An outlet shall include a means of conveying the discharge in an erosion free manner to an existing stable channel. Protection against scour at the discharge point shall be provided as necessary.

9. Outlet channel must have positive drainage from the trap.

10. Sediment shall be removed and trap restored to its original dimensions when the sediment has accumulated to ½ of the wet storage depth of the trap (900 cf/ac). Removed sediment shall be deposited in a suitable area and in such a manner that it will not erode.

11. The structure shall be inspected periodically after each rain and repaired as needed.

12. Construction of traps shall be carried out in such a manner that sediment pollution is abated. Once constructed, the top and outside face of the embankment shall be stabilized with seed and mulch. Points of concentrated inflow shall be protected in accordance with Grade Stabilization Structure criteria. The remainder of the interior slopes should be stabilized (one time) with seed and mulch upon trap completion and monitored and maintained erosion free during the life of the trap.

13. The structure shall be dewatered by approved methods, removed and the area stabilized when the drainage area has been properly stabilized.

Table 9 Sediment Trap Design Criteria
ST-I, ST-II, ST-IV

DRAINAGE AREA (AC.)	TRAP TYPE*	TOTAL VOLUME (CF)	WET VOLUME (CF)	DRY VOLUME (CF)	MINIMUM DEPTH (FT)	MINIMUM LENGTH (FT)	MINIMUM WIDTH (FT)
1	I/II	3600	1800	1800	2.5	46	23
2	I/II	7200	3600	3600	2.5	68	34
3	I/II	10800	5400	5400	2.5	86	42
4	I/II	14400	7200	7200	3.0	90	43
5	I/II	18000	9000	9000	3.0	101	50
6	IV	21600	10800	10800	4.0	90	46
7	IV	25200	12600	12600	4.0	100	50
8	IV	28800	14400	14400	4.0	105	55
9	IV	32400	16200	16200	4.0	110	60
10	IV	36000	18000	18000	4.0	123	60

*I - PIPE OUTLET (POST), II - STONE OUTLET (SOST), IV - STONE/RIPRAP OUTLET (SROST)

1. The length to width ratio should be 2:1.

2. Minimum length and width dimensions apply to the bottom of the traps.

3. The side slopes will be 2:1 or flatter.

4. If the stone outlet is used in conjunction with rip-rap channel protection then the storage requirement will be 3600 cubic feet per acre. If the stone outlet and rip-rap apron are used, the length of the apron will be a minimum of 10'.

Table 10 Sediment Trap Design Criteria ST-III

DRAINAGE AREA (AC.)	TRAP TYPE*	TOTAL VOLUME (CF)	WET VOLUME (CF)	MINIMUM DEPTH (FT)	MINIMUM LENGTH (FT)	MINIMUM WIDTH (FT)
1	III	5400	5400	2.5	58	29
2	III	10800	10800	2.5	85	42
3	III	16200	16200	2.5	107	53
4	III	21600	21600	3	111	55
5	III	27000	27000	3	125	62
6	III	32400	32400	4	115	57
7	III	37800	37800	4	125	62
8	III	43200	43200	4	135	67
9	III	48600	48600	4	143	72
10	III	54000	54000	4	152	76

* III - RIP-RAP OUTLET (ROST)

1. The length to width ratio should be 2:1.

2. Minimum length and width dimensions apply to the bottom of the traps.

3. The side slopes shall be 2:1 or flatter.

4. See Table 8 for minimum apron length for rip-rap outlet sediment traps.

10.0 STANDARD AND SPECIFICATIONS

FOR

SEDIMENT BASINS

Definition

A temporary barrier or dam constructed across a drainage way or at other suitable locations to intercept sediment laden runoff. This barrier may be combined with excavation to achieve the required storage.

Purpose

Sediment basins protect downstream properties and drainageways by trapping sediment and controlling the release of stormwater runoff.

Wet and Dry Storage

The minimum storage volume requirement for sediment basins is 3600 cubic feet per acre of contributory drainage area. The basin storage volume of 3600 cubic feet per acre shall be divided equally into "dry" or dewatered storage and "wet" or retention storage. Basins shall be dewatered to the wet pool elevation corresponding to 1800 cubic feet of storage per acre of drainage area.

Conditions Where Practice Applies

A sediment basin is required to control runoff and sediment from large areas where sediment traps are not appropriate. Stormwater management ponds may be used as sediment basins provided that they meet the requirements of this section and that the construction sequence addresses converting the sediment basin to the permanent stormwater management pond.

Conditions of Use

This standard applies to the installation of temporary sediment basins on sites where: (a) failure of the structure would not result in loss of life, damage to homes or buildings, or interruption of use or service of public roads or utilities; (b) the drainage area does not exceed 100 acres; (c) the maximum embankment height does not exceed 15 feet measured from the natural ground to the embankment top along the centerline of embankment; and (d) the basin is to be removed within 36 months after the beginning of construction of the basin. Where these criteria cannot be met, the structure shall be designed to conform with the Natural Resources Article, Title 8, Subtitle 8, Annotated Code of Maryland or Maryland SCS Standards and Specifications No. 378 for Ponds. The total volume of permanent sediment basins shall equal or exceed the capacity requirements for temporary basins contained herein.

Design Criteria

Design and construction shall comply with state and local laws, ordinances, rules and regulations.

1. Location The sediment basin should be located to obtain the maximum storage benefit from the terrain and for ease of cleanout of the trapped sediment. It should be located to minimize interference with construction activities and construction of utilities. Whenever possible, sediment basins should be located so that storm drains may outfall or be diverted into the basin.

2. Volume of the Basin The volume of the sediment basin, as measured from the bottom of the basin to the elevation of the principal spillway crest shall be at least 3600 cubic feet per acre of total drainage area (134 cubic yards). This 3600 cubic feet of storage is approximately equal to 1 inch of runoff per acre of drainage area. The sediment basin storage volume of 3600 cubic feet minimum per acre shall be divided equally into "dry" or dewatered storage and "wet" or retention storage. See Basin Draw-Down for dewatering criteria.

Sediment basins shall be cleaned out when the basin is filled with sediment to 900 cf/acre of total drainage area. Cleanout shall be performed to restore the original design volume to the basin. The elevation corresponding to the maximum allowable sediment level shall be determined and shall be stated in the design data as a distance below the top of the riser. The distance between the top of the riser and the cleanout elevation shall be clearly shown on the riser, above the pool elevation.

3. Surface Area Basins shall be designed so that the ratio of acres of surface area to cubic feet/second of discharge (from a 10 year storm) is greater than or equal to 0.0035. The surface area shall be measured at the design high water elevation.

4. Shape of the Basin It is recommended that the designer of a sediment basin strive to incorporate the following features:

a. Length to width ratio greater than 2:1, where length is the distance between the inlet and outlet.

b. A wedge shape with the inlet located at the narrow end.
c. In situations where the above conditions cannot be met, baffles designed to maximize detention time may be required.
d. The dimensions necessary to obtain the required basin volume and surface area shall be clearly shown on the plans to facilitate plan review, construction and inspection.

5. Inflow Protection Whenever the inflow to the basin is not stabilized refer to the inflow protection specifications. Inflow protection provides safe conveyance of concentrated runoff into temporary sediment basins to prevent erosion. Inflow protection shall meet or exceed the practices found in Section B of these Standards and Specifications. Points of runoff entry should be located as far away from the riser as possible, to maximize travel time in conjunction with dikes, swales or other water control devices as warranted by site conditions.

6. Embankment The embankment plans shall include elevations at the top of earth fill at constructed and settled height.

7. Side Slopes The combined upstream and downstream side slopes of the settled embankment shall not be less than five horizontal to one vertical (5:1) with neither slope steeper than 2:1. Slopes must be designed to be stable in all cases.

8. Top Width For dam embankments up to ten (10) feet, the top will be level and a minimum of eight (8) feet in width. For embankments between ten (10) feet and fifteen (15) feet, the top width will be ten (10) feet.

9. Spillway Design Runoff shall be computed by the method outlined in Chapter 2, Estimating Runoff, "Engineering Field Manual for Conservation Practices" available in the Soil Conservation Service offices, or by TR-55, Urban Hydrology. Runoff computations shall be based upon the worst soil-cover conditions expected to prevail in the contributing drainage area during the anticipated effective life of the structure. The combined capacities of the principal and emergency spillways shall be sufficient to pass the "routed" peak rate of runoff from a 10-year frequency storm.

10. Principal Spillway A spillway shall be provided which consists of a vertical pipe or box type riser joined (watertight connection) to a pipe (barrel) which shall extend through the embankment and outlet beyond the downstream toe of the fill . The storage volume required shall be measured from the riser crest elevation to the bottom of the basin. The minimum size of the barrel shall be what is required to pass 10% of the 10 year storm or 8 inches in diameter whichever is larger.

a. Crest elevation The crest elevation of the riser shall be a minimum of one foot below the elevation of the control section of the emergency spillway.

b. Watertight Riser and Barrel Assembly The riser and all pipe connections shall be completely watertight except for the inlet opening at the top or dewatering openings and shall not have any other holes, leaks, rips or perforations.

c. Basin Draw-down The water in the basin from the riser crest to the permanent pool shall be drawn down over a 10 hour period through an internal orifice in a draw-down device. A draw-down device shall be included in the sediment basin plans submitted for approval and shall be installed during construction of the basin. Design of a draw-down device shall be required if an orifice size other than those provided in Table 11 is to be used. Design of perforations in the horizontal or vertical dewatering device is required. Draw-down shall be done in such a manner as to remove the clean water without removing sediment that has settled out or floating debris. This shall be done by constructing a perforated horizontal or vertical draw-down device with an internal orifice to control discharge. If perforating the riser is desired as a draw-down device, the minimum detention time shall be 10 hours, however, the riser must be wrapped with 1/2" hardware cloth and Geotextile Class E or C[17]. Other methods may be used as long as detailed drawings are provided on the approved sediment control plans.

[17] Refer to Table 27.

NOTE: If the basin is to be converted to a stormwater management pond the riser should not be perforated. If PVC pipe is used for the principle spillway then the concrete pipe chart will be used for hydraulic design. Use manufacturer's specification for loading.

d. Anti-vortex Device and Trash Rack An anti-vortex device and trash rack shall be securely installed on top of the riser and shall be the concentric type meeting these specifications for corrugated metal pipe risers and shall meet MD 378 for all others.

e. Base The riser shall have a base attached with a watertight connection and shall have sufficient weight to prevent flotation of the riser. Steel base plates of at least 1/4" thickness shall be twice the diameter of the riser and shall have at least 2' of compacted earth, stone or gravel placed over it to prevent flotation. Concrete riser bases shall be twice the diameter of the riser, a minimum of 18" thick, contain steel reinforcement as shown in Detail 15, and shall have the riser embedded 9" minimum. Risers over 10 feet in height require that anti-floatation calculations be performed and shall be based on the following:

1. The riser shall be analyzed for floatation assuming all orifices and pipes are plugged.

2. The factor of safety against floatation shall be 1.2 or greater.

f. Anti-seep Collars Anti-seep collars shall be installed around all conduits through earth fills of impoundment structures according to the following criteria:

1. Collars shall be placed to increase the seepage length along the conduit by a minimum of 15 percent of the pipe length located within the saturation zone.

2. Collar spacing shall be between 5 and 14 times the vertical projection of each collar.

3. Collars should be placed within the saturation zone. In cases where spacing limit will not allow this, at least one collar shall be placed in the saturation zone.

4. All anti-seep collars and their connections shall be watertight.

5. Anti-seep collars shall be placed a minimum of two feet from pipe joints.

6. Anti-seep collars must have 2' minimum projection.

g. Outlet - An outlet shall be provided, including a means of conveying the discharge in an erosion free manner to an existing stable channel. Where discharge occurs at the property line, drainage easements will be obtained in accordance with local ordinances. Adequate notes and references concerning the easements will be shown on the erosion and sediment control plan. Protection against scour at the discharge end of the pipe spillway shall be provided. See Section 18.0 Standard and Specifications for Rock Outlet Protection.

11. Emergency Spillways The entire flow area of the emergency spillway shall be constructed in undisturbed ground (not fill). The emergency spillway cross-section shall be trapezoidal with a minimum bottom width of eight feet. This spillway channel shall have a straight, level control section of at least 25 feet in length. The exit channel section shall have sufficient slope such that the discharge capacity of the spillway is not hindered in any way and allows the discharge to be released at a non-erosive velocity.

a. Capacity - The minimum capacity of the emergency spillway shall be that required to pass the peak rate of runoff from the 10-year 24-hour duration storm, less any reduction due to flow in the principal spillway. Emergency spillway dimensions may be determined by using the method in Detail 12 and Table 14.

b. Velocities - The velocity of flow in the exit channel shall not exceed 5 feet per second for vegetated channels. For channels with erosion protection other than vegetation, velocities shall be within the non-erosive range for the type of protection used.

c. Freeboard - Freeboard is the difference between the design high water elevation in the emergency spillway and the top of the settled embankment. Freeboard shall be at least one foot.

12. Sediment Disposal The sediment basin plans shall indicate the method(s) of disposing of the sediment removed from the basin. The sediment shall be placed in such a manner that it will not erode from the site. The sediment shall not be deposited downstream from the basin or adjacent to a stream or floodplain. **Disposal sites must be considered in an approved sediment control plan.** The sediment basin plans shall show the method of disposal of the sediment basin after the drainage area is stabilized, and shall include the stabilization of the sediment basin site. **Sediment shall not be allowed to flush into a stream or drainage way.** For dewatering methods see Section D.

Construction Specifications

1. Site Preparation: Perimeter sediment control devices must be installed prior to clearing and grubbing. Areas where the embankment is to be placed shall be cleared, grubbed, and stripped of topsoil to remove trees, vegetation, roots or other objectionable material. The pool area shall not be cleared until completion of the dam embankment unless the pool area is to be used for borrow. In order to facilitate clean-out and restoration, the pool area (measured at the top of the pipe spillway) shall be cleared of all brush, trees, and other objectionable materials.

2. Cut-off Trench: A cut-off trench shall be excavated along the centerline of earth fill embankments. The minimum depth shall be four feet. The cut-off trench shall extend up both abutments to the riser crest elevation. The minimum bottom width shall be two feet, but wide enough to permit operation of excavation and compaction equipment. The side slopes shall be no steeper than 1:1. Compaction requirements shall be the same as those for the embankment. The trench shall be dewatered during the backfilling-compaction operations. For dewatering see Section D.

3. Embankment: The fill material shall be taken from approved areas shown on the plans. It shall be clean mineral soil free of roots, woody vegetation, oversized stones, rocks, or other objectionable material. Relatively pervious materials such as sand or gravel (Unified Soil Classes GW, GP, SW & SP) or organic materials (Unified Soil Classes OL and OH) shall not be placed in the embankment. Areas on which fill is to be placed shall be scarified prior to placement of fill. The fill material shall contain sufficient moisture so that it can be formed by hand into a ball without crumbling. If water can be squeezed out of the ball, it is too wet for proper compaction. Fill material shall be placed in six-inch to eight-inch thick continuous lifts over the entire length of the fill. Compaction shall be obtained by routing and hauling the construction equipment over the fill so that the entire surface of each layer of the fill is traversed by at least one wheel or tread track of the equipment or by the use of a compactor. **The embankment shall be constructed to an elevation 10 percent higher than the design height to allow for settlement.**

4. Principal Spillway: Steel risers shall be securely attached to the barrel or barrel stub by welding the full circumference making a watertight structural connection. Concrete risers shall be poured with the principal spillway in place or precast with voids around the principal spillway filled with concrete or shrink proof grout for watertight connection. The barrel stub must be attached to the riser at the same percent (angle) of grade as the outlet conduit. The connection between the riser and the riser base shall be watertight. All connections between barrel sections must be achieved by approved watertight band assemblies. The barrel and riser shall be placed on a firm, smooth foundation of impervious soil as the embankment is constructed. **Breaching the embankment to install the barrel is unacceptable.** Pervious materials such as sand, gravel, or crushed stone shall not be used as backfill around the pipe or anti-seep collars. The fill material around the pipe spillway shall be placed in four inch lifts and hand compacted under and around the pipe to at least the same density as the adjacent embankment. A depth of 1.5 times the pipe diameter (min.) shall be backfilled over the principal spillway and hand compacted before crossing it with construction equipment.

5. Emergency Spillway: **The emergency spillway shall be installed in undisturbed ground.** The achievement of planned elevations, grades, design width, entrance and exit channel slopes are critical to the successful operation of the emergency spillway and must be constructed within a tolerance of $\pm$ 0.2 feet.

6. Vegetative Treatment: Stabilize the embankment in accordance with the appropriate vegetative Standard and Specifications immediately following construction. In no case shall the embankment remain unstabilized for more than seven (7) days. Once constructed, the top and outside face of the embankment shall be stabilized with seed and mulch. The remainder of the interior slopes should be stabilized (one time) with seed and mulch upon basin completion and monitored and maintained erosion free during the life of the basin.

7. Safety: Local requirements concerning fencing and signs shall be met, warning the public of hazards of soft sediment and floodwater.

8. Maintenance: Repair all damage caused by soil erosion and construction equipment at or before the end of each working day. Sediment shall be removed from the basin when it reaches the specified distance below the top of the riser as shown on the riser. This sediment shall be placed in such a manner that it will not erode from the site. The sediment shall not be deposited downstream from the embankment, adjacent to a stream or floodplain. Disposal areas must be stabilized.

9. Final Disposal: When temporary structures have served their intended purpose and the contributing drainage area has been properly stabilized, the embankment and resulting sediment deposits are to be leveled or otherwise disposed of in accordance with the approved sediment control plan. The proposed use of a sediment basin site will often dictate final disposition of the basin and any sediment contained therein. If the site is scheduled for future construction, then the basin material and trapped sediments must be removed and safely disposed of and the basin shall be backfilled with a structural fill. When the basin area is to remain open space, the pond may be pumped dry (using methods in Section D - Dewatering), graded, and back filled.

10. Conversion to Stormwater Management Structure: After permanent stabilization of all disturbed contributory drainage areas, temporary sediment basins, if initially built and certified to meet permanent standards, may be converted to permanent stormwater management structures. To convert the basin from temporary to permanent use, the outlet structure must be modified in accordance with approved stormwater management design plans. Additional grading may also be necessary to provide the required storage volume in the basin. **Conversion can only take place after all disturbed areas have been permanently stabilized to the satisfaction of the inspection authority and storm drains have been flushed.**

INFORMATION TO BE SUBMITTED

Sediment basin designs and construction plans submitted for review to the Soil Conservation District or other agencies shall include the following:

1. Sediment controls necessary for the installation of the basin.

2. Specific location of the basin.

3. Plan view of the basin and emergency spillway showing existing and proposed contours.

4. Cross section of dam, including elevations at the top of earth fill at constructed and settled height, principal spillway and emergency spillway; profile of emergency spillway.

5. Details of pipe connections, riser to pipe connections, riser base, anti-seep collars, trash rack, cleanout elevation, and anti-vortex device.

6. Runoff calculations for the 10-year frequency storm assuming worst soil conditions.

7. Storage Computation

   a. Total volume required including volumes of "wet" and "dry" storage.

   b. Total volume provided including volumes of "wet" and "dry" storage.

   c. Level of sediment at which cleanout shall be required, stated as a distance from the riser crest to the sediment surface.

8. Calculations showing design of pipe and emergency spillways.

9. Maintenance equipment access points.

10. Dewatering method (sump pit, etc.).

11. Bottom dimensions of basins.

12. Drainage Area Map clearly showing the maximum contributory drainage area to reach the basin.

13. Other information as required by the approval agency.

Bibliography

Hoan, CT., Tapp, J.S. "Design of Sedimentation Basins," NCHRP Synthesis of Highway Practices (1980) Ware, A.D.,

Institute of Mining and Minerals Research, The Deposits Sedimentation Pond Design Manual, Lexington 1979, University of Kentucky.

Barfield, Billy J. and Clar, Michael L., Development of New Design Criteria for Sediment Traps and Basins. 1985.

Figure 2 Temporary Sediment Basin Design Data Sheet

Computed by:_____ Date: _____ Checked by: ____ Date: _____

Project name:_____ Basin #: _____

Location:_____

_____

Total area draining to basin: _____ acres (ac)

Basin Volume Design

Note: 1. Also see Surface Area Design #30, this form.

2. To convert ft^3 to yd^3, divide ft^3 by 27. To convert ft^2 to yd^2, divide ft^2 by 9.

1. Min. required vol. = 3600 ft^3/ac x _____ ac. drainage = _____ ft^3
2. Actual Volume of basin = _____ ft^3
3. Excavate _____ ft^3 (_____ yd^3) to obtain required capacity.
4. Vol. at dewatering elev. = 1800 ft^3/ac x _____ ac. = _____ ft^3
5. Vol. of basin at cleanout = 900 ft^3/ac x _____ ac. = _____ ft^3
6. Elevation corresponding to min. required volume of basin (riser crest elevation) _____ ft.
7. Permanent pool elevation _____ ft.
8. Distance from riser crest elevation to permanent pool elevation _____ ft.
9. Basin cleanout elevation _____ ft.
10. Distance from riser crest elevation to cleanout elevation_____ ft.

Spillway Design

11. Q_{10} = _____cfs (peak discharge from 10-yr, 24-hr storm event, attach computations)

Principal Spillway (Qps) (See Detail 11)

12. Design Principal Spillway (Barrel) discharge, Design Q_{ps} = _____ cfs (min. 10% of 10 year peak or 8" Diameter Pipe)
13. H = _____ ft.; Barrel length = _____ ft.
14. Barrel Diam. _____ in. Note: Q_{ps} must equal or exceed Design Q_{ps}
    Q_{ps} = Q (from Table 13 or 14) _____ x (length correction factor) _____ = _____ cfs.
15. Riser Diameter _____ in.; Riser Height _____ ft.; Riser Head (h) = _____ ft.
16. Trash Rack Diam. _____ in.; Trash Rack Height = _____ in.

NOTE: A table showing design data shall be included on the plan for each basin.

Emergency Spillway (Qes)

17. Emergency spillway cap., $Q_{es} = Q_{10} - Q_{ps}$ =_____ -_____ =_____cfs
18. Width _____ ft; Hp _____ft
19. Entrance channel slope _____%.
20. Exit channel slope _____%.

Anti-Seep Collar Design (If Required)

21. y = _____ ft.; z =_____:1; pipe slope = _____ %; Ls = _____ ft
22. Use _____ collars, _____ ft. - _____ in. square; projection = _____ ft.

Design Elevations

23. Riser Crest =_____ ft.
24. Design High Water =_____ft.
25. Emergency Spillway Crest =_____ ft.
26. Min. settled top of dam =_____ ft.
27. Permanent pool =_____ ft.
28. Bottom of Basin =_____ ft.
29. Draw-down orifice invert =_____ ft.

Surface Area Design

30. Min.basin surface area; SA $\geq$ 0.0035 x Q_{10} = 0.0035 x _____ cfs $\leq$ _____ac.

Draw-down Device

31. Draw-down device orifice diameter = _____ in. (From Table 11)
32. A_t = Total area of perforations $\geq 4A_o$

    A_t= (# of perforation/foot)(perforation area ft^2)(perforated section length ft.)

    A_t= _____ft^2

A_o = Internal orifice area (from Table 11 or computed)

Table 11 Draw-down Device
Orifice Area and Diameter

Drainage Area (acres)	Maximum Orifice Diameter (d_o)	Maximum Orifice Area (A_o)
5-10	4"	0.087 ft^2
10-20	6"	0.20 ft^2
20-40	8"	0.34 ft^2
40-60	10"	0.55 ft^2
60-80	12"	0.79 ft^2
80-100	14"	1.07 ft^2

Draw-down Device Equations

$$Q_{d\text{-}d}\ (\text{cfs}) = \frac{(1800\ \text{cf/acre})(\text{number of acres})}{(10\ \text{hours})(3600\ \text{seconds/hour})}$$

$$A_o = \frac{Q_{d\text{-}d}}{C\sqrt{2gh_{d\text{-}d}}} \qquad d_o = \sqrt{\frac{4A_o}{\pi}}$$

$h_{d\text{-}d}$ = 2/3 (Riser Crest Elevation - Wet Storage Elevation)
C = Constant = 0.6
A_o = Internal Orifice Area ($ft.^2$)
π = Constant = 3.142
d_o = Maximum Orifice Diameter
g = Gravitational Constant = 32.166 ft/s^2

TEMPORARY SEDIMENT BASIN DESIGN DATA SHEET
INSTRUCTIONS FOR USE OF FORM

1. The minimum required volume of storage is 3600 cubic feet per acre (ft^3/ac) of drainage area. Compute the volume of basin storage using the *entire* drainage area. Do not estimate storage based only on disturbed area.

2. The volume of a naturally shaped basin (no excavation) may be approximated by the formula Volume = 0.4 Ad, where Volume is in ft^3, A is the surface area of the basin in square feet (ft^2), and d is the maximum depth of the basin in feet (ft.). Volume may be computed from contour information or other suitable methods.

3. If the volume of the basin is not adequate for the required storage, excavate to obtain the required volume.

4. The volume of the basin for a permanent pool is 1800 ft^3/ac from each acre of drainage area. The basin is dewatered to this permanent pool elevation and volume through the draw-down device.

5. The volume of the basin for cleanout of settled sediment is 900 ft^3/ac for each acre of drainage area. As the basin fills with sediment to this volume, the sediment shall be removed to restore the original design volume.

6. Determine the design elevation for the minimum required storage volume of the basin. The design elevation is set at the riser crest to provide the required 3600 ft^3/ac of drainage area.

7. Determine the design elevation of the permanent pool level. The basin shall be dewatered to this elevation using a draw-down device or perforations in the riser. The design elevation of the permanent pool corresponds to 1800 ft^3/ac of volume. The size of the internal orifice governs the discharges between the riser crest and permanent pool elevations, with the draw-down time being 10 hours (minimum).

8. Subtract the permanent pool elevation from the riser crest elevation.

9. Determine the elevation of basin cleanout, storage corresponding to 900 ft^3/ac.

10. Subtract the cleanout elevation from the riser crest elevation. The distance (ft.) between the riser crest elevation and cleanout elevation shall be clearly shown on the riser.

11. The peak discharge rate is computed for a 10-year, 24-hour storm event using approved SCS methods (Q_{10}) assuming worst soil cover conditions.

12. The minimum principal spillway discharge capacity (Q_{ps}) under H(ft) head shall be the discharge through an 8" pipe or 10 percent of Q_{10}, whichever is greater.

NOTE: If there is no emergency spillway then $Q_{ps} = Q_{10}$.

13. "H" is the distance in feet between the centerline of the outlet pipe and the emergency spillway crest. Determine the length of the barrel.

14. Determine the barrel diameter for Q_{ps} using the Pipe Spillway Design Charts.

15. Determine the riser diameter, length, and "h" to release the principal spillway discharge using the solid lines on Table 15. The riser crest should be set (minimum) 1 foot below the emergency spillway (See Detail 11).

16. Determine the trash rack and anti-vortex device size using Detail 16.

17. Compute the capacity required for the emergency spillway capacity (Q_{es}) by subtracting the actual flow carried by the principal spillway from Q_{10}.

18. Using Table 14 and Detail 12, determine values of Hp and bottom width for the emergency spillway.

19. Determine the entrance channel slope.

20. Determine the exit channel slope.

21. Determine the anti-seep collar design. (See Table 16 and Detail 13).

22. Determine the number of anti-seep collars to use.

23. Determine the design elevation of the riser crest.

24. Design high water is the elevation of the emergency spillway crest plus the value of Hp.

25. Determine the design elevation of the emergency spillway.

26. The minimum settled top of dam elevation requires 1.0 ft. of freeboard above design high water. The minimum constructed top of dam elevation shall include a 10% increase in height to allow for settlement.

27. Determine the elevation where 1/2 of the total storage volume is attained. This elevation, known as the permanent pool elevation, is also the invert elevation of the basin draw-down device.

28. Fill in the basin bottom elevation.

29. Fill in the draw-down orifice invert. For a horizontal draw-down device this elevation should be the same as the permanent pool elevation.

30. Compute the minimum basin surface area using the equation given on the Sediment Basin Design Data Sheet and Q_{10}.

31. Choose a basin draw-down orifice size from the Table 11 or design one using the parameters given.

32. Using orifice area from Table 11, or calculations, and a maximum perforation diameter of 1" (0.0055 ft^2 area), determine the length of pipe required to provide sufficient perforations so that the area of perforations (total) is greater than or equal to four times the internal orifice area.

Table 12 Corrugater' [illegible]al Pipe Inlet Flow Chart

70 Feet of Corrugated Meta[illegible]e Conduit $K_m = K_e + K_b = 1.00$

(Full Flow Assumed, n=0.025, Diameter of Pipe in Inches, H in Feet)

H	6"	8"	10"	12"	15"	18"	21"	24"	30"	36"	42"	48"	54"	60"	66"	72"
1'	0.33	0.70	1.25	1.98	3.48	5.47	7.99	11.0	18.8	28.8	41.1	55.7	72.6	91.8	113	137
2'	0.47	0.99	1.76	2.80	4.92	7.74	11.3	15.6	26.6	40.8	58.2	78.8	103	130	160	194
3'	0.58	1.22	2.16	3.43	6.02	9.48	13.8	19.1	32.6	49.9	71.2	96.5	126	159	196	237
4'	0.67	1.40	2.49	3.97	6.96	10.9	16.0	22.1	37.6	57.7	82.3	111	145	184	226	274
5'	0.74	1.57	2.79	4.43	7.78	12.2	17.9	24.7	42.1	64.5	92.0	125	162	205	253	306
6'	0.82	1.72	3.05	4.86	8.52	13.4	19.6	27.0	46.1	70.6	101	136	178	225	277	336
7'	0.88	1.86	3.30	5.25	9.20	14.5	21.1	29.2	49.8	76.3	109	147	192	243	300	362
8'	0.94	1.99	3.53	5.61	9.84	15.5	22.6	31.2	53.2	81.5	116	158	205	260	320	388
9'	1.00	2.11	3.74	5.95	10.4	16.4	24.0	33.1	56.4	86.5	123	167	218	275	340	411
10'	1.05	2.22	3.94	6.27	11.0	17.3	25.3	34.9	59.5	91.2	130	176	230	290	358	433
11'	1.10	2.33	4.13	6.58	11.5	18.2	26.5	36.6	62.4	95.6	136	185	241	304	376	454
12'	1.15	2.43	4.32	6.87	12.1	19.0	27.7	38.2	65.2	99.9	142	193	252	318	392	475
13'	1.20	2.53	4.49	7.15	12.6	19.7	28.8	39.8	67.8	104	148	201	262	331	408	494
14'	1.25	2.63	4.66	7.42	13.0	20.5	29.9	41.3	70.4	108	154	208	272	343	424	513
15'	1.29	2.72	4.83	7.68	13.5	21.2	30.9	42.8	72.8	112	159	216	281	355	439	531

Correction Factors for Other Pipe Lengths

L (ft)																
20	1.69	1.63	1.58	1.53	1.47	1.42	1.37	1.34	1.28	1.24	1.20	1.18	1.16	1.14	1.13	1.11
30	1.44	1.41	1.39	1.36	1.32	1.29	1.27	1.24	1.21	1.18	1.15	1.13	1.12	1.11	1.10	1.09
40	1.28	1.27	1.25	1.23	1.21	1.20	1.18	1.17	1.14	1.12	1.11	1.10	1.09	1.08	1.07	1.06
50	1.16	1.16	1.15	1.14	1.13	1.12	1.11	1.10	1.09	1.08	1.07	1.06	1.06	1.05	1.05	1.04
60	1.07	1.07	1.07	1.06	1.06	1.05	1.05	1.05	1.04	1.04	1.03	1.03	1.03	1.02	1.02	1.02
70	1.00	1.00	1.00	1.00	1.00	1.00	1.00	1.00	1.00	1.00	1.00	1.00	1.00	1.00	1.00	1.00
80	.94	.94	.95	.95	.95	.95	.96	.96	.96	.97	.97	.97	.98	.98	.98	.98
90	.89	.89	.90	.90	.91	.91	.92	.92	.93	.94	.94	.95	.95	.96	.96	.96
100	.85	.85	.86	.86	.87	.88	.89	.89	.90	.91	.92	.93	.93	.94	.94	.95
120	.78	.79	.79	.80	.81	.82	.83	.83	.85	.86	.87	.89	.89	.90	.91	.92
140	.72	.73	.74	.75	.76	.77	.78	.79	.81	.82	.84	.85	.86	.87	.88	.89
160	.68	.69	.69	.70	.71	.73	.74	.75	.77	.79	.80	.82	.83	.84	.85	.86

Table 13 Reinforced Concrete Pipe Inlet Flow Chart

70 Feet of Reinforced Concrete Pipe Conduit $K_m = K_e + K_b = 1.00$

(Full Flow Assumed, n=0.013, Diameter of Pipe in Inches, H in Feet)

HD	12"	15"	18"	21"	24"	30"	36"	42"	48"	54"	60"	66"	72"	78"	84"	90"	96"	102"
1'	3.08	5.17	7.83	11.1	14.9	24.2	35.8	49.7	65.8	84.2	105	128	153	180	210	242	276	312
2'	4.35	7.31	11.1	15.7	21.0	34.2	50.6	70.3	93.1	119	148	181	216	255	297	342	390	441
3'	5.33	8.95	13.6	19.2	25.8	41.9	62.0	86.1	114	146	182	221	265	312	363	419	478	541
4'	6.15	10.3	15.7	22.1	29.8	48.4	71.6	99.4	132	168	210	255	306	360	420	483	552	624
5'	6.88	11.6	17.5	24.7	33.3	54.1	80.1	111	147	188	234	286	342	403	469	540	617	698
6'	7.54	12.7	19.2	27.1	36.4	59.3	87.7	122	161	206	257	313	374	441	514	592	676	765
7'	8.14	13.7	20.7	29.3	39.4	64.0	94.8	131	174	223	277	338	404	477	555	640	730	826
8'	8.70	14.6	22.2	31.3	42.1	68.5	101	141	186	238	297	361	432	510	594	684	780	883
9'	9.23	15.5	23.5	33.2	44.6	72.6	107	149	197	253	315	383	459	541	630	725	827	936
10'	9.73	16.3	24.8	35.0	47.0	76.5	113	157	208	266	332	404	483	570	664	764	872	987
11'	10.2	17.1	26.0	36.7	49.3	80.3	119	165	218	279	348	424	507	598	696	802	9151	1035
12'	10.7	17.9	27.1	38.3	51.5	83.9	124	172	228	292	363	442	530	624	727	837	9555	1081
13'	11.1	18.6	28.2	39.9	53.6	87.3	129	179	237	304	378	461	551	650	757	872	9948	1125
14'	11.5	19.3	29.3	41.4	55.7	90.6	134	186	246	315	392	478	572	674	785	904	1032	1168
15'	11.9	20.0	30.3	42.9	57.6	93.8	139	192	255	326	406	495	592	698	813	9364	1068	1209

Correction Factors for Other Pipe Lengths

L (ft)																		
20	1.30	1.24	1.21	1.18	1.15	1.12	1.10	1.08	1.07	1.06	1.05	1.05	1.04	1.04	1.03	1.03	1.03	1.03
30	1.22	1.18	1.15	1.13	1.12	1.09	1.08	1.07	1.05	1.05	1.04	1.04	1.03	1.03	1.03	1.02	1.02	1.02
40	1.15	1.13	1.11	1.10	1.08	1.07	1.05	1.05	1.04	1.03	1.03	1.03	1.02	1.02	1.02	1.02	1.02	1.02
50	1.09	1.08	1.07	1.06	1.05	1.04	1.04	1.03	1.03	1.02	1.02	1.02	1.02	1.01	1.01	1.01	1.01	1.01
60	1.04	1.04	1.03	1.03	1.03	1.02	1.02	1.02	1.01	1.01	1.01	1.01	1.01	1.01	1.01	1.01	1.01	1.01
70	1.00	1.00	1.00	1.00	1.00	1.00	1.00	1.00	1.001	1.00	1.00	1.00	1.00	1.00	1.00	1.00	1.00	1.00
80	.96	.97	.97	.97	.98	.98	.98	.99	.99	.99	.99	.99	.99	.99	.99	.99	.99	.99
90	.93	.94	.94	.95	.95	.96	.97	.97	.98	.98	.98	.98	.98	.99	.99	.99	.99	.99
100	.90	.91	.92	.93	.93	.95	.95	.96	.97	.97	.97	.98	.98	.98	.98	.98	.98	.99
120	.84	.86	.87	.89	.90	.91	.93	.94	.94	.95	.96	.96	.96	.97	.97	.97	.97	.98
140	.80	.82	.83	.85	.86	.88	.90	.91	.92	.93	.94	.94	.95	.95	.96	.96	.96	.97
160	.76	.78	.80	.82	.83	.86	.88	.89	.90	.91	.92	.93	.94	.94	.95	.95	.95	.96

Table 14

DESIGN DATA FOR EARTH SPILLWAYS

STAGE (Hp) IN FEET	SPILLWAY VARIABLES	BOTTOM WIDTH (b) IN FEET																
		8	10	12	14	16	18	20	22	24	26	28	30	32	34	36	38	40
0.5	Q	6	7	8	10	11	13	14	15	17	18	20	21	22	24	25	27	28
	V	2.7	2.7	2.7	2.7	2.7	2.7	2.7	2.7	2.7	2.7	2.7	2.7	2.7	2.7	2.7	2.7	2.7
	S	3.9	3.9	3.9	3.9	3.8	3.8	3.8	3.8	3.8	3.8	3.8	3.8	3.8	3.8	3.8	3.8	3.8
0.6	Q	8	10	12	14	16	18	20	22	24	26	28	30	32	34	35	37	39
	V	3.0	3.0	3.0	3.0	3.0	3.0	3.0	3.0	3.0	3.0	3.0	3.0	3.0	3.0	3.0	3.0	3.0
	S	3.7	3.7	3.7	3.7	3.6	3.7	3.6	3.6	3.6	3.6	3.6	3.6	3.6	3.6	3.6	3.6	3.6
0.7	Q	11	13	16	18	20	23	25	28	30	33	35	38	41	43	44	46	48
	V	3.2	3.2	3.3	3.3	3.3	3.3	3.3	3.3	3.3	3.3	3.3	3.3	3.3	3.3	3.3	3.3	3.3
	S	3.5	3.5	3.4	3.4	3.4	3.4	3.4	3.4	3.4	3.4	3.4	3.4	3.4	3.4	3.4	3.4	3.4
0.8	Q	13	16	19	22	26	29	32	35	38	42	45	48	48	51	54	57	60
	V	3.5	3.5	3.5	3.6	3.6	3.6	3.6	3.6	3.6	3.6	3.6	3.6	3.6	3.6	3.6	3.6	3.6
	S	3.3	3.3	3.3	3.2	3.2	3.2	3.2	3.2	3.2	3.2	3.2	3.2	3.2	3.2	3.2	3.2	3.2
0.9	Q	17	20	24	28	32	35	39	43	47	51	53	57	60	64	68	71	75
	V	3.7	3.8	3.8	3.8	3.8	3.8	3.8	3.8	3.8	3.8	3.8	3.8	3.8	3.8	3.8	3.8	3.8
	S	3.2	3.1	3.1	3.1	3.1	3.1	3.1	3.1	3.1	3.1	3.1	3.1	3.1	3.1	3.1	3.1	3.1
1.0	Q	20	24	29	33	38	42	47	51	56	61	63	68	72	77	81	86	90
	V	4.0	4.0	4.0	4.0	4.0	4.0	4.0	4.0	4.0	4.0	4.0	4.0	4.0	4.0	4.0	4.0	4.0
	S	3.1	3.0	3.0	3.0	3.0	3.0	3.0	3.0	3.0	3.0	3.0	3.0	3.0	3.0	3.0	3.0	3.0
1.1	Q	23	28	34	39	44	49	54	60	65	70	74	79	84	89	95	100	105
	V	4.2	4.2	4.2	4.3	4.3	4.3	4.3	4.3	4.3	4.3	4.3	4.3	4.3	4.3	4.3	4.3	4.3
	S	2.9	2.9	2.9	2.9	2.9	2.9	2.9	2.9	2.9	2.8	2.8	2.8	2.8	2.8	2.8	2.8	2.8
1.2	Q	28	35	40	45	51	58	64	69	76	80	86	92	98	104	110	116	122
	V	4.4	4.4	4.4	4.4	4.4	4.5	4.5	4.5	4.5	4.5	4.5	4.5	4.5	4.5	4.5	4.5	4.5
	S	2.9	2.9	2.8	2.8	2.8	2.8	2.8	2.8	2.8	2.8	2.8	2.8	2.8	2.8	2.8	2.8	2.8
1.3	Q	32	38	46	53	59	65	73	80	86	91	99	106	112	119	125	133	140
	V	4.5	4.6	4.6	4.6	4.6	4.6	4.7	4.7	4.7	4.7	4.7	4.7	4.7	4.7	4.7	4.7	4.7
	S	2.8	2.8	2.8	2.7	2.7	2.7	2.7	2.7	2.7	2.7	2.7	2.7	2.7	2.7	2.7	2.7	2.7
1.4	Q	37	44	51	59	66	74	82	90	96	103	111	119	127	134	142	150	158
	V	4.7	4.8	4.8	4.8	4.8	4.8	4.8	4.8	4.8	4.9	4.9	4.9	4.9	4.9	4.9	4.9	4.9
	S	2.8	2.7	2.7	2.7	2.7	2.7	2.7	2.6	2.6	2.6	2.6	2.6	2.6	2.6	2.6	2.6	2.6
1.5	Q	41	50	58	66	75	85	92	101	108	116	125	133	142	150	160	169	178
	V	4.8	4.9	4.9	5.0	5.0	5.0	5.0	5.0	5.0	5.0	5.0	5.0	5.0	5.0	5.1	5.1	5.1
	S	2.7	2.7	2.6	2.6	2.6	2.6	2.6	2.6	2.6	2.6	2.6	2.6	2.6	2.6	2.5	2.5	2.5
1.6	Q	46	56	65	75	84	94	104	112	122	132	142	149	158	168	178	187	197
	V	5.0	5.1	5.1	5.1	5.1	5.2	5.2	5.2	5.2	5.2	5.2	5.2	5.2	5.2	5.2	5.2	5.2
	S	2.6	2.6	2.6	2.6	2.5	2.5	2.5	2.5	2.5	2.5	2.5	2.5	2.5	2.5	2.5	2.5	2.5
1.7	Q	52	62	72	83	94	105	115	126	135	146	156	167	175	187	196	206	217
	V	5.2	5.2	5.2	5.3	5.3	5.3	5.3	5.4	5.4	5.4	5.4	5.4	5.4	5.4	5.4	5.4	5.4
	S	2.6	2.6	2.5	2.5	2.5	2.5	2.5	2.5	2.5	2.5	2.5	2.5	2.5	2.5	2.5	2.5	2.5
1.8	Q	58	69	81	93	104	116	127	138	150	160	171	182	194	204	214	226	233
	V	5.3	5.4	5.4	5.5	5.5	5.5	5.5	5.5	5.5	5.5	5.5	5.6	5.6	5.6	5.6	5.6	5.6
	S	2.5	2.5	2.5	2.5	2.4	2.4	2.4	2.4	2.4	2.4	2.4	2.4	2.4	2.4	2.4	2.4	2.4
1.9	Q	64	76	88	102	114	127	140	152	164	175	188	201	213	225	235	248	260
	V	5.5	5.5	5.5	5.6	5.6	5.6	5.7	5.7	5.7	5.7	5.7	5.7	5.7	5.7	5.7	5.7	5.7
	S	2.5	2.5	2.5	2.4	2.4	2.4	2.4	2.4	2.4	2.4	2.4	2.4	2.4	2.4	2.4	2.4	2.4
2.0	Q	71	83	97	111	125	138	153	164	178	193	204	218	232	245	256	269	283
	V	5.6	5.7	5.7	5.7	5.8	5.8	5.8	5.8	5.8	5.8	5.8	5.9	5.9	5.9	5.9	5.9	5.9
	S	2.5	2.4	2.4	2.4	2.4	2.4	2.4	2.4	2.3	2.3	2.3	2.3	2.3	2.3	2.3	2.3	2.3
2.1	Q	77	91	107	122	135	149	162	177	192	207	220	234	250	267	276	291	305
	V	5.7	5.8	5.9	5.9	5.9	5.9	5.9	6.0	6.0	6.0	6.0	6.0	6.0	6.0	6.0	6.0	6.0
	S	2.4	2.4	2.4	2.4	2.4	2.3	2.3	2.3	2.3	2.3	2.3	2.3	2.3	2.3	2.3	2.3	2.3

DATA TO RIGHT OF HEAVY VERTICAL LINES SHOULD BE USED WITH CAUTION, AS THE RESULTING SECTIONS WILL BE EITHER POORLY PROPORTIONED, OR HAVE VELOCITIES IN EXCESS OF 6 FEET PER SECOND.

Source: USDA-SCS

Table 15

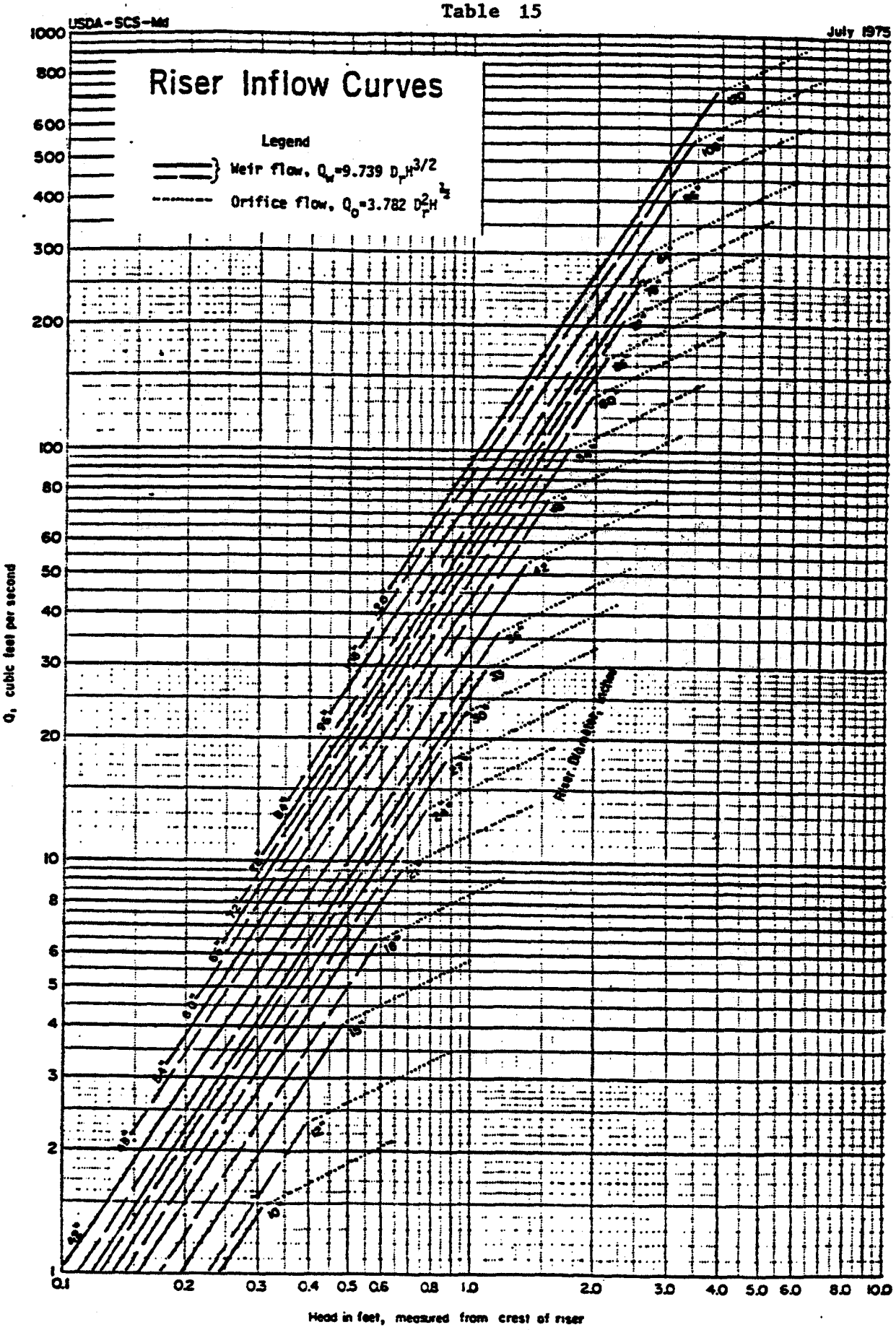
USDA-SCS-MI
July 1975
Riser Inflow Curves
Legend
Weir flow, $Q_w = 9.739\ D_r H^{3/2}$
Orifice flow, $Q_o = 3.782\ D_r^2 H^{1/2}$
Riser Diameter, inches
Q, cubic feet per second
Head in feet, measured from crest of riser

DETAIL 11 - PIPE SPILLWAY DESIGN

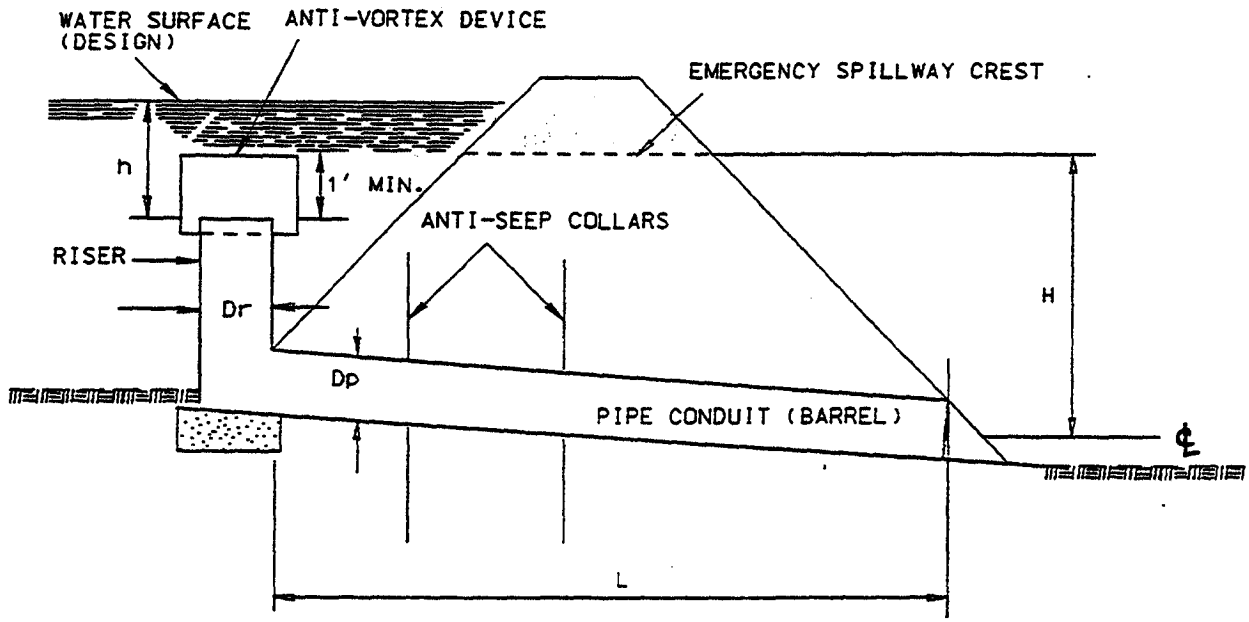

H= Head on pipe spillway (pipe flow), feet (centerline of outlet to emergency spillway crest or to design high water if no emergency spillway).
h= Head over riser crest, in feet.
L= Length of pipe in feet.
Dp= Diameter of pipe conduit (barrel).
Dr= Diameter of riser.

CHART USE INSTRUCTIONS

1. Enter chart, Table 13 or Table 14 with H and required discharge.
2. Find the diameter of the pipe conduit that provides equal or greater discharge.
3. Enter chart, Table 12, with actual pipe discharge.
4. Read across chart to select the smallest riser that provides discharge within the weir flow portion of the rating curve.
5. Read down the chart to find the corresponding h required.

EXAMPLE

Given: Q (required) = 5.8 cfs
L= 60'
H= 9' to centerline of pipe= Free outlet

Find: Pipe size, actual Q and size of riser.
Q of 12" pipe= 6.0 cfs. x (correction factor) 1.07= 6.4 cfs. from the Pipe Flow Chart.
From Riser Inflow Curves, smallest riser= 18" (@ H= 0.6)

DETAIL 12 - EMERGENCY SPILLWAY

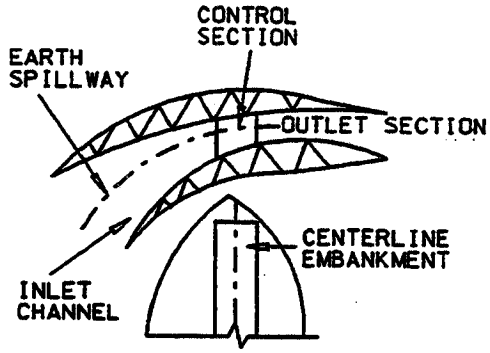

PLAN VIEW OF EMERGENCY SPILLWAY

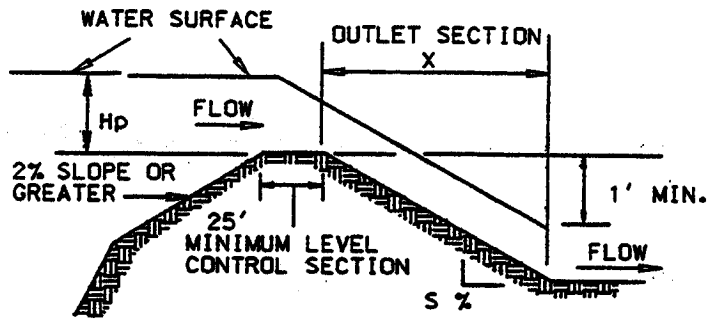

PROFILE ALONG CENTERLINE OF EMERGENCY SPILLWAY

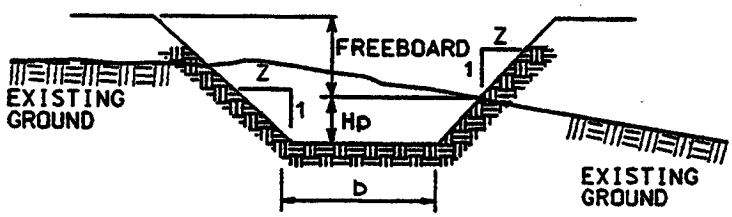

CROSS SECTION OF EMERGENCY SPILLWAY AT CONTROL SECTION

LEGEND

n= manning's Coefficient of Roughness.
Hp= Difference in elevation between the crest of the emergency spillway and the control section and water surface of the reservoir. in feet.
b= Bottom width of emergency spillway at the control section. in feet. (8' Minimum)
Q= Total discharge. in cfs.
V= Velocity. in feet per second. that will exist in the channel below the control section. at design Q. if constructed to slope (S) that is shown. (Vmax = 5 fps.)
S= Flattest slope (S). in %. allowable for the channel below the control section.
X= Minimum length of the channel below the control section. in feet.
Z= Side slope ratio.

Minimum Z = 2

NOTES

1. For a given Hp a decrease in the exit slope from S as given in the table decreases the spillway discharge but increasing the exit slope from S does not increase the discharge. If an exit slope (Se) steeper than S is used. then the velocity (Ve) in the exit channel will increase according to the following relationship:

$$Ve = V \left(\frac{Se}{S}\right)^{0.3}$$

2. Data to the right of the heavy vertical lines on Table 14 should be used with caution. as the resulting sections will be either poorly proportioned or have velocities in excess of 5 ft./sec.

Designing Anti-Seep Collars (Refer to Detail 13)

1. Determine the length of pipe within the saturation zone of the embankment (L_s) either graphically or by using the following equation, assuming that the upstream slope of the embankment intersects the invert of the pipe at its upstream end and that the slope of the pipe (S_o) is constant.

$$L_s = \frac{Y(Z+4)}{(1-4\ S_o)}$$

2. Determine the vertical projection (P_1) required to increase L_s by 15% either graphically as shown on C-10-22 or by using the equation:

$$P_1 = 0.075\ L_s$$

3. Choose the actual vertical projection (2' minimum) of each anti-seep collar (P) by rounding up P_1 or rounding down P_1 and using multiple collars.

4. Determine the number of anti-seep collars (N) required of the chosen vertical projection (P) using equation:

$$\frac{P_1}{P} = N$$

5. Either round up N or repeat steps 3 and 4 to determine optimum P/N relationship.

6. Provide construction specifications relative to the materials to be used and method for anchoring the anti-seep collar(s) to the pipe in a water tight manner.

7. Anti-seep collar spacing shall be between 5 and 14 times the vertical projection of each collar.

8. Anti-seep collar dimensions shall extend a minimum of 2 feet in all directions around the pipe.

9. Anti-seep collars shall be placed a minimum of two feet from pipe joints.

10. Anti-seep collars should be placed within the saturation zone. In cases where the spacing limit will not allow this, at least one collar shall be placed in the saturation zone.

Table 16

ANTI-SEEP COLLAR DESIGN

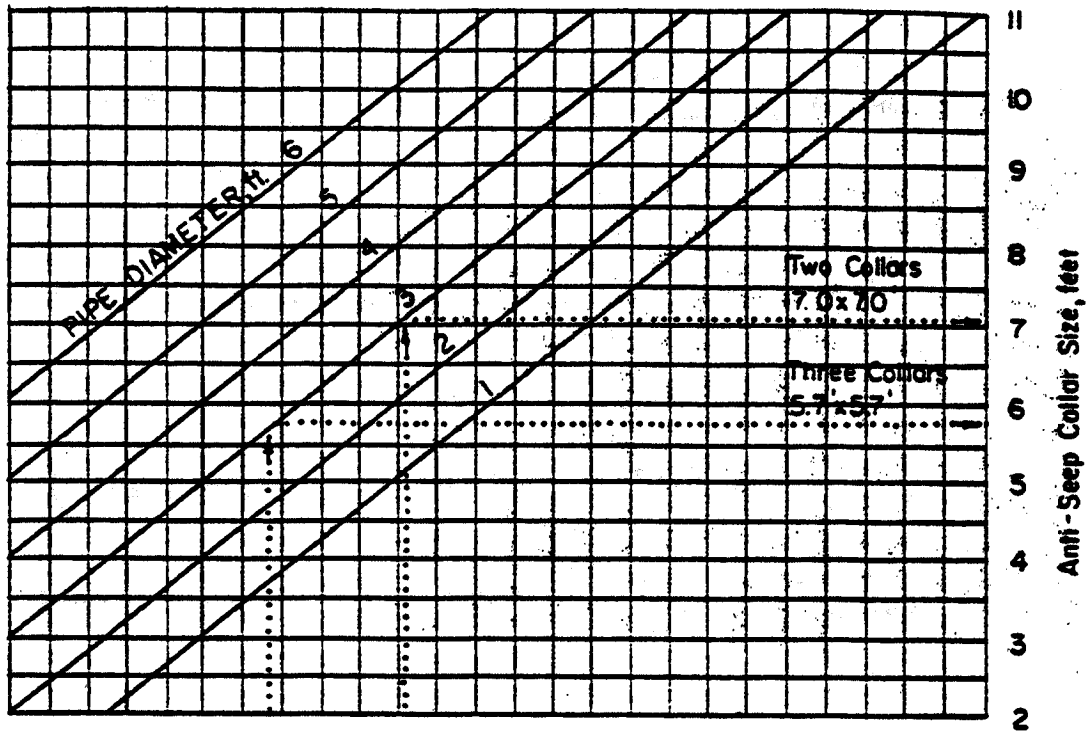

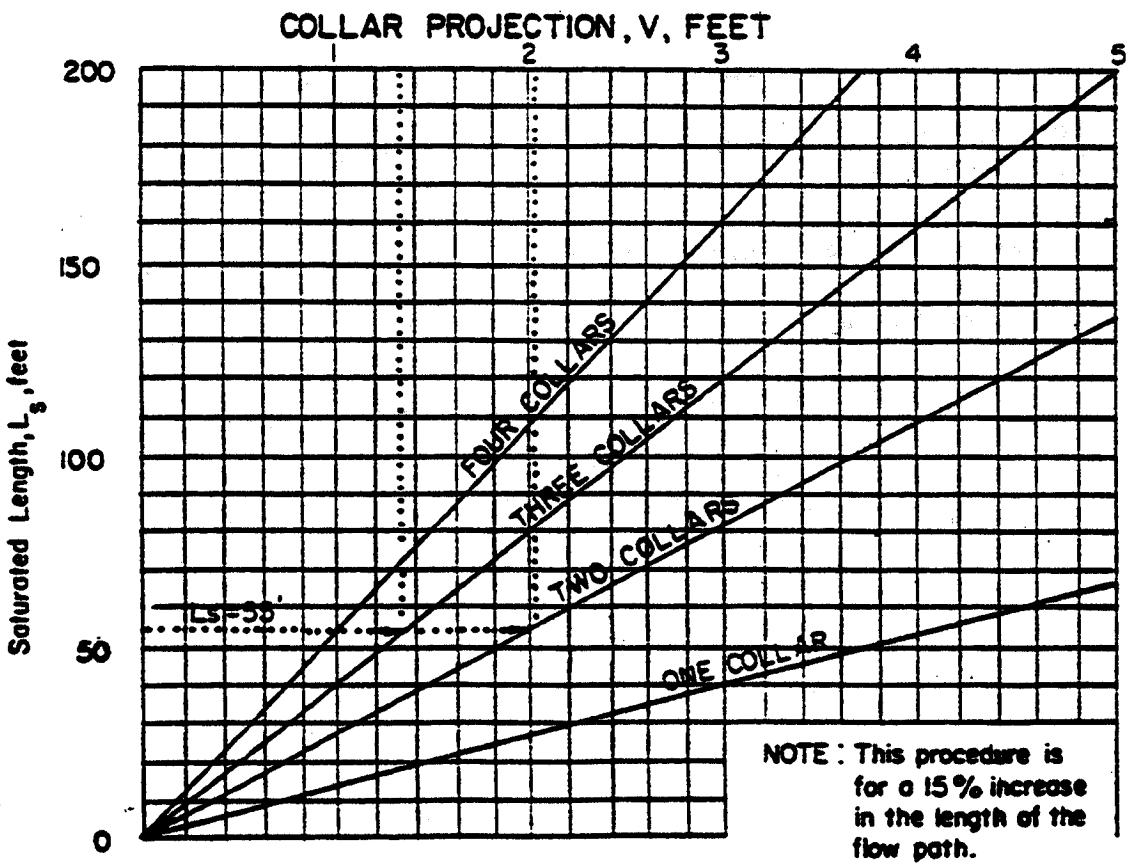

DETAIL 13 - ANTI-SEEP COLLAR DESIGN

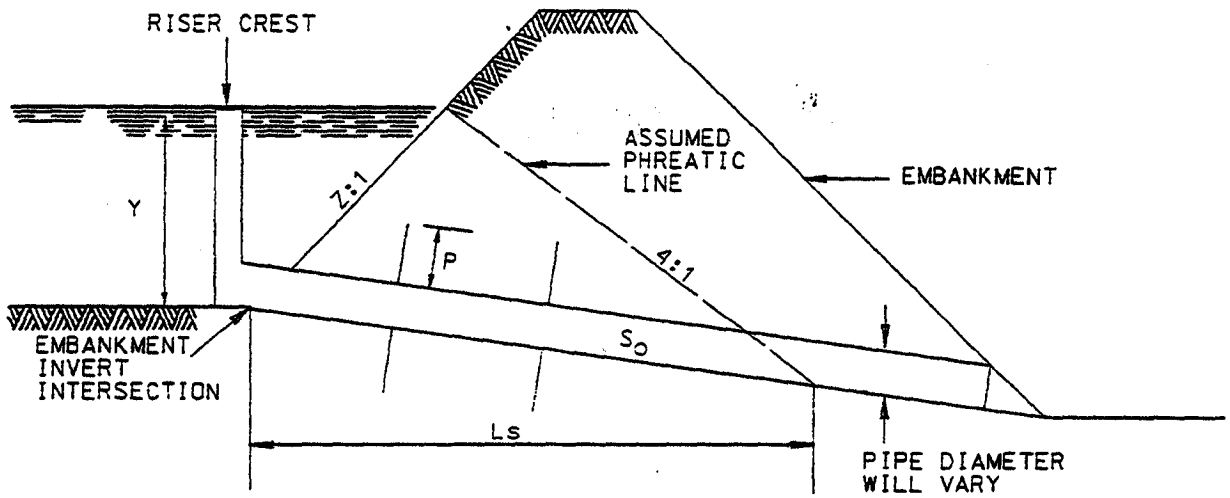

ANTI-SEEP COLLAR DESIGN

where: p= vertical projection of anti-seep collar(ft).

Ls = length of pipe in the saturated zone (ft.)

y= distance in feet from upstream invert of pipe to highest normal water level expected to occur during the life of the structure, usually the top of the riser.

z= slope of upstream embankment as a ratio of z ft. horizontal to one ft. vertical.

s_o= slope of pipe in feet per foot.

This procedure is based on the phreatic line as shown in the drawing above:

DETAIL 14 - TYPICAL ANTI-SEEP COLLARS

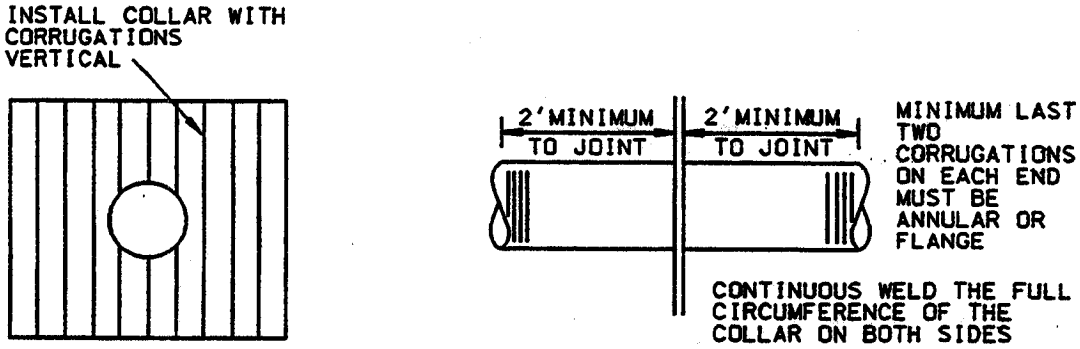

COLLAR WELDED IN PLACE ON BARREL SECTION

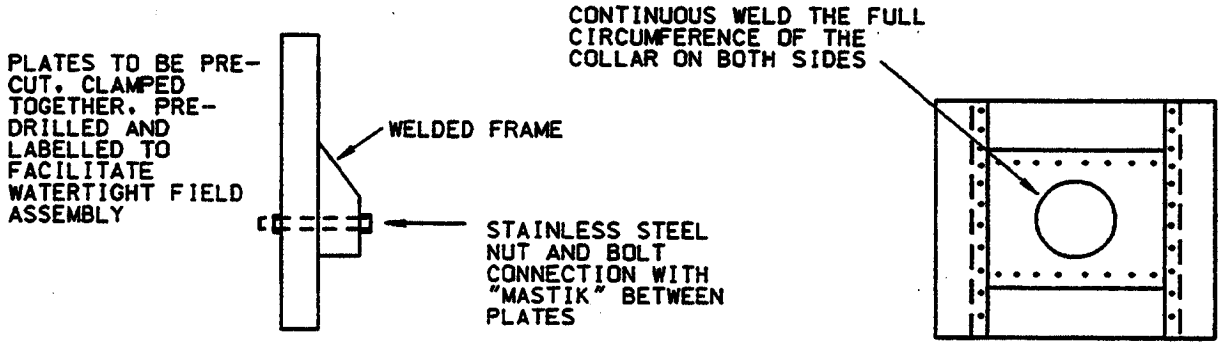

ANTI-SEEP COLLAR DESIGN

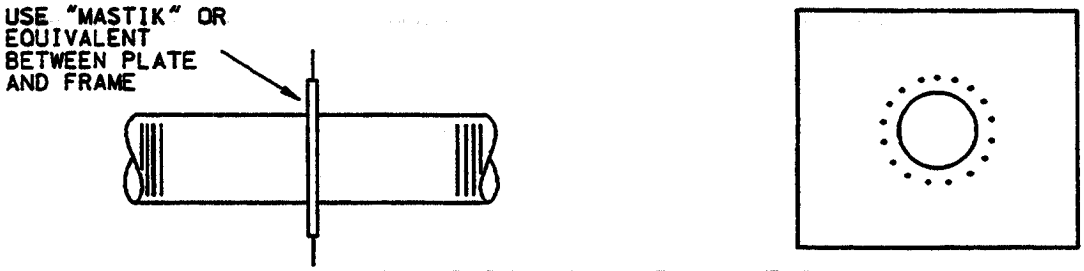

COLLAR FOR FLANGE JOINT PIPE

DETAIL 15 – RISER BASE DETAIL

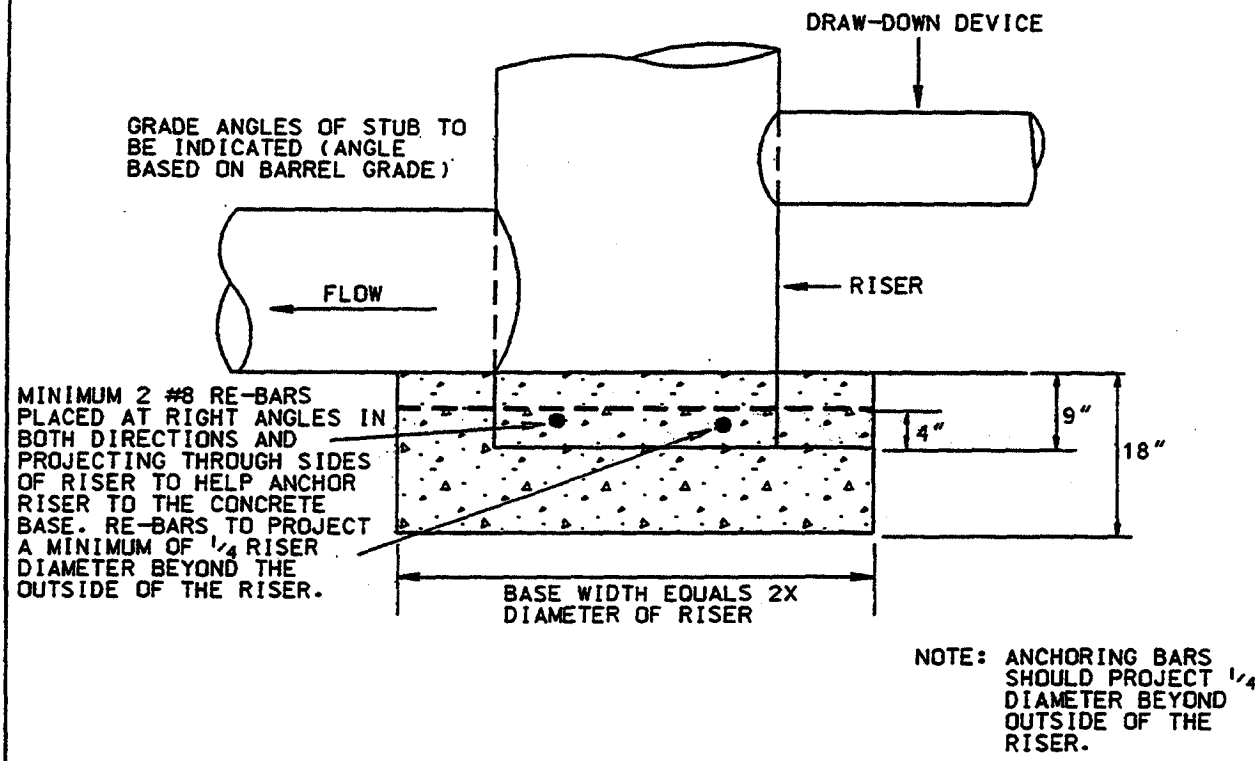

NOTE: ANCHORING BARS SHOULD PROJECT 1/4 DIAMETER BEYOND OUTSIDE OF THE RISER.

Construction Specifications

The riser shall have a base attached with a watertight connection and shall have sufficient weight to prevent flotation of the riser. Two approved bases for risers 10" or less in height are:

1. A concrete base 18" thick with the riser embedded 9" in the base.

2. A 1/4" minimum thickness steel plate attached to the riser by a continuous weld around the circumference of the riser to form a watertight connection. The plate shall have 2' of stone, gravel, or compacted earth placed on it to prevent flotation. In either case, each side of the square base shall be twice the riser diameter.

Note: For risers greater than ten feet high computations shall be made to design a base which will prevent floatation. The minimum factor of safety shall be 1.20 (downward forces = 1.20 x upward forces).

DETAIL 16 - CONCENTRIC TRASH RACK AND ANTI-VORTEX DEVICE

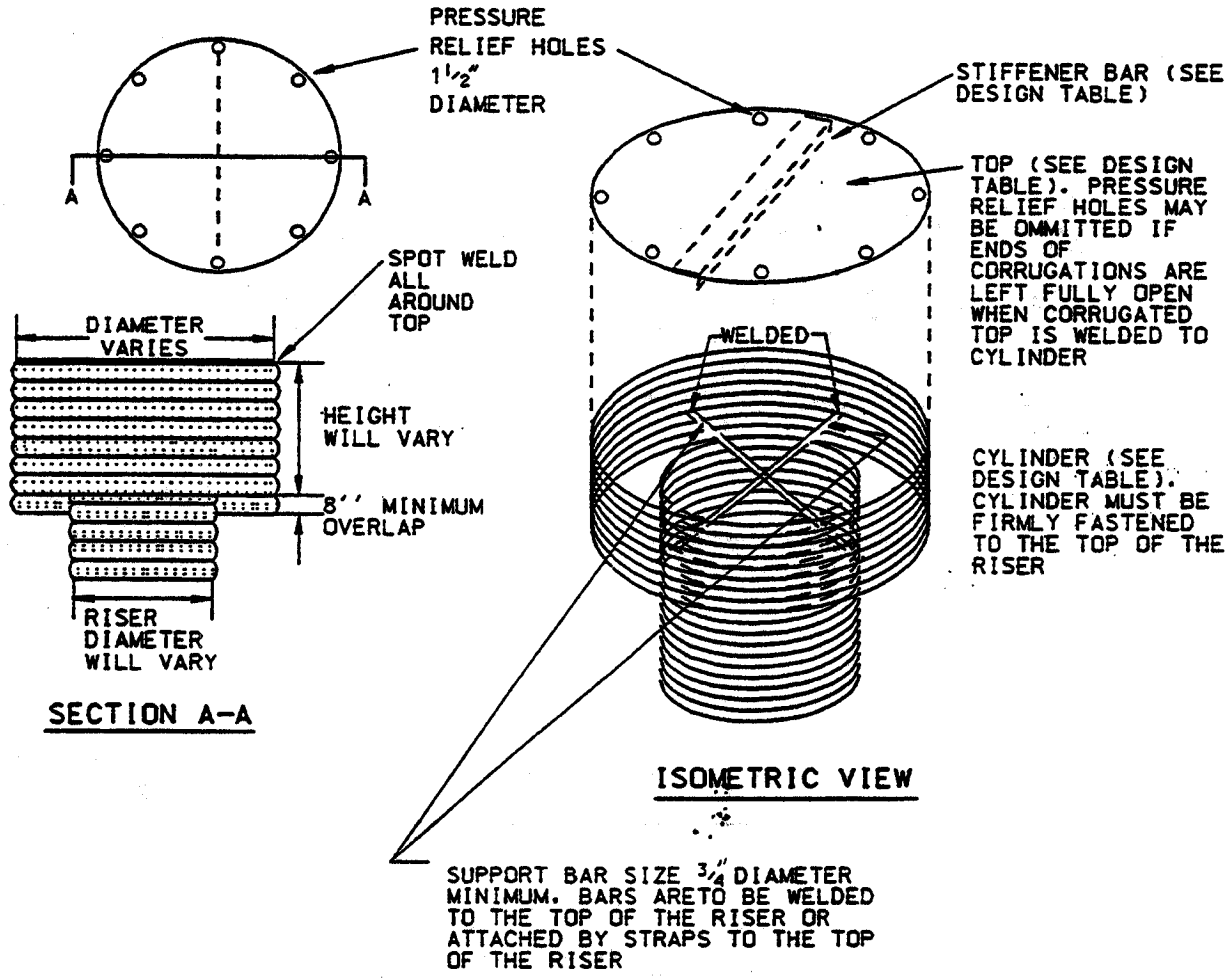

DETAIL 16 CONCENTRIC TRASH RACK AND ANTI-VORTEX DEVICE (continued)

Riser Diam., in.	Trash Rack Cylinder Diam. in.	Thick., gage	H, in.	Minimum Size Support Bar	Minimum Top Thickness	Minimum Top Stiffener
12	18	16	6	#6 Rebar	16 ga.	—
15	21	16	7	"	"	—
18	27	16	8	"	"	—
21	30	16	11	"	"	—
24	36	16	13	"	14 ga.	—
27	42	16	15	"	14 ga.	—
36	54	14	17	#8 Rebar	12 ga.	—
42	60	14	19	"	"	—
48	72	12	21	1-1/4" pipe or 1-1/4 x 1-1/4 x 1/4 angle	10 ga.	—
54	78	12	25	"	"	—
60	90	12	29	1-1/2" pipe or 1-1/2 x 1-1/2 x 1/4 angle	8 ga.	—
66	96	10	33	2" pipe or 2x2x3/16 angle	8 ga., w/stiffener	2x2x1/4 angle
72	102	10	36	"	"	2-1/2x2-1/2x1/4 angle
78	114	10	39	2-1/2" pipe or 2x2x1/4 angle	"	"
84	120	10	42	2-1/2" pipe or 2-1/2x2-1/2x1/4 angle	"	2-1/2 x2-1/2x 5/16 angle

Note: The above trash rack and anti-vortex device information is only for corrugated metal pipe. Concrete risers must meet the requirements of MD 378.

DETAIL 17 TYPES OF COUPLERS FOR CORRUGATED STEEL PIPE

(ALL CONNECTOR BANDS REQUIRE NEOPRENE GASKETS)

SIDE VIEW ANNULAR COUPLING BAND

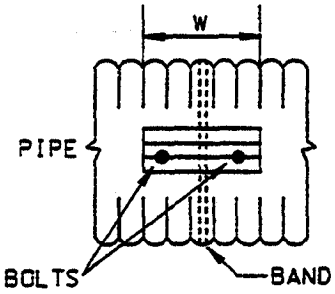

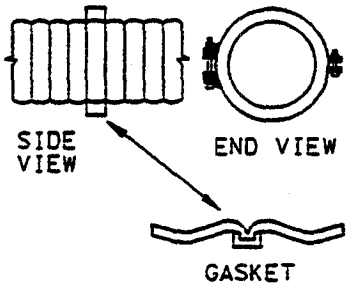

BAR AND STRAP CONNECTOR CHANNEL COUPLING BAND FOR FLANGED END CORRUGATED STEEL PIPE

STANDARD LAP-TYPE COUPLING BANDS FOR ANNULAR OR HELICAL CORRUGATED STEEL PIPE

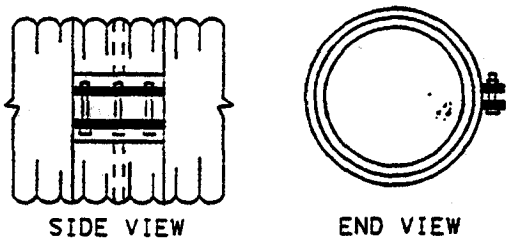

ONE PIECE LAP-TYPE COUPLING FOR ANNULAR OR HELICAL PIPE 12" TO 24" IN DIAMETER

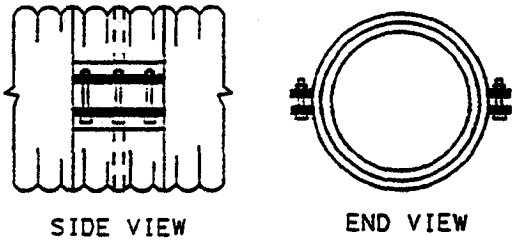

TWO PIECE LAP-TYPE COUPLING FOR ANNULAR OR HELICAL PIPE 12" TO 24" IN DIAMETER

ROD AND LUG TYPE COUPLING BAND 9 CORRUGATIONS 24" WIDE

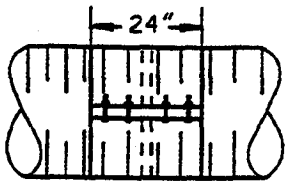

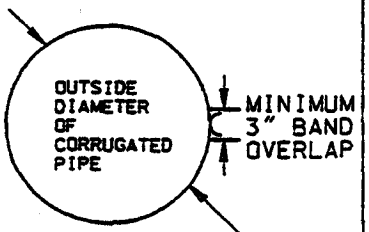

PIPE DIAMETER 15" TO 48"

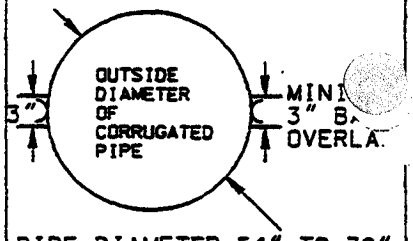

PIPE DIAMETER 54" TO 72"

BAR AND STRIP CONNECTOR

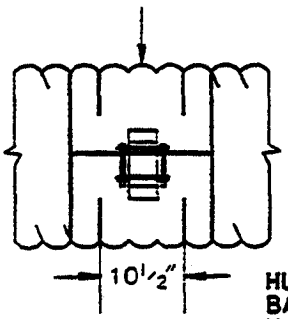

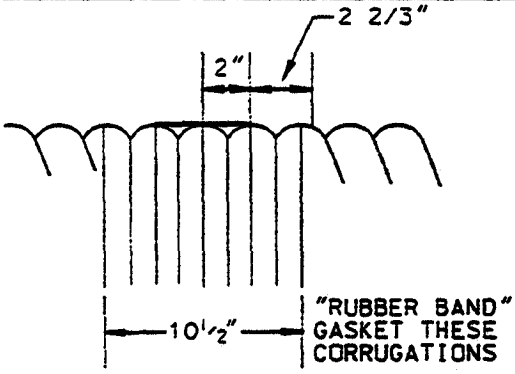

HUGGER TYPE COUPLING BAND FOR REFORMED END H.C.S.P. OR ANNULAR C.S.P.

CONTINUOUS CORRUGATION ANNULAR BAND

UNDER NO CIRCUMSTANCES. WILL THE DIMPLE (UNIVERSAL) CONNECTOR BAND BE ACCEPTABLE FOR USE IN ANY SEDIMENT CONTROL OR STORMWATER MANAGEMENT STRUCTURE

DETAIL 18 – SEDIMENT BASIN BAFFLES

PLAN VIEWS

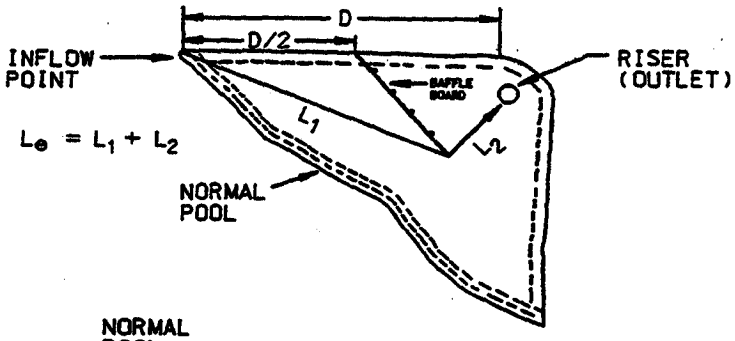

D = DISTANCE BETWEEN INFLOW AND OUTFLOW

A = AREA OF NORMAL POOL

W_e = EFFECTIVE WIDTH = A/D

L_e = TOTAL DISTANCE FROM THE INFLOW POINT AROUND THE BAFFLES TO THE RISER

FORMULA: $\frac{L_e}{W_e} \geq 2$

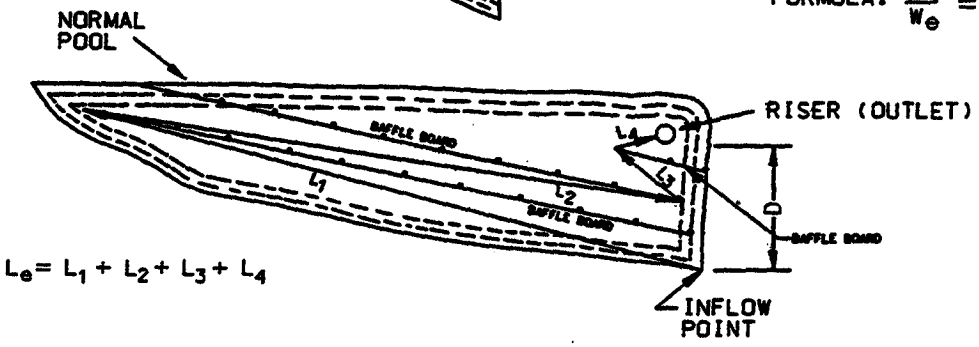

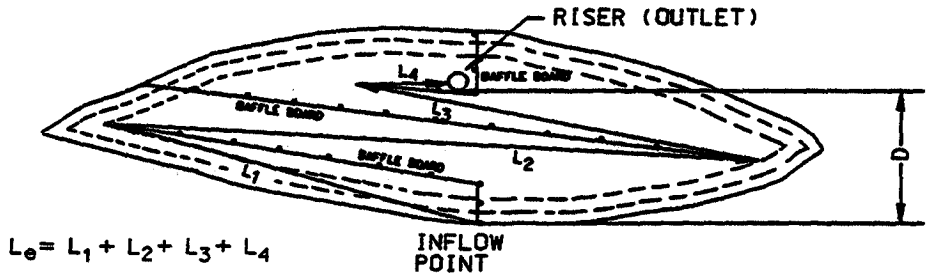

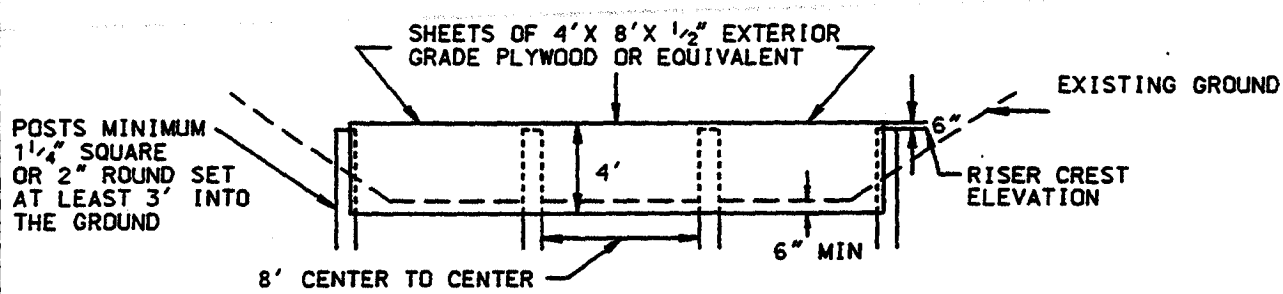

BAFFLE DETAIL

U.S. DEPARTMENT OF AGRICULTURE SOIL CONSERVATION SERVICE	PAGE C – 10 – 28	MARYLAND DEPARTMENT OF ENVIRONMENT WATER MANAGEMENT ADMINISTRATION

BASIN DRAWDOWN SCHEMATIC
HORIZONTAL DRAW-DOWN DEVICE

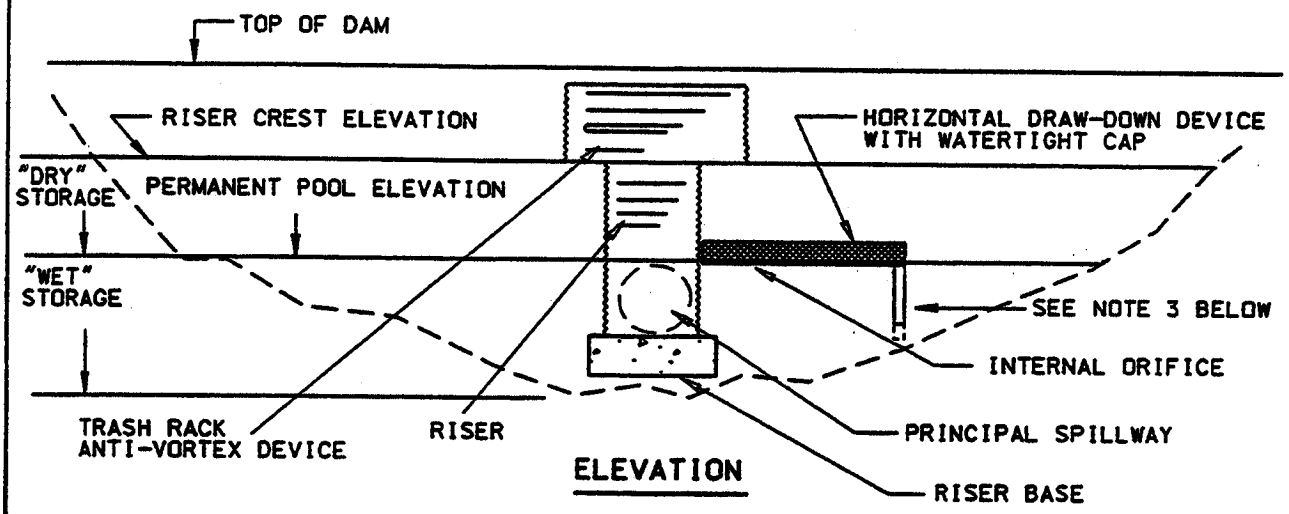

ELEVATION

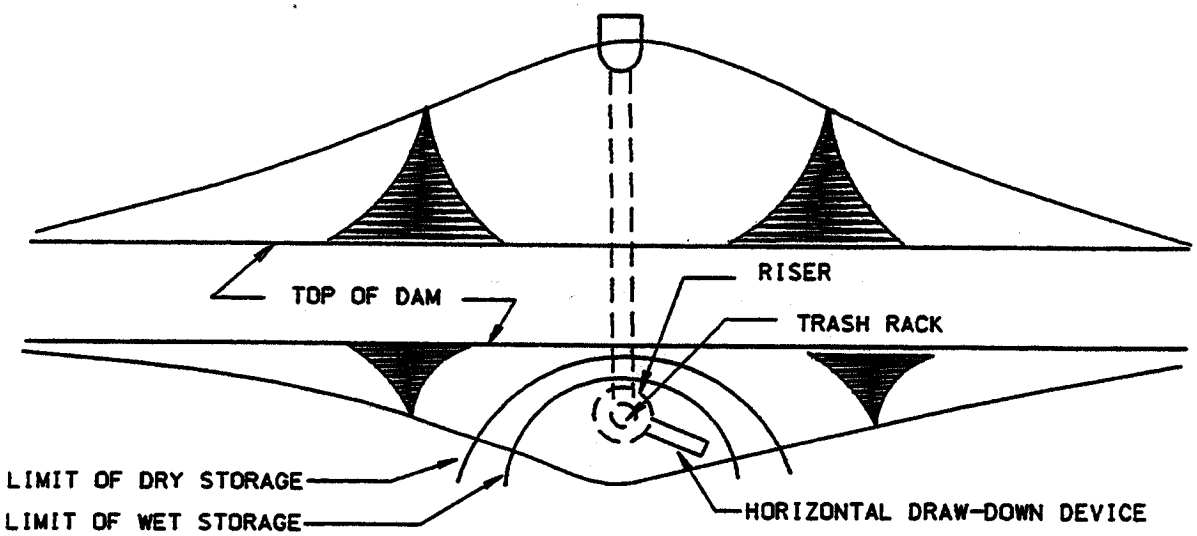

PLAN VIEW

Construction Specifications

1. The total area of the perforations must be greater than 2 times the area of the internal orifice.

2. The perforated portion of the draw-down device shall be wrapped with ½" hardware cloth and geotextile fabric. The geotextile fabric shall meet the specifications for Geotextile Class E.

3. Provide support of draw-down device to prevent sagging and floatation. An acceptable preventative measure is to stake both sides of draw-down device with 1" steel angle, or 1' by 4" square or 2" round wooden posts set 3' minimum into the ground then joining them to the device by wrapping with 12 gauge minimum wire.

BASIN DRAWDOWN SCHEMATIC
VERTICAL DRAW-DOWN DEVICE

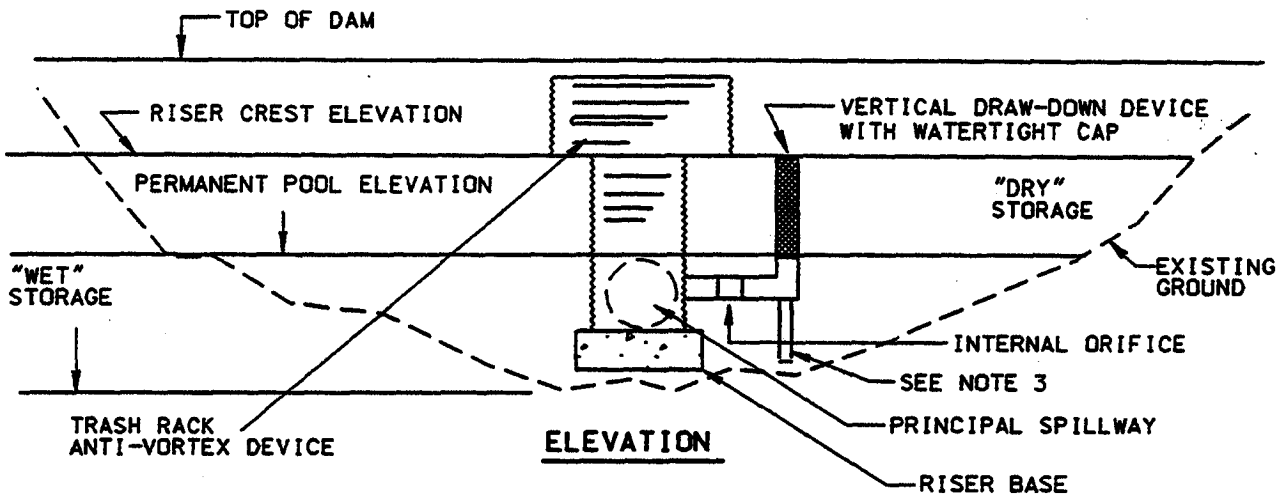

ELEVATION

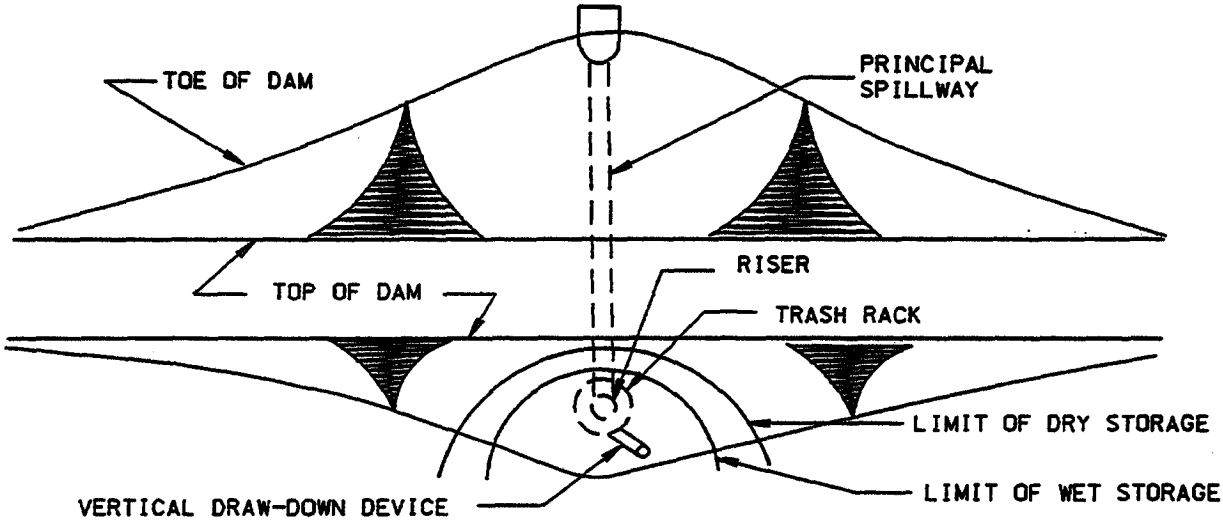

PLAN VIEW

Construction Specifications

1. Perforations in the draw-down device may not extend into the wet storage.

2. The total area of the perforations must be greater than 2 times the area of the internal orifice.

3. The perforated portion of the draw-down device shall be wrapped with ½" hardware cloth and geotextile fabric. The geotextile fabric shall meet the specifications for Geotextile Class E.

4. Provide support of draw-down device to prevent sagging and floatation. An acceptable preventative measure is to stake both sides of draw-down device with 1" steel angle. or 1' by 4" square or 2" round wooden posts set 3' minimum into the ground then joining them to the device by wrapping with 12 guage minimum wire.

U.S. DEPARTMENT OF AGRICULTURE SOIL CONSERVATION SERVICE	PAGE C - 10 - 30	MARYLAND DEPARTMENT OF ENVIRONMENT WATER MANAGEMENT ADMINISTRATION

11.0 STANDARDS AND SPECIFICATIONS

FOR

STONE OUTLET STRUCTURES

Definition

A temporary stone dike installed in conjunction with and as a part of an earth dike.

Purpose

The purpose of the Stone Outlet Structure is to filter sediment laden runoff, provide a protected outlet for an earth dike, provide for diffusion of concentrated flow, and allow the area behind the dike to dewater.

Conditions Where Practice Applies

Stone outlet structures apply to any point of discharge where there is need to dispose of runoff at a protected outlet or to diffuse concentrated flow for the duration of the period of construction. **The drainage area to this practice shall be 1/2 acre or less.**

Outlet

The stone outlet structure shall be located so as to discharge onto an already stabilized area or into a stable watercourse. Stabilization shall consist of complete vegetative cover, paving, etc., sufficiently established to be erosion resistant.

Construction Specifications

1. 2" to 3" stone[18] or recycled concrete equivalent is preferred but clean gravel may be used if stone is not available.

2. The crest of the stone dike shall be at least 6" lower than the lowest elevation of the top of the earth dike and shall be level.

3. The stone outlet structure shall be embedded into the soil a minimum of 4".

4. The minimum length of the crest of the stone outlet structure shall be 6'.

5. The baffle board shall extend 1' into the dike and 4" into the ground and be staked in place.

6. The drainage area to this structure shall be less than 1/2 acre.

[18] Refer to Table 28

DETAIL 19 – STONE OUTLET STRUCTURE

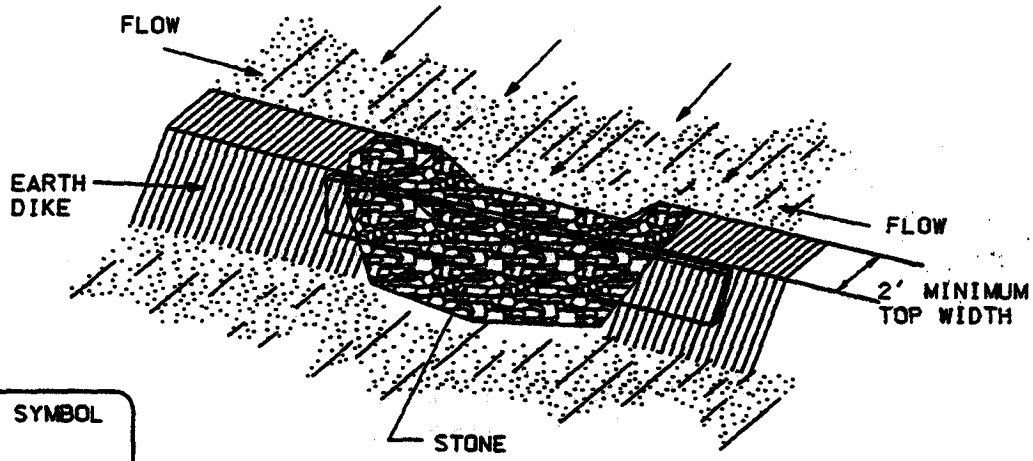

STANDARD SYMBOL

TSDS

PERSPECTIVE VIEW

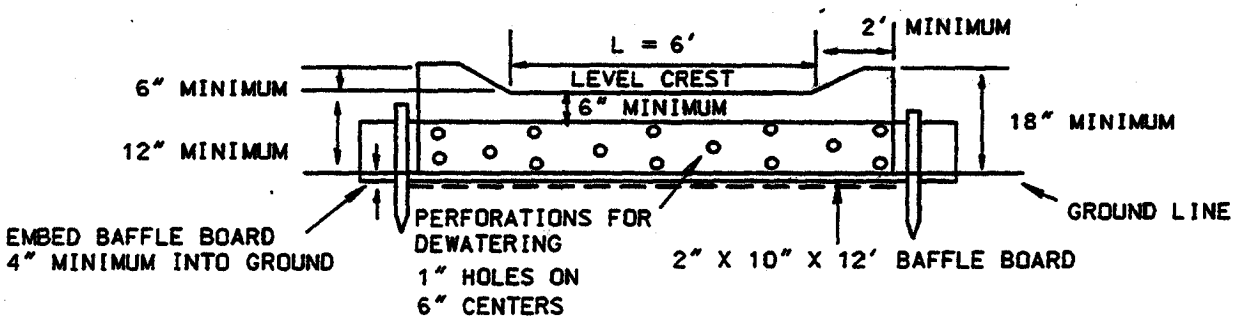

CROSS SECTION

Construction Specifications

1. Crushed stone shall be used. Gravel may be used if crushed stone is not available. The stone shall be 2"-3" in size.

2. The crest of the stone dike shall be at least 6" lower than the lowest elevation of the top of the earth dike and shall be level.

3. The stone outlet structure shall be embedded into the soil a minimum of 4".

4. The minimum length of the crest of the stone outlet structure shall be 6'.

5. The stone outlet structure shall be inspected after each rain. Stone shall be replaced when the structure ceases to function and ponding results.

6. The baffle board shall be extended one foot into the dike, staked and embedded 4" into the existing ground.

7. The drainage area to this structure shall be less than 1/2 acre.

Section D - DEWATERING PRACTICES

DEWATERING STRATEGY

Dewatering refers to the act of removing and discharging water from excavated areas on construction sites or from sediment traps or basins on construction sites. Standards and specifications for dewatering practices follow.

These standards apply to removal and discharge of water from any excavated area or sediment trap or basin at any construction site. Given the unique conditions at any particular construction site, any or all of the practices may apply. Regardless of the applicability of the practices listed herein, operators are required to use acceptable procedures for maintenance and dewatering. In all cases, every effort shall be made to eliminate sediment pollution associated with dewatering.

Designers shall specify the preferred procedures for dewatering on plans. In particular, designers should identify procedures for dewatering sediment traps and basins prior to elimination of the last sediment control facility on the site or prior to conversion of sediment control facilities to stormwater management facilities. Recommended procedures shall be consistent with these standards. Atypical site conditions may require innovative dewatering designs. Dewatering measures not referenced in this standard may be used with the consent of the approval authority.

Dewatering of Excavated Areas

A. Designers shall specify on plans, and in sequences of construction included on plans, practices for dewatering of excavated areas. Plan reviewers shall check to see that procedures for dewatering are included on plans.

B. In all cases, water removed from excavated areas shall be discharged such that it shall pass through a sediment control device prior to entering receiving waters. Sediment control devices include sediment traps and basins, in addition to the practices in this section.

Approved Practices for Dewatering of Excavated Areas

1. Pumping of water to an existing sediment basin or trap in which the entire volume of water from the area to be dewatered can be contained without discharge to receiving waters.

2. Pumping of water to an existing sediment basin or trap such that the entire volume of water from the area to be dewatered can be managed without exceeding the design outflow from the sediment control structure.

3. Removable Pumping Station - Standards and specifications for Removable Pumping Station are on Detail 20A.

4. Use of a Sump Pit - Standards and specifications for a sump pit are on Detail 20B.

5. Sediment Tank - Standards and specifications for a sump pit are on Detail 21.

Dewatering of Sediment Traps and Basins

Designers shall specify on plans, and in sequences of construction included on plans, the practices for dewatering of traps and basins. Plan reviewers shall check to see that procedures for dewatering to be used are included on plans. In all cases, water removed from traps and basins shall be discharged so that it passes through a sediment control device prior to entering receiving waters.

Approved Practices for Dewatering of Traps and Basins

1. Removable pumping station

2. Use of a Sump Pit.

3. Use of a floating suction hose to pump the cleaner water from the top of the pond. As the cleaner water is pumped the suction hose will lower and eventually encounter sediment laden water. When this happens the pumping operation will cease. Provisions shall be made to filter water prior to discharge to receiving waters. When floating suction hoses are used, personnel shall be assigned to monitor pumping operations to ensure that sediment pollution is abated. **Pumping sediment laden water into the waters of the State without filtration is strictly forbidden.**

4. Vegetative buffers - The maintenance of areas of existing vegetation adjacent to wetlands, streams, and other areas of significant natural resource value in connection with sediment control practices noted in this manual can ensure that such areas are not adversely affected by grading and construction or by stormwater runoff once construction is completed. The maintenance of such areas adjacent to streams is particularly important because they lessen the impact of sedimentation on fish and spawning to keep streams at water temperatures favorable to fish and other aquatic species, and provide food such as leaves and twigs for aquatic organisms, particularly in headwater streams.

The width needed for such areas in order to provide adequate protection is dependent on the type of area to be protected, the type of vegetation in the buffer, the slope present, the ability of the soils in the buffer to absorb water, the size distribution of the incoming sediment, and the rate of runoff. However, research studies have shown that the maintenance of a buffer of 100 feet in width in areas with low to moderate slopes should generally provide adequate protection.

12.0 DEWATERING SPECIFICATIONS

FOR

REMOVABLE PUMPING STATION

Definition

A temporary structure which is used to remove water from excavated areas, sediment traps and basins.

Purpose

The Removable Pumping Station is an easily maintained device that filters sediment laden water at a pump intake, prior to discharging to a suitable area.

Conditions Where Practice Applies

Removable Pumping Stations are constructed when water collects and must be pumped away during excavation, cofferdam dewatering, maintenance or removal of sediment traps and basins or for other uses as applicable. These are preferred over Sump Pits on projects where a long duration of pumping is expected.

Design Criteria

The number of Removable Pumping Stations and their locations shall be determined by the designer and included on the plans. Contractors may relocate sump pits to optimize use but discharge location changes must be coordinated with inspectors. A design is not required but construction must conform to the general criteria outlined on Detail 20A.

A perforated, vertical standpipe wrapped with wire mesh and geotextile is placed inside a larger pipe. The outside pipe is then enveloped by a cone of washed stone. Water is then pumped from the center of the inside pipe to a suitable discharge area.

Water pumped from the standpipe should discharge into a sediment trap, sediment basin or stabilized area.

Construction Specifications

1. The inner pipe shall be constructed by perforating a 12" to 36" diameter pipe with a watertight cap on the bottom end and wrapping it with 1/2" hardware cloth and Geotextile Class E[19]. The perforations shall be 1/2" X 6" slits or 1" diameter holes 6" on center.

2. The outer pipe shall be at least 4" larger in diameter than the inside pipe. Both the inner and outer pipes should extend 12" to 18" above the riser crest elevation, or anticipated high water elevation.

[19] Refer to Table 27

3. Filter material ranging from clean gravel (minimal fines) to #57 stone[20] (1 1/2" maximum diameter) should be backfilled around the outer pipe.

4. The suction hose from the pump shall be placed inside the inner pipe to begin dewatering. The discharge hose shall be placed in a stabilized area downslope of unstabilized areas to prevent erosion. Meadow or wooded areas are preferred discharge locations but storm drains and paved areas are acceptable.

5. Maintenance - The inner pipe can easily be removed to facilitate changing the geotextile when it clogs. Maintenance must be performed when the pump runs dry and backed up water remains.

[20] Refer to Table 28

DETAIL 20A - REMOVABLE PUMPING STATION

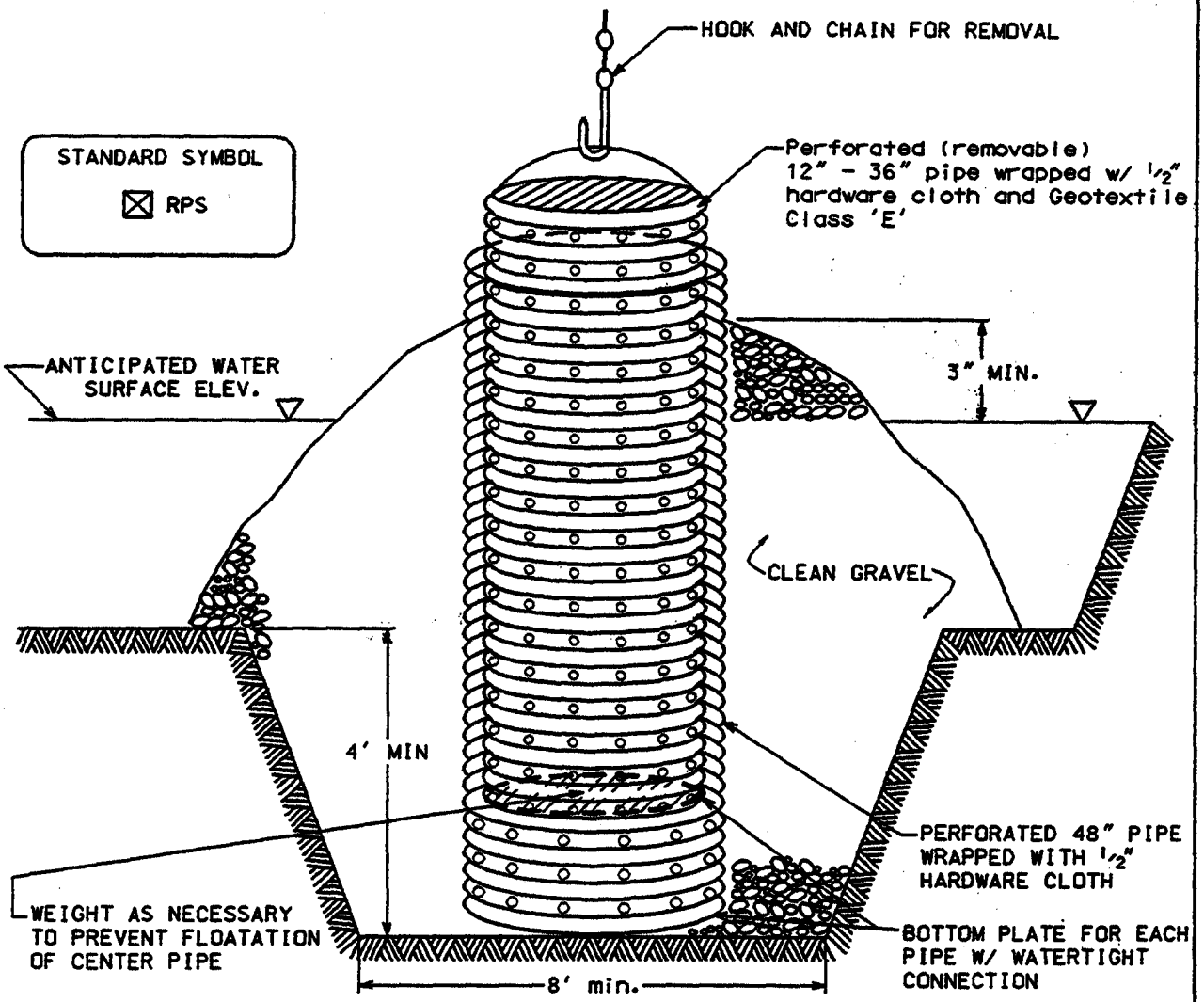

ELEVATION (CUT AWAY)

Construction Specifications

1. The outer pipe should be 48" dia. or shall, in any case, be at least 4" greater in diameter than the center pipe. The outer pipe shall be wrapped with 1/2" hardware cloth to prevent backfill material from entering the perforations.

2. After installing the outer pipe, backfill around outer pipe with 2" aggregate or clean gravel.

3. The inside stand pipe (center pipe) should be constructed by perforating a corrugated or PVC pipe between 12" and 36" in diameter. The perforations shall be 1/2" X 6" slits or 1" diameter holes 6" on center. The center pipe shall be wrapped with 1/2" hardware cloth first, then wrapped again with Geotextile Class E.

4. The center pipe should extend 12" to 18" above the anticipated water surface elevation or riser crest elevation when dewatering a basin.

13.0 STANDARDS AND SPECIFICATIONS

FOR

SUMP PIT

Description of Practice

A temporary pit from which pumping is conducted to remove excess water while minimizing sedimentation.

Purpose

The sump pit filters water being pumped to reduce sedimentation to receiving streams.

Conditions Where Practice Applies

Sump Pits are constructed when water collects and must be pumped away during excavating, cofferdam dewatering, maintenance or removal of sediment traps and basins or other uses as applicable.

Design Criteria

The number of sump pits and their locations shall be determined by the designer and included on the plans. Contractors may relocate sump pits to optimize use but discharge location changes must be coordinated with inspectors. A design is not required but construction must conform to the general criteria outlined on Detail 20B.

A perforated vertical standpipe is wrapped with 1/2" hardware cloth and Geotextile Class E[21], then placed in the center of an excavated pit which is then backfilled with filter material consisting of anything from clean gravel (minimal fines) to #57 stone (1 1/2" maximum diameter). Water is then pumped from the center of the standpipe to a suitable discharge area such as into a sediment trap, sediment basin or stabilized area.

Construction Specifications

1. Pit dimensions are variable, with the minimum diameter being twice the diameter of the standpipe.

2. The standpipe should be constructed by perforating a 12" to 36" diameter pipe then wrapping it with 1/2" hardware cloth and Geotextile Class E. The perforations shall be 1/2" X 6" slits or 1" diameter holes 6" on center.

3. A base of filter material consisting of anything from clean gravel (minimal fines) to #57 stone (1 1/2" maximum diameter) should be placed in the pit to a depth of 12". After installing the standpipe, the pit surrounding the standpipe should then be backfilled with the same filter material.

4. The standpipe shall extend 12" to 18" above the lip of the pit or riser crest elevation (basin dewatering) and filter material should extend 3" minimum above the anticipated standing water level.

Maintenance

To maintain, sump pits must be removed and reconstructed when pump runs dry.

[21] Refer to Table 27

DETAIL 20B - SUMP PIT

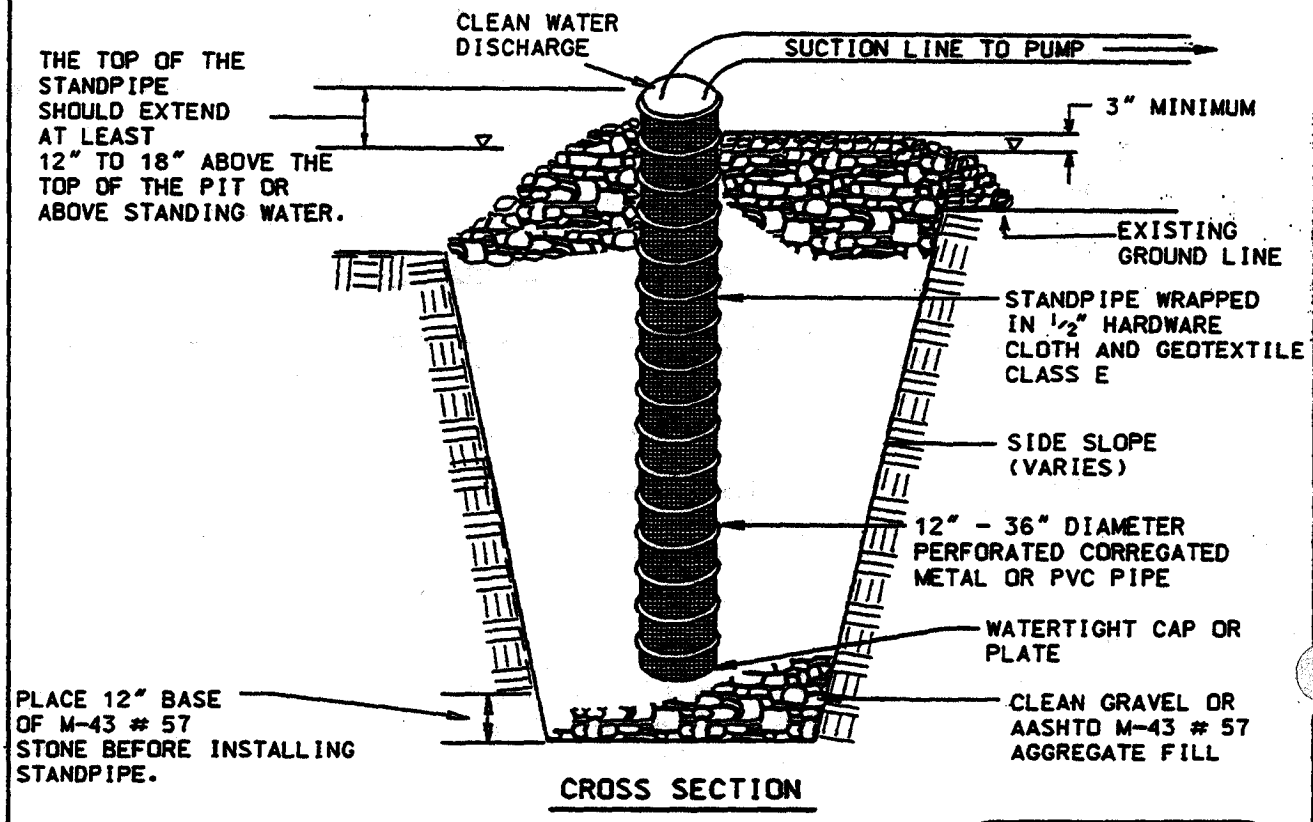

STANDARD SYMBOL

⊠ SP

Construction Specifications

1. Pit dimensions are variable. with the minimum diameter being 2 times the standpipe diameter.

2. The standpipe should be constructed by perforating a 12" to 24" diameter corrugated or PVC pipe. Then wrapping with 1/2" hardware cloth and Geotextile Class E. The perforations shall be 1/2" x 6" slits or 1" diameter holes.

3. A base of filter material consisting of clean gravel or #57 stone should be placed in the pit to a depth of 12". After installing the standpipe. the pit surrounding the standpipe should then be backfilled with the same filter material.

4. The standpipe should extend 12" to 18" above the lip of the pit or the riser crest elevation (basin dewatering only) and the filter material should extend 3" minimum above the anticipated standing water elevation.

14.0 STANDARDS AND SPECIFICATIONS

FOR

SEDIMENT TANK

Definition

A sediment tank is a compartmented tank container through which sediment laden water is pumped to trap and retain the sediment.

Purpose

To trap and retain sediment prior to pumping the water to drainageways, adjoining properties, and rights-of-way below the sediment tank site.

Conditions Where Practice Applies

A sediment tank is to be used on sites where excavations are deep, and space is limited, such as urban construction, where direct discharge of sediment laden water to stream and storm drainage systems is to be avoided.

Design Criteria

1. Location The sediment tank shall be located for ease of clean-out and disposal of the trapped sediment and to minimize interference with construction activities and pedestrian traffic.

2. Tank Size The following formula should be used in determining the storage volume of the sediment tank: 1 cubic foot of storage for each gallon per minute of pump discharge capacity.

An example of a typical sediment tank is shown below. Other container designs can be used if the storage volume is adequate and approval is obtained from the local approving agency.

Tanks may be connected in series. Geotextile fabric mesh sizes may vary from tank to tank with the downstream-most layer meeting Geotextile Class C[22] or better.

[22] Refer to Table 27

DETAIL 21 - PORTABLE SEDIMENT TANK

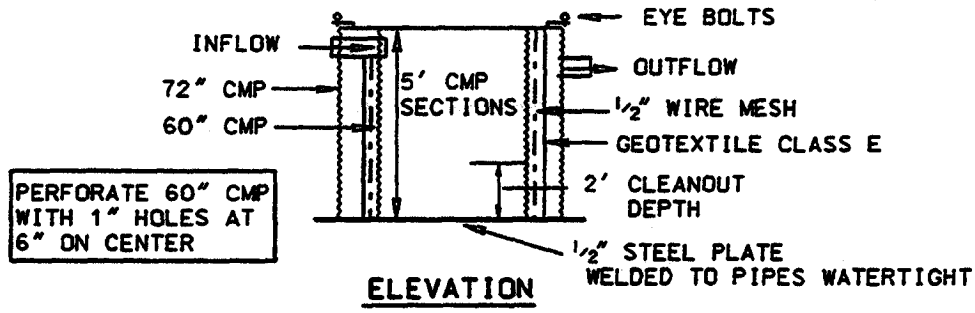

ELEVATION

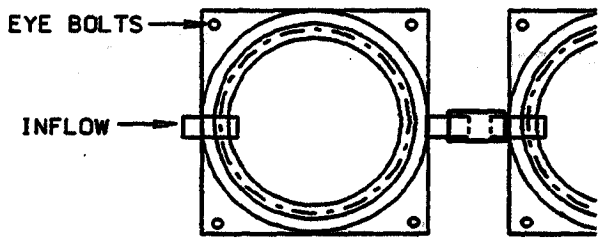

PLAN VIEW

STANDARD SYMBOL

⊠ PST

Construction Specifications

1. The following formula should be used in determining the storage volume of the sediment tank: 1 cubic foot of storage for each gallon per minute of pump discharge capacity.

2. An example of a typical sediment tank is shown above. Other container designs can be used if the storage volume is adequate and approval is obtained from the local approving agency.

3. Tanks may be connected in series.

Section E - FILTERING PRACTICES

15.0 STANDARDS AND SPECIFICATIONS

FOR

SILT FENCE

Definition

Temporary barriers of woven geotextile fabric used to intercept, reduce velocity and filter surface runoff from disturbed areas.

Purpose

Silt fences filter sediment from runoff so that deposition of transported sediment can occur. Silt fences can be used to intercept sheet flow only. They cannot be used as velocity checks in ditches or swales, or placed where they will intercept concentrated flow.

Conditions Where Practice Applies

Silt fence is limited to intercepting sheet flow runoff from limited distances according to slope. Silt fence provides filtering and velocity dissipation to promote gravity settling of sediments.

Design Criteria

1. Silt fence should be used with caution in areas of rocky soils that may prevent trenching.

2. Silt fence should be placed on or parallel to contours.

3. The length of silt fences must conform to the following:

Table 17 Silt Fence Design Constraints

Slope Steepness	(Maximum) Slope Length	(Maximum) Silt Fence Length
Flatter than 50:1 (2%)	unlimited	unlimited
50:1 to 10:1 (2 - 10%)	125 feet	1,000 feet
10:1 to 5:1 (10 - 20%)	100 feet	750 feet
5:1 to 3:1 (20 - 33%)	60 feet	500 feet
3:1 to 2:1 (33 - 50%)	40 feet	250 feet
> 2:1 (> 50%)	20 feet	125 feet

4. In areas of less than 2% slope and sandy soils (USDA general classification system, soil class A) maximum slope length and silt fence length will be unlimited. In these areas a silt fence may be the only perimeter control required.

5. Downslope from the silt fence should be undisturbed ground.

Construction Specifications

1. Fence posts shall be a minimum of 36 inches long driven 16" minimum into ground. Wood posts shall be 1 1/2" X 1 1/2" (minimum) square cut, or 1 3/4" (minimum) diameter round and shall be of sound quality hardwood. Steel posts will be standard T or U section weighing not less than 1.00 pound per linear foot.

2. Geotextile shall be fastened securely to each fence post with wire ties or staples at top and mid-section and shall meet the following requirements for Geotextile Class F:

Tensile Strength	50 lbs/in (min.)	Test: MSMT 509
Tensile Modulus	20 lbs/in (min.)	Test: MSMT 509
Flow Rate.	3 gal/ft^2/minute (max.)	Test: MSMT 322
Filtering Efficiency	75% (min.)	Test: MSMT 322

3.Where ends of geotextile fabric come together, they shall be overlapped, folded and stapled to prevent sediment bypass.

4.Silt Fence shall be inspected after each rainfall event and maintained when bulges occur or when sediment accumulation reached 50% of the fabric height.

DETAIL 22 – SILT FENCE

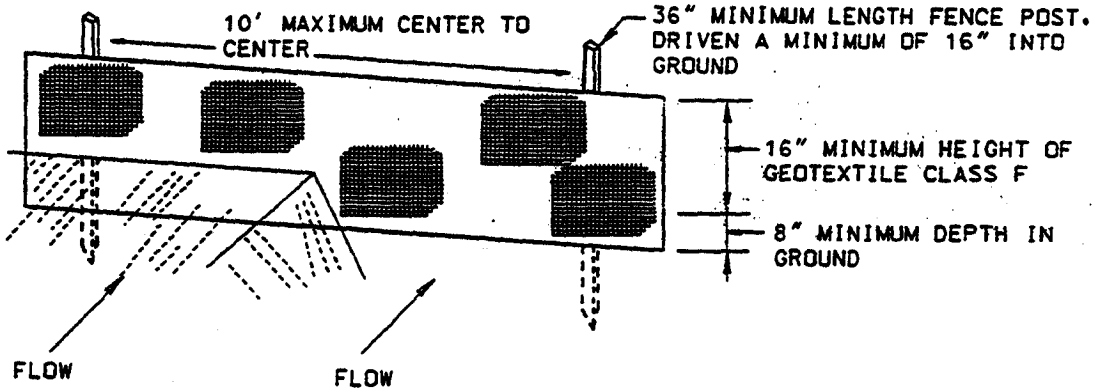

PERSPECTIVE VIEW

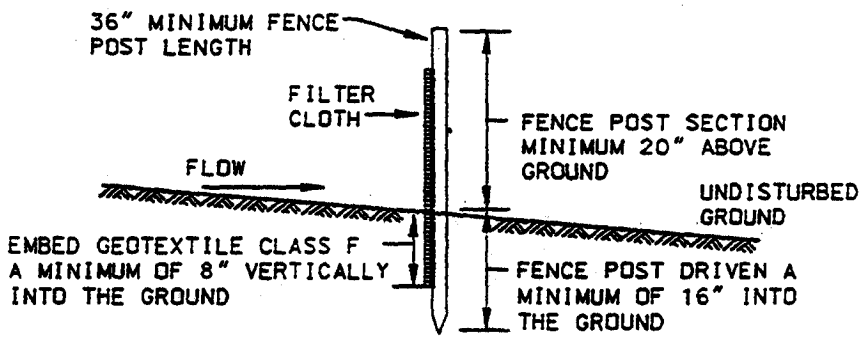

CROSS SECTION

TOP VIEW

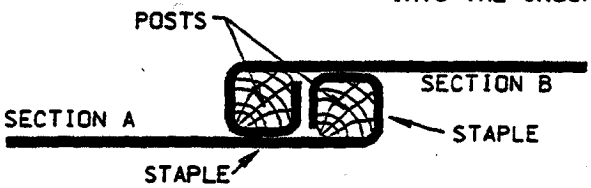

JOINING TWO ADJACENT SILT FENCE SECTIONS

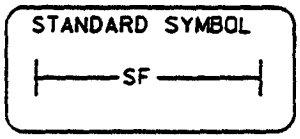

Construction Specifications

1. Fence posts shall be a minimum of 36" long driven 16" minimum into the ground. Wood posts shall be 1½" x 1½" square (minimum) cut, or 1¾" diameter (minimum) round and shall be of sound quality hardwood. Steel posts will be standard T or U section weighting not less than 1.00 pond per linear foot.

2. Geotextile shall be fastened securely to each fence post with wire ties or staples at top and mid-section and shall meet the following requirements for Geotextile Class F:

Tensile Strength	50 lbs/in (min.)	Test: MSMT 509
Tensile Modulus	20 lbs/in (min.)	Test: MSMT 509
Flow Rate	0.3 gal ft²/ minute (max.)	Test: MSMT 322
Filtering Efficiency	75% (min.)	Test: MSMT 322

3. Where ends of geotextile fabric come together, they shall be overlapped, folded and stapled to prevent sediment bypass.

4. Silt Fence shall be inspected after each rainfall event and maintained when bulges occur or when sediment accumulation reached 50% of the fabric height.

SILT FENCE

Silt Fence Design Criteria

Slope Steepness	(Maximum) Slope Length	(Maximum) Silt Fence Length
Flatter than 50:1	unlimited	unlimited
50:1 to 10:1	125 feet	1,000 feet
10:1 to 5:1	100 feet	750 feet
5:1 to 3:1	60 feet	500 feet
3:1 to 2:1	40 feet	250 feet
2:1 and steeper	20 feet	125 feet

Note: In areas of less than 2% slope and sandy soils (USDA general classification system, soil Class A) maximum slope length and silt fence length will be unlimited. In these areas a silt fence may be the only perimeter control required.

16.0 STANDARDS AND SPECIFICATIONS

FOR

STORM DRAIN INLET PROTECTION

Definition

A filter constructed around a storm drain inlet.

Purpose

Storm Drain Inlet Protection is used to filter sediment laden runoff before it enters the storm drain system.

Conditions Where Practices Applies

Storm drain inlet protection is a secondary sediment control device and is not to be used in place of a sediment trapping device unless approved by the appropriate approval authority.

Design Criteria

Storm drain inlet protection shall be used when the drainage area to an inlet is disturbed and the following conditions prevail:

1. It is not possible to temporarily divert the storm drain outfall into a sediment-trapping device;

2. Watertight blocking of inlets is not advisable; and

3. Drainage area is less than 1/4 acre for curb or standard inlet protections and 1 acre for elevated or yard inlets. For yard inlets, the total for inlets in series must be 1 acre or less and the contributing drainage area must have slopes flatter than 5%.

Maintenance

Maintenance requirements for storm drain inlet protection are intense, due to the susceptibility to clogging. When the structure does not drain completely within 48 hours after a storm event, it is clogged. When this occurs, accumulated sediment must be removed and the geotextile fabric and stone must be cleaned or replaced.

Construction Specifications

A. Standard Inlet Protection (Elevated or Yard Inlet)

1. Excavate completely around the inlet to a depth of 18" below the notch elevation.

2. Drive 2" X 4" construction grade lumber posts 1' into the ground at each corner of the inlet. Place nail strips between the posts on the ends of the inlet. Assemble the top portion of the 2" X 4" frame using the overlap joint shown on Detail 23A. The top of the frame (weir) must be 6" below adjacent roadways where flooding and safety issues may arise.

3. Stretch 1/2" X 1/2" wire mesh tightly around the frame and fasten securely. The ends must meet and overlap at a post.

4. Stretch the Geotextile Class E[23] tightly over the wire mesh with the geotextile extending from the top of the frame to 18" below the inlet notch elevation. Fasten the geotextile firmly to the frame. The ends of the geotextile must meet at a post, be overlapped and folded, then fastened down.

5. Backfill around the inlet in compacted 6" layers until the layer of earth is level with the notch elevation on the ends and top elevation on the sides.

6. If the inlet is not in a sump, construct a compacted earth dike across the ditch line directly below it. The top of the earth dike should be at least 6" higher than the top of the frame.

7. The structure must be inspected periodically and after each rain and the geotextile replaced when it becomes clogged.

B. At Grade Inlet

1. Lift grate and wrap with Geotextile Class E to completely cover all openings, then set grate back in place.

2. Place 3/4 to 1 1/2"[24] stone, 4 - 6" thick on the grate to secure the fabric and provide additional filtration.

C. Curb Inlet Protection (COG or COS Inlets)

1. Attach a continuous piece of 1/2" X 1/2" wire mesh (30" minimum width by throat length, plus 4') to the 2" x 4" weir (measuring throat length plus 2') as shown on the standard drawing.

2. Place a continuous piece of approved Geotextile Class E of the same dimensions as the wire mesh over the wire mesh and securely attach it to the 2" x 4" weir.

3. Securely nail the 2" X 4" weir to a 9" long vertical spacer to be located between the weir and the inlet face (max. 4' apart).

4. Place the assembly against the inlet throat and nail (minimum 2' lengths of 2" x 4" to the top of the weir at spacer locations). These 2" x 4" anchors shall extend across the inlet top and be held in place by sandbags or alternate weight.

5. The assembly shall be placed so that the end spacers are 1' beyond both ends of the throat opening.

[23] Refer to Table 27

[24] Refer to Table 28

6. Form the 1/2" x 1/2" wire mesh and the geotextile fabric to the concrete gutter and against the face of the curb on both sides of the inlet. Place clean 3/4" to 1 1/2" stone over the wire mesh and geotextile in such a manner as to prevent water from entering the inlet under or around the geotextile.

7. This type of protection must be inspected frequently and the geotextile fabric and stone replaced when clogged with sediment.

8. Assure that storm flow does not bypass the inlet by installing a temporary earth or asphalt dike to direct the flow to the inlet.

D. Median Inlet Protection (MIP)

1. Construct standard Slope Silt Fence having 5' post spacing 1' - 6" away from the existing inlet only on the sides of the inlet receiving sheet flow and in the location of the "wings".

2. In the location of concentrated flow, construct a stone check dam using 4" - 7" stone for the base faced on the upstream side with 3/4" - 1 ½" aggregate, 1' thick. The the stone check dam shall be 16" high with the weir 10" above the invert of the ditch or valley gutter and shall be the same width as the ditch or gutter bottom or 2' (min.). Where the end of the "wings" meet the ground shall be at or above the weir elevation.

This Page Intentionally Left Blank

DETAIL 23A - STANDARD INLET PROTECTION

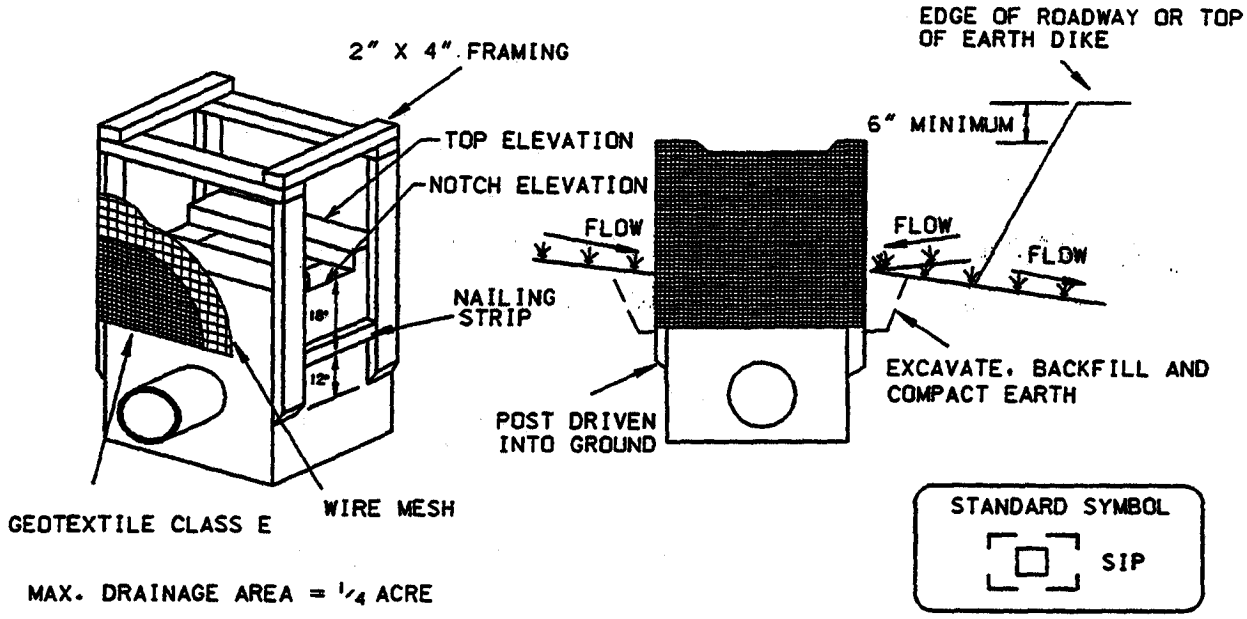

MAX. DRAINAGE AREA = 1/4 ACRE

Construction Specifications

1. Excavate completely around the inlet to a depth of 18" below the notch elevation.

2. Drive the 2" x 4" construction grade lumber posts 1' into the ground at each corner of the inlet. Place nail strips between the posts on the ends of the inlet. Assemble the top portion of the 2" x 4" frame using the overlap joint shown on Detail 23A. The top of the frame (weir) must be 6" below adjacent roadways where flooding and safety issues may arise.

3. Stretch the 1/2" x 1/2" wire mesh tightly around the frame and fasten securely. The ends must meet and overlap at a post.

4. Stretch the Geotextile Class E tightly over the wire mesh with the geotixtile extending from the top of the frame to 18" below the inlet notch elevation. Fasten the geotextile firmly to the frame. The ends of the geotextile must meet at a post. be overlapped and folded. then fastened down.

5. Backfill around the inlet in compacted 6" layers until the layer of earth is level with the notch elevation on the ends and top elevation on the sides.

6. If the inlet is not in a sump. construct a compacted earth dike across the ditch line directly below it. The top of the earth dike should be at least 6" higher than the top of the frame.

7. The structure must be inspected periodically and after each rain and the geotextile replaced when it becomes clogged.

DETAIL 23B - AT GRADE INLET PROTECTION

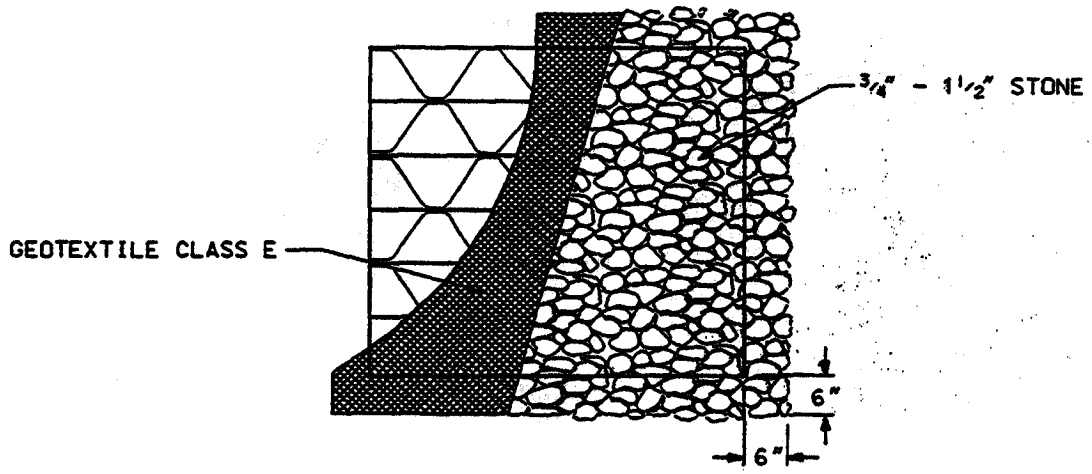

PLAN/CUT AWAY VIEW

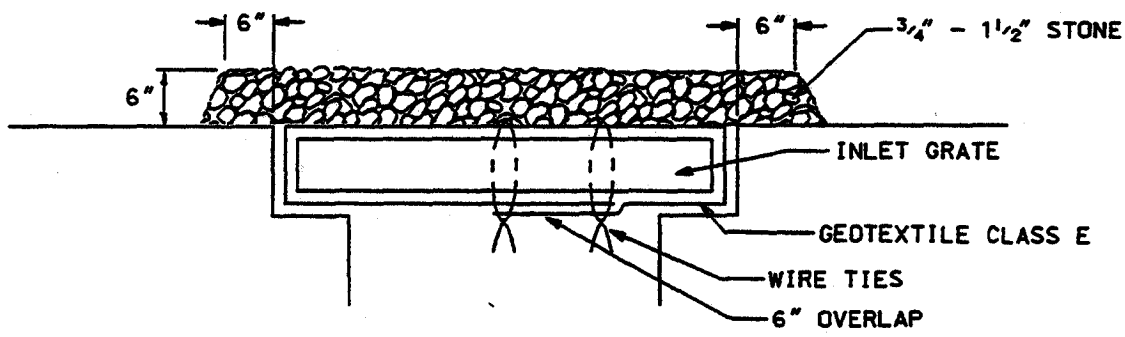

CROSS SECTION

STANDARD SYMBOL

AGIP

MAX. DRAINAGE AREA = 1/4 ACRE

Construction Specifications

1. Lift grate and wrap with Geotextile Class E to completely cover all openings. then set grate back in place.

2. Place 3/4" to 1 1/2" stone. 4"-6" thick on the grate to secure the fabric and provide additional filtration.

DETAIL 23C - CURB INLET PROTECTION (COG OR COS INLETS)

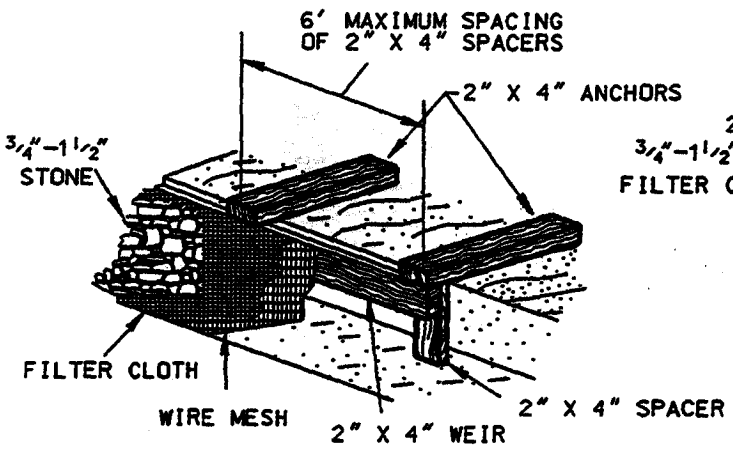

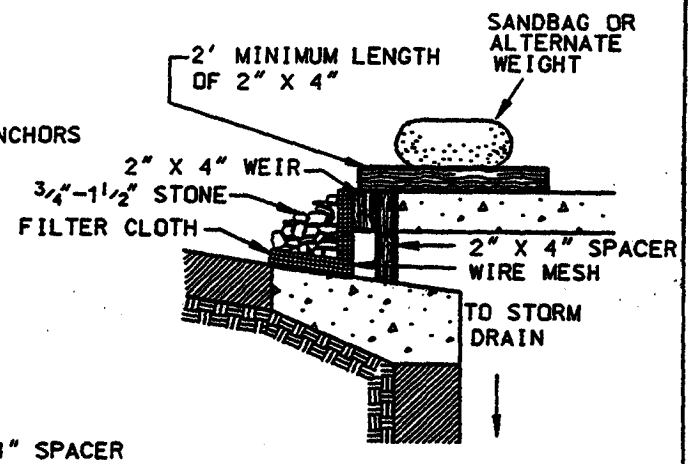

MAX. DRAINAGE AREA = 1/4 ACRE

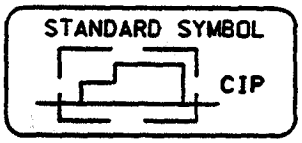

Construction Specifications

1. Attach a continuous piece of wire mesh (30" minimum width by throat length plus 4') to the 2" x 4" weir (measuring throat length plus 2') as shown on the standard drawing.

2. Place a continuous piece of Geotextile Class E the same dimensions as the wire mesh over the wire mesh and securely attach it to the 2" x 4" weir.

3. Securely nail the 2" X 4" weir to a 9" long vertical spacer to be located between the weir and the inlet face (max. 4' apart).

4. Place the assembly against the inlet throat and nail (minimum 2' lengths of 2" x 4" to the top of the weir at spacer locations). These 2" x 4" anchors shall extend across the inlet top and be held in place by sandbags or alternate weight.

5. The assembly shall be placed so that the end spacers are a minimum 1' beyond both ends of the throat opening.

6. Form the 1/2" x 1/2" wire mesh and the geotextile fabric to the concrete gutter and against the face of the curb on both sides of the inlet. Place clean 3/4" x 1 1/2" stone over the wire mesh and geotextile in such a manner to prevent water from entering the inlet under or around the geotextile.

7. This type of protection must be inspected frequently and the filter cloth and stone replaced when clogged with sediment.

8. Assure that storm flow does not bypass the inlet by installing a temporary earth or asphalt dike to direct the flow to the inlet.

DETAIL 23D - MEDIAN INLET PROTECTION

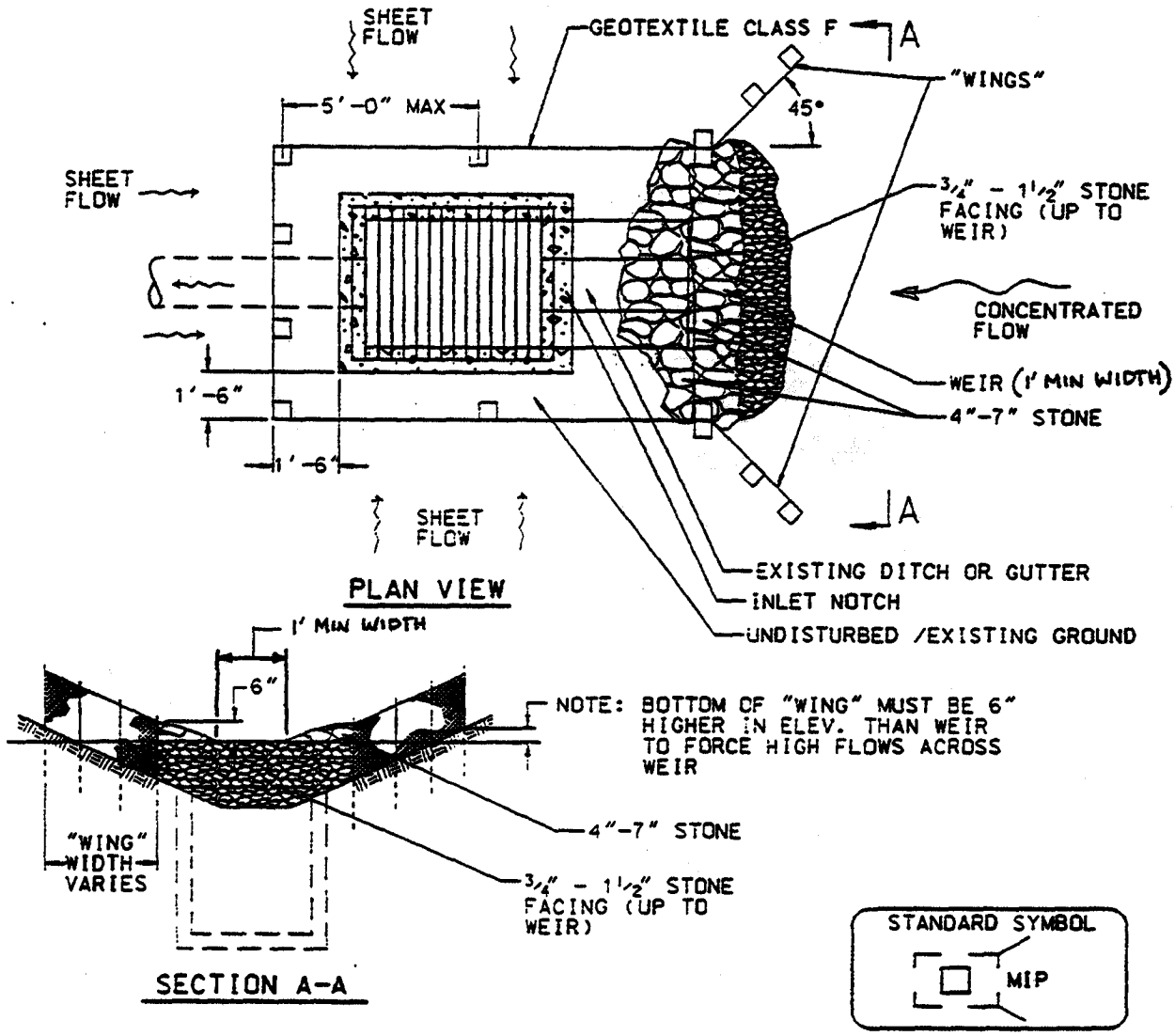

Construction Specifications

1. Fence posts shall be 36" (min.) long, driven 16" into the ground and spaced 5' (max.) apart. Wood posts shall be 1 1/2" x 1 1/2" (min.) square cut or 1 3/4" (min.) diameter round and shall be of sound quality hardwood. Steel posts shall be standard T or U section weighing not less than 1.0 #/linear foot.

2. Geotextile Class F shall be fastened securely to each post with wire ties or staples at top and mid-section.

3. Where ends of geotextile fabric come together they shall be overlapped, folded and stapled.

4. Median Inlet Protection shall be inspected after each rain and maintained when bulges occur in the fabric or when the stone gets clogged.

5. Stone used to construct the weir shall be 4" - 7" with a 1' thick layer of 3/4" - 1 1/2" stone on the upstream face.

Section F - LAND GRADING AND STRUCTURAL STABILIZATION

17.0 STANDARDS AND SPECIFICATIONS

FOR

STABILIZED CONSTRUCTION ENTRANCE

Definition

A stabilized layer of aggregate that is underlain with Geotextile Class C[25]. Stabilized entrances are located at any point where traffic enters or leaves a construction site.

Purpose

Stabilized construction entrances reduce tracking of sediment onto streets or public rights-of-way and provide a stable area for entrance or exit from the construction site.

Conditions Where Practice Applies

1. Stabilized construction entrances shall be located at points of construction ingress and egress.

2. For single family residences, the entrance should be located at the permanent driveway.

3. Stabilized construction entrances should not be used on existing pavement.

Design Criteria

1. Length - minimum of 50' (30' for single residence lot).

2. Width - 10' minimum, should be flared at the existing road to provide a turning radius.

3. Geotextile Class C shall be placed over the existing ground prior to placing stone. The plan approval authority may not require geotextile fabric for single family residences.

4. Stone - crushed aggregate (2" to 3")[26], or recycled concrete equivalent shall be placed at least 6" deep over the length and width of the entrance.

5. Surface Water - all surface water flowing to or diverted toward construction entrances shall be piped under the entrance to maintain positive drainage. Pipe installed under the construction entrance shall be protected with a mountable berm. The pipe shall be sized according to the drainage, with the min. diameter being 6". A pipe will not be necessary when the SCE is located at a high spot.

6. Location - A stabilized construction entrance shall be located at every point where construction traffic enters or leaves a construction site. Vehicles leaving the site must travel over the entire length of the stabilized construction entrance.

---

[25] Refer to Table 27.

[26] Refer to Table 28

Maintenance

The entrance shall be maintained in a condition which will minimize tracking of sediment onto public rights-of-way. This may require adding stone or other repairs as conditions demand. All sediment spilled, dropped, or tracked onto public rights-of-way must be removed immediately by vacuum sweeping, scraping, or sweeping.

When necessary, wheels shall be cleaned or washed to remove sediment prior to entrance onto public rights-of-way. When washing is required, it shall be done on an area stabilized with stone and which drains into an approved sediment trapping device. Daily inspection and maintenance is required.

Removal

After construction is complete and the site is stabilized, the stabilized construction entrance will be removed and the area stabilized unless it will be used as an underlayment for a driveway.

DETAIL 24 - STABILIZED CONSTRUCTION ENTRANCE

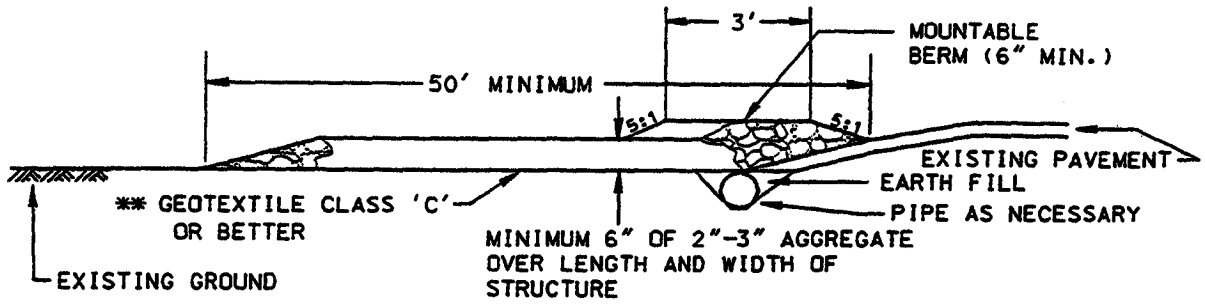

PROFILE

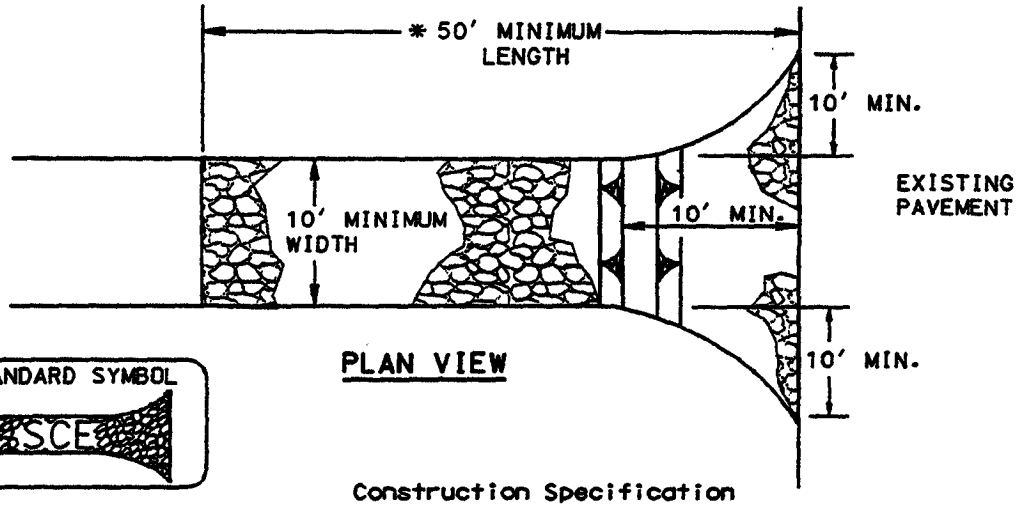

PLAN VIEW

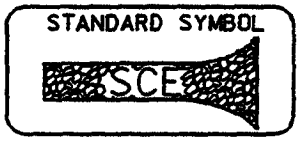

Construction Specification

1. Length - minimum of 50' (*30' for single residence lot).

2. Width - 10' minimum. should be flared at the existing road to provide a turning radius.

3. Geotextile fabric (filter cloth) shall be placed over the existing ground prior to placing stone. **The plan approval authority may not require single family residences to use geotextile.

4. Stone - crushed aggregate (2" to 3") or reclaimed or recycled concrete equivalent shall be placed at least 6" deep over the length and width of the entrance.

5. Surface Water - all surface water flowing to or diverted toward construction entrances shall be piped through the entrance. maintaining positive drainage. Pipe installed through the stabilized construction entrance shall be protected with a mountable berm with 5:1 slopes and a minimum of 6" of stone over the pipe. Pipe has to be sized according to the drainage. When the SCE is located at a high spot and has no drainage to convey a pipe will not be necessary. Pipe should be sized according to the amount of runoff to be conveyed. A 6" minimum will be required.

6. Location - A stabilized construction entrance shall be located at every point where construction traffic enters or leaves a construction site. Vehicles leaving the site must travel over the entire length of the stabilized construction entrance.

This Page Intentionally Left Blank

18.0 STANDARDS AND SPECIFICATIONS

FOR

ROCK OUTLET PROTECTION

Definition

Rock placed at the outfall of channels or culverts.

Purpose

To reduce the velocity of flow in the receiving channel to non-erosive rates.

Conditions Where Practice Applies

This practice applies where discharge velocities and energies at the outlets of culverts are sufficient to erode the next downstream reach. This applies to outlets of all types such as sediment basins, stormwater management ponds, and road culverts.

Design Criteria

The design method presented here applies to sizing rock rip-rap and gabions to protect a downstream area. It does not apply to rock lining of channels or streams. The design of rock outlet protection depends entirely on the location. Pipe outlets at the top of cuts or on slopes steeper than ten percent cannot be protected by rock aprons or rip-rap sections due to reconcentration of flows and high velocities encountered after the flow leaves the apron.

Be aware that many counties and state agencies have regulations and design procedures established for dimensions, type and size of materials, and locations where outlet protection is required.

1. Tailwater Depth

The depth of tailwater immediately below the pipe outlet must be determined for the design capacity of the pipe. If the tailwater depth is less than half the diameter of the outlet pipe and the receiving stream is wide enough to accept divergence of the flow, it shall be classified as a Minimum Tailwater Condition. If the tailwater depth is greater than half the pipe diameter and the receiving stream will continue to confine the flow, it shall be classified as a Maximum Tailwater Condition. Pipes which outlet onto flat areas with no defined channel may be assumed to have Minimum Tailwater Condition.

2. Apron Size

The apron length and width shall be determined from the curves according to the tailwater condition:

Minimum Tailwater	Use Table 19
Maximum Tailwater	Use Table 20

If the pipe discharges directly into a well-defined channel,the apron shall extend across the channel bottom and up the channel banks to an elevation one foot above the maximum tailwater depth or to the top of the bank, whichever is less. The upstream end of the apron adjacent to the pipe shall have a width two times the diameter of the outlet pipe or conform to pipe end section if used.

3. Bottom Grade

The outlet protection apron shall be constructed with no slope along its length. There shall be no obstruction at the end of the apron. The elevation of the downstream end of the apron shall be equal to the elevation of the receiving channel or adjacent ground.

4. Alignment

The outlet protection apron shall be located so that there are no bends in the horizontal alignment.

5. Materials

The outlet protection may be done using rock rip-rap, or gabions. Rip-rap shall be composed of a well-graded mixture of stone sized so that fifty (50) percent of the pieces, by weight, shall be larger than the size determined by using the charts. The minimum d_{50} size to be used shall be nine (9) inches. A well-graded mixture as used herein is defined as a mixture composed primarily of larger stone sizes but with a sufficient mixture of other sizes to fill the smaller voids between the stones. The diameter of the largest stone in such a mixture shall be 2.0 times the size selected on the chart located in the following paragraph.

6. Thickness

For SHA rip-rap specifications the following values are used:

Table 18

Rip-rap Sizes and Thicknesses (SHA Specifications)

	D_{50}	D_{100}	Thickness
Class I	9.5"	15"	19"
Class II	16"	24"	32"
Class III	23"	34"	46"

7. Stone Quality

Stone for rip-rap shall consist of field stone or rough and hewn quarry stone. The stone shall be hard and angular and of a quality that will not disintegrate on exposure to water or weathering. The specific gravity of the individual stones shall be at least 2.5. Recycled concrete equivalent may be used provided it has a density of at least 150 pounds per cubic foot and does not have any exposed steel or reinforcing bars.

8. Filter

A filter is a layer of material placed between the rip-rap and the underlaying soil surface to prevent soil movement into and through the rip-rap to prevent piping, reduce uplift pressure, and collect water. Rip-rap shall have a filter placed under it in all cases. A filter can be of two general forms: a gravel layer or a Geotextile Class C[27].

9. Gabions

Gabion baskets may be used as rock outlet protection, provided they are made of hexagonal triple twist mesh with heavily galvanized steel wire. The maximum lined dimension of the mesh opening shall not exceed 4 1/2 inches. The area of the mesh opening shall not exceed ten (10) square inches. Gabions shall be fabricated in such a manner that the sides, ends, and lid can be assembled at the construction site into a rectangular basket of the specified sizes. Gabions shall be of single unit construction and shall be installed according to the manufacturer's specifications. The area on which the gabion is to be installed shall be graded as shown on the drawings. Foundation conditions shall be the same as for placing rock rip-rap. Geotextile Class C shall be placed under all gabions. Gabions must be keyed in to prevent undermining of the main gabion structure. Refer to Table 28 for Gabion stone sizes.

Maintenance

Once a rip-rap outlet has been installed, the maintenance needs are very low. It should be inspected after high flows to see if scour beneath the rip-rap has occurred or if any stones have been dislodged. Repairs should be made immediately.

Design Procedure

1. Investigate the downstream channel to assure that non-erosive velocities can be maintained.

2. Determine the tailwater condition at the outlet to establish which curve to use.

3. Enter the appropriate chart with the depth of flow and discharge velocity to determine the rip-rap size and apron length required. References to pipe diameters in the charts are based on full flow. For other than full pipe flow, the parameters of depth of flow and velocity must be used.

4. Calculate apron width at the downstream end if a flared section is to be employed.

Examples

Example 1: Pipe Flow (Full) with Discharge to Unconfined Section :

Q = 280 cfs, diameter = 66", tailwater is 2' above pipe invert (min. tailwater condition).

Read d_{50} = 1.2 feet, and apron length = 38 feet.

Apron width = diameter + L a = 5.5 + 38 = 43.5 feet.

[27] Refer to Table 27

Example 2: Box Flow (Partial) with High Tailwater:

A box culvert is flowing under partial flow conditions:

A concrete box 5.5 feet x 10 feet is flowing 5.0 deep; Q = 600 cfs, and tailwater (surface) is 5' above invert (maximum tailwater condition);

V = Q/A = 600/(5 x 10) = 12 fps

At the intersection of the curve, d = 60 inches, V = 12 fps, read d_{50} = 0.4 feet. Since d_{50} 9 inches, use d_{50} = 9 inches.

Then reading to the d = 60 inch curve, read apron length = 40 feet.

Apron width, W = conduit width + 0.04 L a = 10 + (0.4)(40) = 26 feet.

Example 3: Open Channel Flow with Discharge to Unconfined Section:

A trapezoidal concrete channel 5 feet wide with 2:1 side slopes is flowing 2 feet deep;

Q = 180 cfs (velocity = 10 fps); and the tailwater (surface) downstream is 0.8 foot (minimum tail water condition).

At the intersection of the curve, d = 24 inches, V = 10 fps, read d_{50} = 0.7 feet. Since d_{50} 9 inches, use d_{50} = 9 inches.

Then reading to the d = 24 inch curve, read apron length = 22 feet.
Apron width, W = bottom of width of channel + L a = 5 + 22 = 27 feet.

Example 4: Pipe Flow (Partial) with Discharge to a Confined Section:

A 48 inch pipe is discharging with a depth of 3 feet;

Q = 100 cfs and the discharge velocity of 10 fps (established from partial flow analysis) to a confined trapezoidal channel with a 2 foot bottom, 2:1 side slopes, n =.04, and a grade of 0.6 %.

Calculation of the downstream channel (Manning's Equation) indicates a normal depth of 3.1 feet and a normal velocity of 3.0 fps. Since the receiving channel is confined, the maximum tailwater condition controls.

At the intersection of the curve, d = 36 inches, and V = 10 fps, read d50 = 0.3 feet.

Since d_{50} 9 inches, use d_{50} = 9 inches.

Then reading to the d = 36 inch curve, read apron length = 30 feet.

Since the maximum flow depth in this reach is 3.1 feet, then the minimum depth of the rip-rap must be 4.1 feet.

Construction Specifications

1. The subgrade for the filter, rip-rap, or gabion shall be prepared to the required lines and grades. Any fill required in the subgrade shall be compacted to a density of approximately that of the surrounding undisturbed material.

2. The rock or gravel shall conform to the specified grading limits when installed respectively in the rip-rap or filter.

3. Geotextile Class C[28] or better shall be protected from punching, cutting, or tearing. Any damage other than an occasional small hole shall be repaired by placing another piece of geotextile fabric over the damaged part or by completely replacing the geotextile fabric. All overlaps whether for repairs or for joining two pieces of geotextile fabric shall be a minimum of one foot.

4. Stone for the rip-rap or gabion outlets may be placed by equipment. They shall be constructed to the full course thickness in one operation and in such a manner as to avoid displacement of underlying materials. The stone for rip-rap or gabion outlets shall be delivered and placed in a manner that will ensure that it is reasonably homogenous with the smaller stones and spalls filling the voids between the larger stones. Rip-rap shall be placed in a manner to prevent damage to the filter blanket or geotextile fabric. Hand placement will be required to the extent necessary to prevent damage to the permanent works.

5. The stone shall be placed so that it blends in with the existing ground. If the stone is placed too high then the flow will be forced out of the channel and scour adjacent to the stone will occur.

[28] Refer to Table 27

Table 19

DESIGN OF OUTLET PROTECTION
MINIMUM TAILWATER CONDITION (Tw <0.5 diam.)

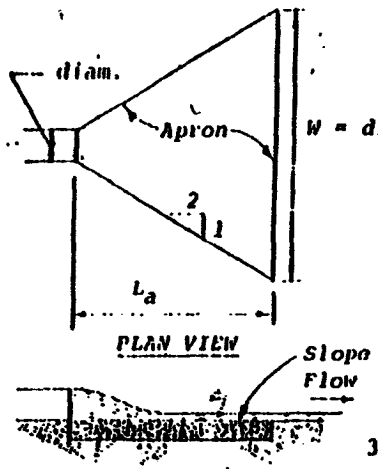

Median stone diameter, d50, is the stone size which 50% of the riprap mixture, by weight, is larger than.

Velocities shown are for pipes flowing full.

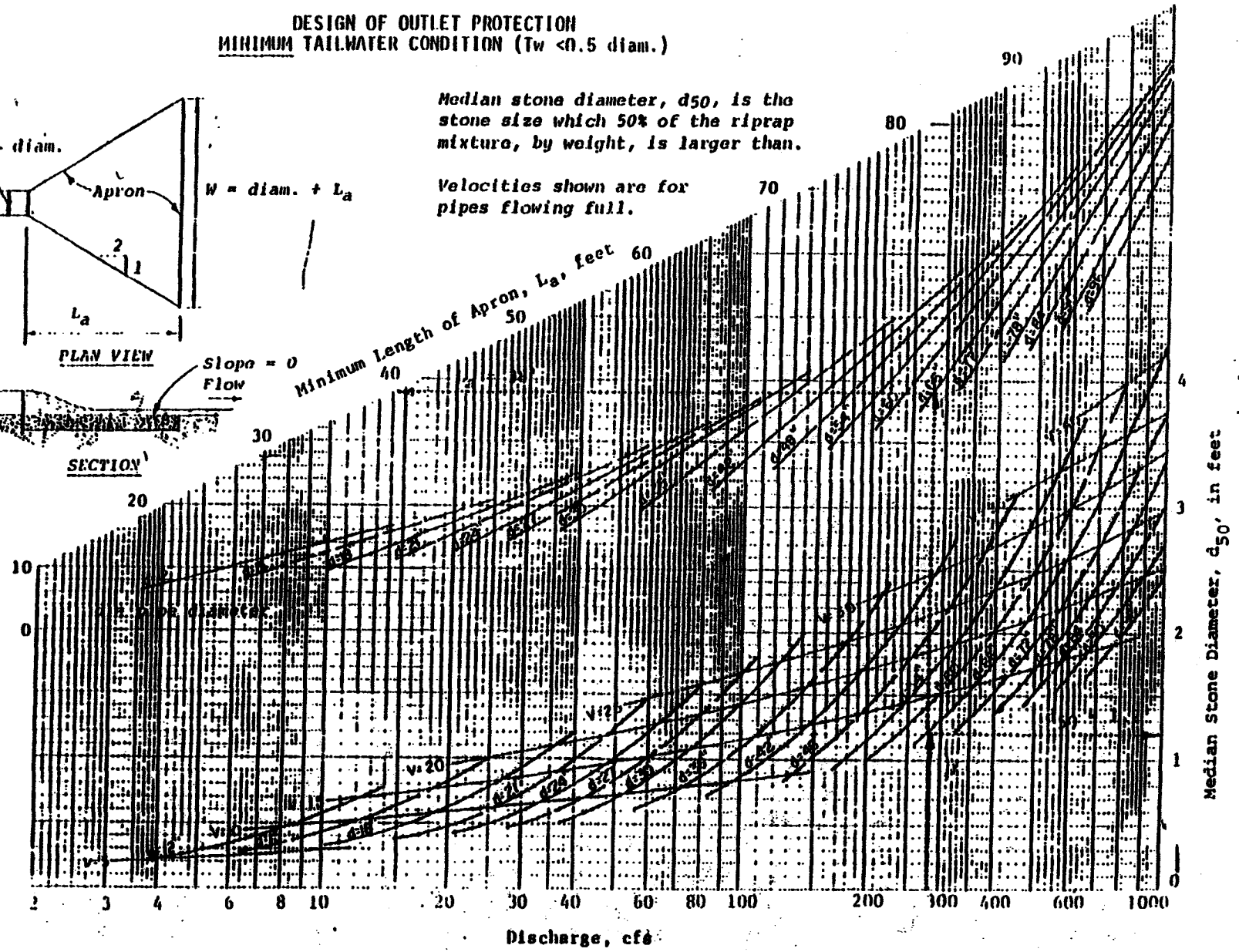

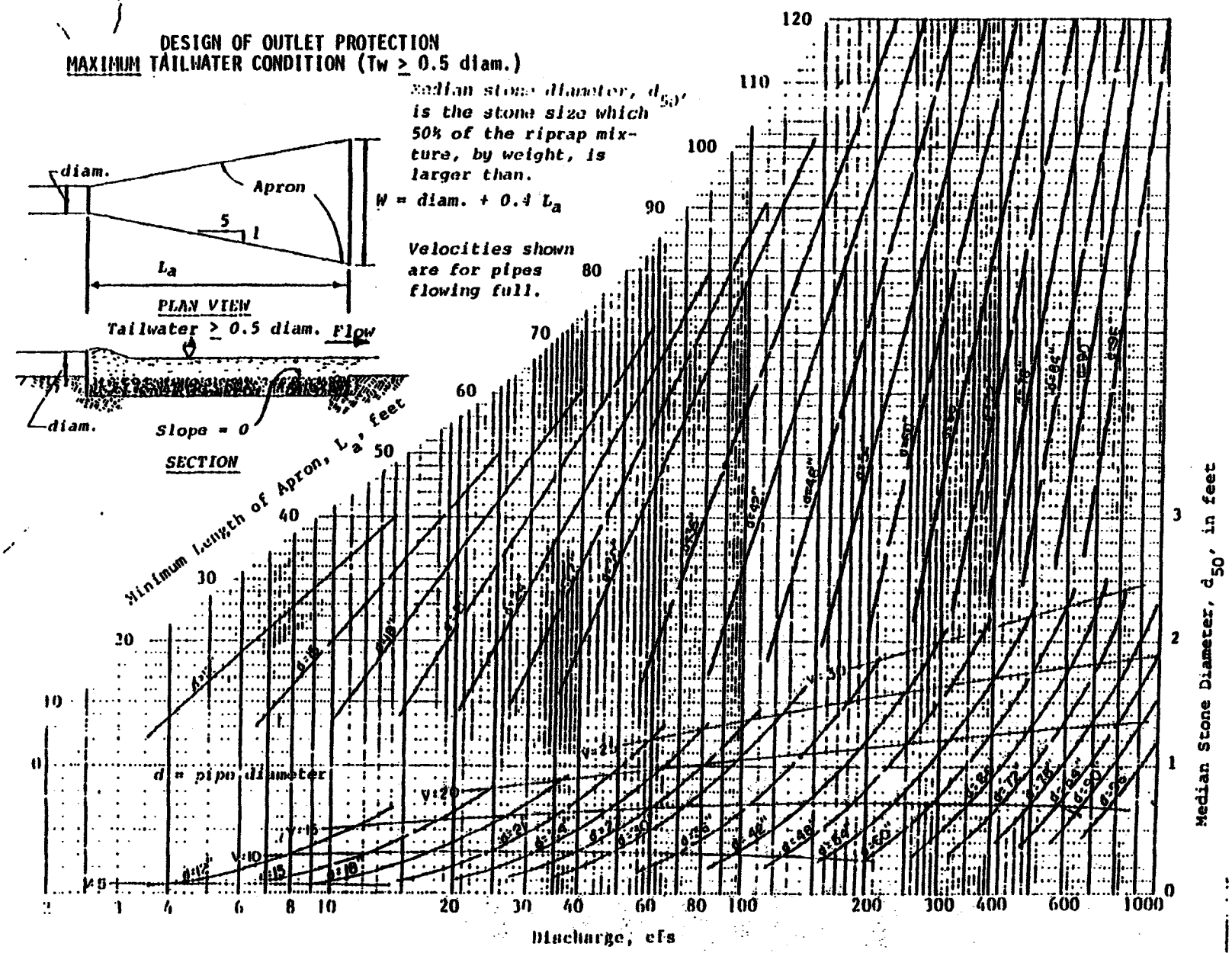
DESIGN OF OUTLET PROTECTION
MAXIMUM TAILWATER CONDITION (Tw ≥ 0.5 diam.)
Median stone diameter, d_{50}, is the stone size which 50% of the riprap mixture, by weight, is larger than.
W = diam. + 0.4 L_a
Velocities shown are for pipes flowing full.
diam.
Apron
5
1
L_a
PLAN VIEW
Tailwater ≥ 0.5 diam.
Flow
diam.
Slope = 0
SECTION
Minimum Length of Apron, L_a, feet
d = pipe diameter
Discharge, cfs
Median Stone Diameter, d_{50}, in feet

DETAIL 25 - ROCK OUTLET PROTECTION I

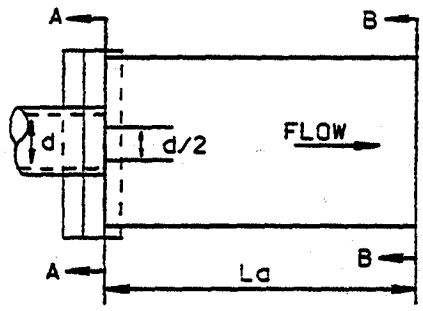

DISCHARGE TO SEMI CONFINED SECTION (MAXIMUM TAILWATER CONDITION)

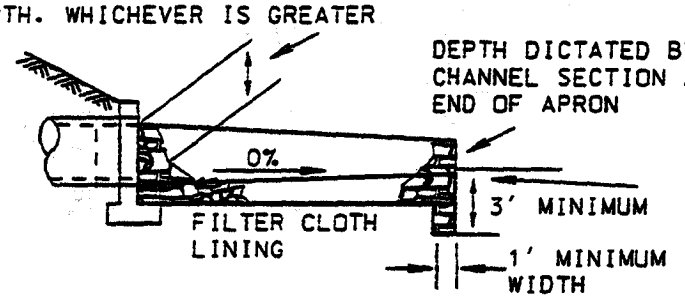

NOTE: FILTER CLOTH MUST EXTEND A MINIMUM OF 6" BEYOND APRON AND SIDES

CHANNEL CROSS SECTION WILL VARY FROM A-A TO B-B

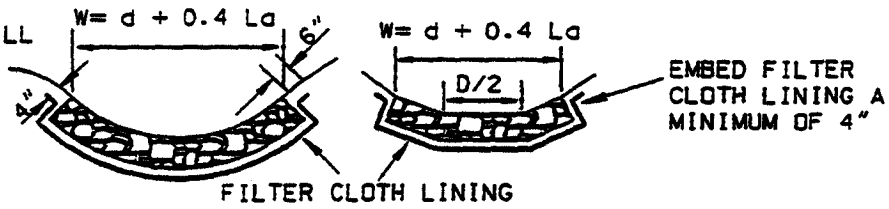

SECTION B-B SECTION A-A

ROCK OUTLET PROTECTION I

Construction Specifications

1. The subgrade for the filter, rip-rap, or gabion shall be prepared to the required lines and grades. Any fill required in the subgrade shall be compacted to a density of approximately that of the surrounding undisturbed material.

2. The rock or gravel shall conform to the specified grading limits when installed respectively in the rip-rap or filter.

3. Geotextile shall be protected from punching, cutting, or tearing. Any damage other than an occasional small hole shall be repaired by placing another piece of geotextile over the damaged part or by completely replacing the geotextile. All overlaps whether for repairs or for joining two pieces of geotextile shall be a minimum of one foot.

4. Stone for the rip-rap or gabion outlets may be placed by equipment. They shall be constructed to the full course thickness in one operation and in such a manner as to avoid displacement of underlying materials. The stone for rip-rap or gabion outlets shall be delivered and placed in a manner that will ensure that it is reasonably homogeneous with the smaller stones and spalls filling the voids between the larger stones. Rip-rap shall be placed in a manner to prevent damage to the filter blanket or geotextile. Hand placement will be required to the extent necessary to prevent damage to the permanent works.

5. The stone shall be placed so that it blends in with the existing ground. If the stone is placed too high then the flow will be forced out of the channel and scour adjacent to the stone will occur.

DETAIL 26 - ROCK OUTLET PROTECTION II

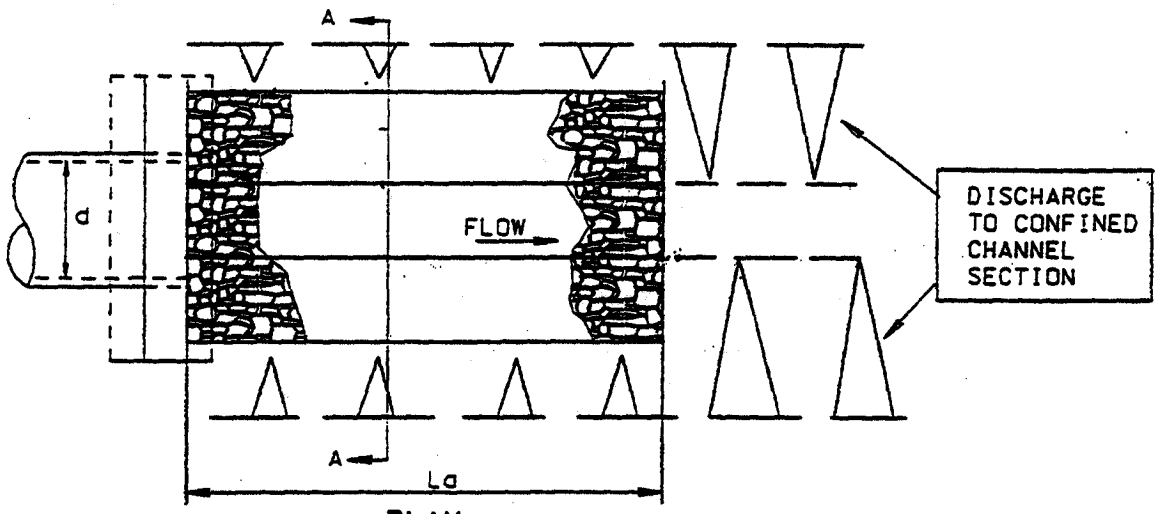

PLAN

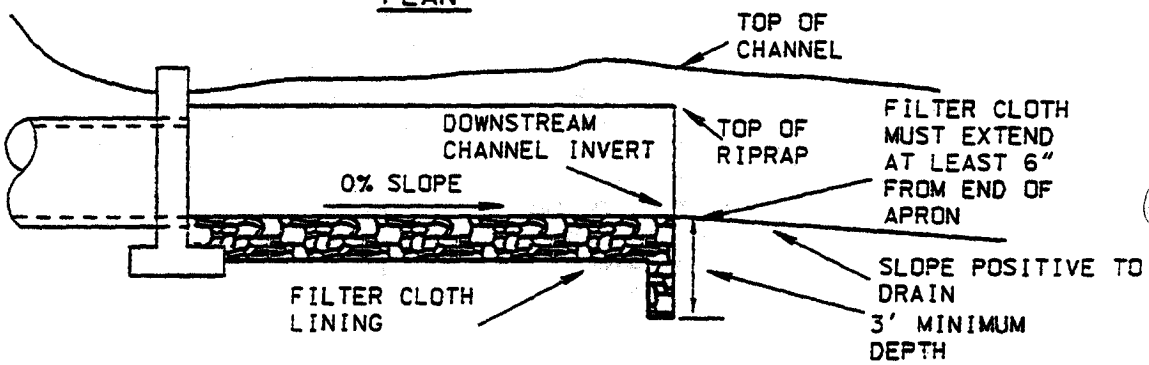

ELEVATION

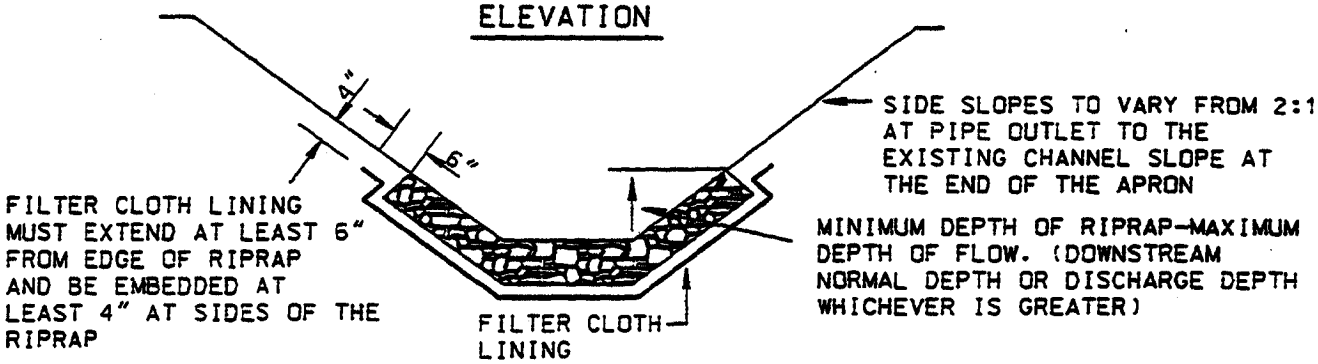

SECTION A-A

ROCK OUTLET PROTECTION II

Construction Specifications

1. The subgrade for the filter, rip-rap, or gabion shall be prepared to the required lines and grades. Any fill required in the subgrade shall be compacted to a density of approximately that of the surrounding undisturbed material.

2. The rock or gravel shall conform to the specified grading limits when installed respectively in the rip-rap or filter.

3. Geotextile shall be protected from punching, cutting, or tearing. Any damage other than an occasional small hole shall be repaired by placing another piece of geotextile over the damaged part or by completely replacing the geotextile. All overlaps whether for repairs or for joining two pieces of geotextile shall be a minimum of one foot.

4. Stone for the rip-rap or gabion outlets may be placed by equipment. They shall be constructed to the full course thickness in one operation and in such a manner as to avoid displacement of underlying materials. The stone for rip-rap or gabion outlets shall be delivered and placed in a manner that will ensure that it is reasonably homogeneous with the smaller stones and spalls filling the voids between the larger stones. Rip-rap shall be placed in a manner to prevent damage to the filter blanket or geotextile. Hand placement will be required to the extent necessary to prevent damage to the permanent works.

5. The stone shall be placed so that it blends in with the existing ground. If the stone is placed too high then the flow will be forced out of the channel and scour adjacent to the stone will occur.

DETAIL 27 - ROCK OUTLET PROTECTION III

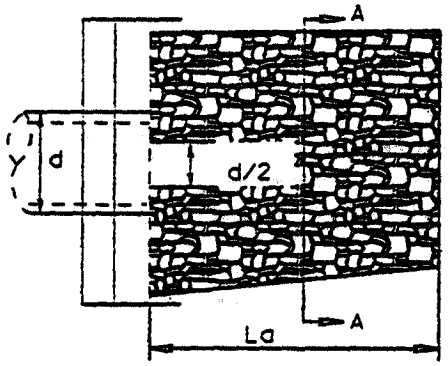

PLAN

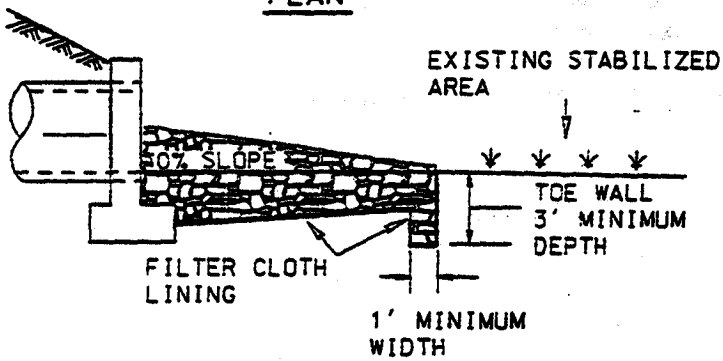

ELEVATION

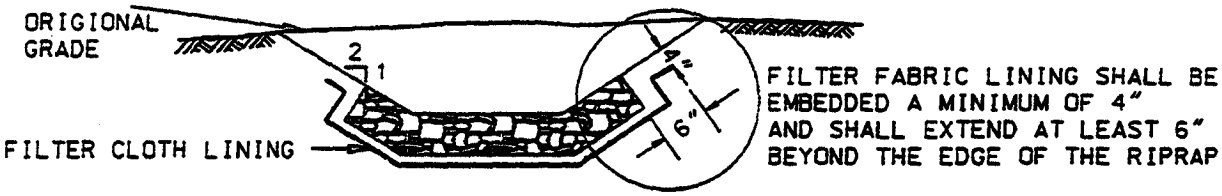

SECTION A-A

ROCK OUTLET PROTECTION III

Construction Specifications

1. The subgrade for the filter, rip-rap, or gabion shall be prepared to the required lines and grades. Any fill required in the subgrade shall be compacted to a density of approximately that of the surrounding undisturbed material.

2. The rock or gravel shall conform to the specified grading limits when installed respectively in the rip-rap or filter.

3. Geotextile shall be protected from punching, cutting, or tearing. Any damage other than an occasional small hole shall be repaired by placing another piece of geotextile over the damaged part or by completely replacing the geotextile. All overlaps whether for repairs or for joining two pieces of geotextile shall be a minimum of one foot.

4. Stone for the rip-rap or gabion outlets may be placed by equipment. They shall be constructed to the full course thickness in one operation and in such a manner as to avoid displacement of underlying materials. The stone for rip-rap or gabion outlets shall be delivered and placed in a manner that will ensure that it is reasonably homogeneous with the smaller stones and spalls filling the voids between the larger stones. Rip-rap shall be placed in a manner to prevent damage to the filter blanket or geotextile. Hand placement will be required to the extent necessary to prevent damage to the permanent works.

5. The stone shall be placed so that it blends in with the existing ground. If the stone is placed too high then the flow will be forced out of the channel and scour adjacent to the stone will occur.

19.0 STANDARDS AND SPECIFICATIONS

FOR

LAND GRADING

Definition

Reshaping of the existing land surface in accordance with a plan as determined by engineering survey and layout.

Purpose

The purpose of a land grading specification is to provide for erosion control and vegetative establishment on those areas where the existing land surface is to be reshaped by grading according to plan.

Design Criteria

The grading plan should be based upon the incorporation of building designs and street layouts that fit and utilize existing topography and desirable natural surroundings to avoid extreme grade modifications. Information submitted must provide sufficient topographic surveys and soil investigations to determine limitations that must be imposed on the grading operation related to slope stability, effect on adjacent properties and drainage patterns, measures for drainage and water removal and vegetative treatment, etc.

Many counties have regulations and design procedures already established for land grading and cut and fill slopes. Where these requirements exist, they shall be followed. The plan must show existing and proposed contours of the area(s) to be graded. The plan shall also include practices for erosion control, slope stabilization, safe disposal of runoff water and drainage, such as waterways, lined ditches, reverse slope benches (include grade and cross section), grade stabilization structures, retaining walls, and surface and subsurface drains. The plan shall also include phasing of these practices. The following shall be incorporated into the plan:

1. Provisions shall be made to safely conduct surface runoff to storm drains, protected outlets or to stable water courses to insure that surface runoff will not damage slopes or other graded areas.

2. Cut and fill slopes that are to be stabilized with grasses shall not be steeper than 2:1. (Where the slope is to be mowed the slope should be no steeper than 3:1; 4:1 is preferred because of safety factors related to mowing steep slopes.) Slopes exceeding 2:1 shall require special design and stabilization considerations that shall be adequately shown on the plans.

3. Reverse benches shall be provided whenever the vertical interval (height) of any 2:1 slope exceeds 20 feet; for 3:1 slope it shall be increased to 30 feet and for 4:1 to 40 feet. Benches shall be located to divide the slope face as equally as possible and shall convey the water to a stable outlet. Soils, seeps, rock outcrops , etc., shall also be taken into consideration when designing benches.

   a. Benches shall be a minimum of six-feet wide to provide for ease of maintenance.

   b. Benches shall be designed with a reverse slope of 6:1 or flatter to the toe of the upper slope and with a minimum of one foot in depth. Bench gradient to the outlet shall be between 2 percent and 3 percent, unless accompanied by appropriate design and computations.

c. The flow length within a bench shall not exceed 800' unless accompanied by appropriate design and computations. For flow channel stabilization see temporary swale.

4. Surface water shall be diverted from the face of all cut and/or fill slopes by the use of earth dikes, ditches and swales or conveyed downslope by the use of a designed structure, except where:

a. The face of the slope is or shall be stabilized and the face of all graded slopes shall be protected from surface runoff until they are stabilized.

b. The face of the slope shall not be subject to any concentrated flows of surface water such as from natural drainageways, graded swales, downspouts, etc.

c. The face of the slope will be protected by special erosion control materials, to include, but not limited to: approved vegetative stabilization practices (see section G), rip-rap or other approved stabilization methods.

5. Cut slopes occurring in ripable rock shall be serrated as shown on the following diagram. These serrations shall be made with conventional equipment as the excavation is made. Each step or serration shall be constructed on the contour and will have steps cut at nominal two-foot intervals with nominal three-foot horizontal shelves. These steps will vary depending on the slope ratio or the cut slope. The nominal slope line is 1:1. These steps will weather and act to hold moisture, lime, fertilizer and seed thus producing a much quicker and longer lived vegetative cover and better slope stabilization. Overland flow shall be diverted from the top of all serrated cut slopes and carried to a suitable outlet.

6. Subsurface drainage shall be provided where necessary to intercept seepage that would otherwise adversely affect slope stability or create excessively wet site conditions.

7. Slopes shall not be created so close to property lines as to endanger adjoining properties without adequately protecting such properties against sedimentation, erosion, slippage, settlement, subsidence or other related damages.

8. Fill material shall be free of brush, rubbish, rocks, logs, stumps, building debris, and other objectionable material. It should be free of stones over two (2) inches in diameter where compacted by hand or mechanical tampers or over eight (8) inches in diameter where compacted by rollers or other equipment.Frozen material shall not be placed in the fill nor shall the fill material be placed on a frozen foundation.

9. Stockpiles, borrow areas and spoil shall be shown on the plans and shall be subject to the provisions of this Standard and Specifications.

10. All disturbed areas shall be stabilized structurally or vegetatively in compliance with <u>20.0 Standards and Specifications for Vegetative Stabilization</u>.

DETAIL 28 - BENCHED SLOPES

SLOPE X:1	Y (MAX)
2	20'
3	30'
4	40'

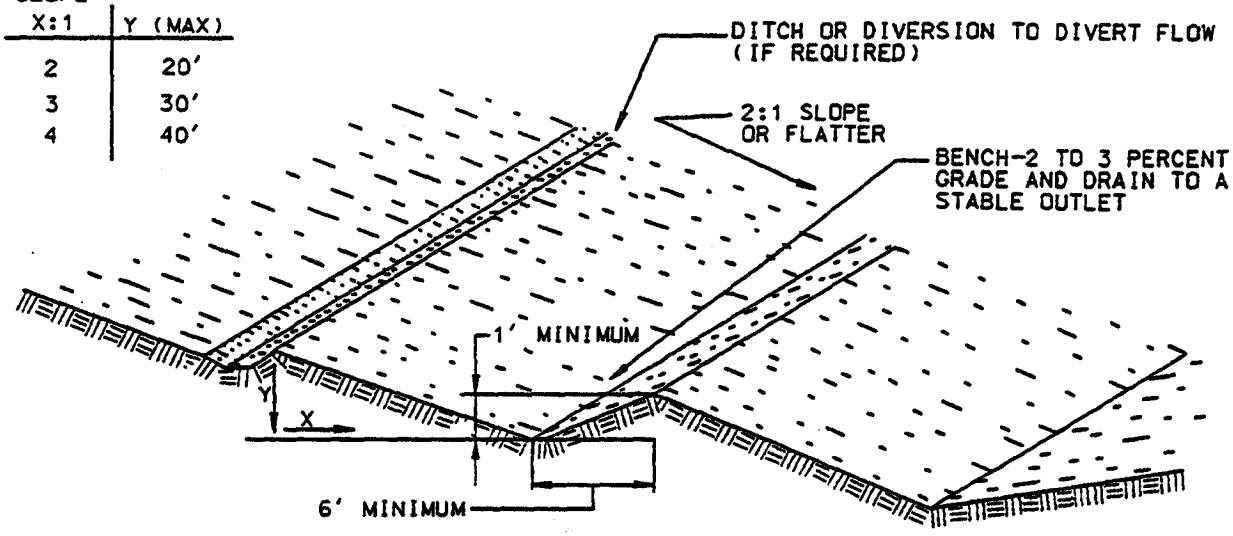

Construction Specifications

1. All fills shall be compacted as required to reduce erosion, slippage, settlement, subsidence or other related problems. Fill intended to support buildings, structures and conduits, etc., shall be compacted in accordance with local requirements or codes.

2. All fill shall be placed and compacted in layers not to exceed 8" in thickness.

3. Except for approved landfills or nonstructural fills, fill material shall be free of brush, rubbish, rocks, logs, stumps, building debris and other objectionable materials that would interfere with or prevent construction of satisfactory fills.

4. Frozen material or soft, mucky or highly compressible materials shall not be incorporated into fill slopes or structural fills. Fill shall not be placed on a frozen foundation.

5. All benches shall be kept free of sediment during all phases of development.

6. Seeps or springs encountered during construction shall be handled in accordance with the Standard and Specification for Subsurface Drain or other approved methods.

7. All graded areas shall be permanently stabilized immediately following finished grading.

DETAIL 29 - SERRATED SLOPES

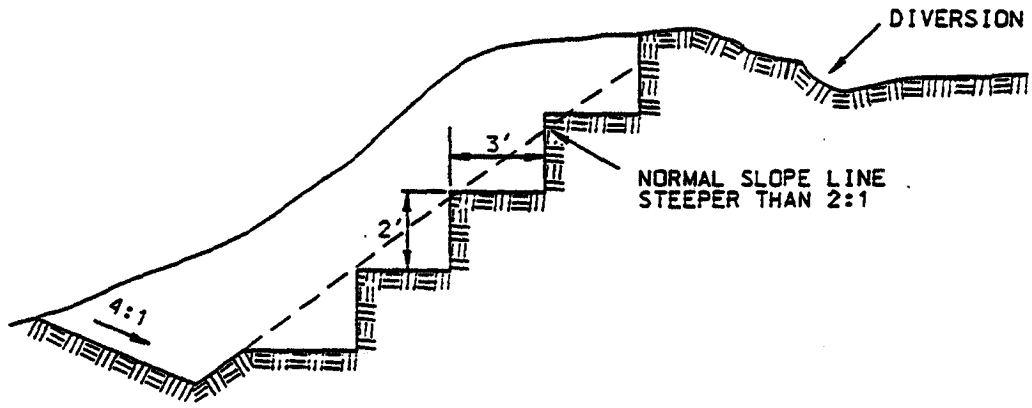

TYPICAL SECTION

Construction Specifications

1. All fills shall be compacted as required to reduce erosion, slippage, settlement, subsidence or other related problems. Fill intended to support buildings, structures and conduits, etc., shall be compacted in accordance with local requirements or codes.

2. All fill shall be placed and compacted in layers not to exceed 8" in thickness.

3. Except for approved landfills or nonstructural fills, fill material shall be free of brush, rubbish, rocks, logs, stumps, building debris and other objectionable materials that would interfere with or prevent construction of satisfactory fills.

4. Frozen material or soft, mucky or highly compressible materials shall not be incorporated into fill slopes or structural fills. Fill shall not be placed on a frozen foundation.

5. All benches shall be kept free of sediment during all phases of development.

6. Seeps or springs encountered during construction shall be handled in accordance with the Standard and Specification for Subsurface Drain or other approved methods.

7. All graded areas shall be permanently stabilized immediately following finished grading.

Section G - VEGETATIVE PRACTICES

20.0 STANDARDS AND SPECIFICATIONS

FOR

VEGETATIVE STABILIZATION

Definition

Using vegetation as cover for barren soil to protect it from forces that cause erosion.

Purpose

Vegetative Stabilization specifications are used to promote the establishment of vegetation on exposed soil. When soil is stabilized with vegetation, the soil is less likely to erode and more likely to allow infiltration of rainfall, thereby reducing sediment loads and runoff to downstream areas, and improving wildlife habitat and visual resources.

Conditions Where Practice Applies

This practice shall be used on denuded areas as specified on the plans and may be used on highly erodible or critically eroding areas. This specification is divided into Temporary Seeding, to quickly establish vegetative cover for short duration (up to one year), and Permanent Seeding, for long term vegetative cover. Examples of applicable areas for Temporary Seeding are temporary soil stockpiles, cleared areas being left idle between construction phases, earth dikes, etc. and for Permanent Seeding are lawns, dams, cut and fill slopes and other areas at final grade, former stockpile and staging areas, etc.

Effects on Water Quality and Quantity

Planting vegetation in disturbed areas will have an effect on the water budget, especially on volumes and rates of runoff, infiltration, evaporation, transpiration, percolation, and groundwater recharge. Vegetation, over time, will increase organic matter content and improve the water holding capacity of the soil and subsequent plant growth.

Vegetation will help reduce the movement of sediment, nutrients, and other chemicals carried by runoff to receiving waters. Plants will also help protect groundwater supplies by assimilating those substances present within the root zone.

Sediment control devices must remain in place during grading, seedbed preparation, seeding, mulching and vegetative establishment to prevent large quantities of sediment and associated chemicals and nutrients from washing into surface waters.

Section I - Vegetative Stabilization Methods and Materials

A. Site Preparation

i. Install erosion and sediment control structures (either temporary or permanent) such as diversions, grade stabilization structures, berms, waterways, or sediment control basins.

ii. Perform all grading operations at right angles to the slope. Final grading and shaping is not usually necessary for temporary seeding.

iii. Schedule required soil tests to determine soil amendment composition and application rates for sites having disturbed area over 5 acres.

B. Soil Amendments (Fertilizer and Lime Specifications)

i. Soil tests must be performed to determine the exact ratios and application rates for both lime and fertilizer on sites having disturbed areas over 5 acres. Soil analysis may be performed by the University of Maryland or a recognized commercial laboratory. Soil samples taken for engineering purposes may also be used for chemical analyses.

ii. Fertilizers shall be uniform in composition, free flowing and suitable for accurate application by approved equipment. Manure may be substituted for fertilizer with prior approval from the appropriate approval authority. Fertilizers shall all be delivered to the site fully labeled according to the applicable state fertilizer laws and shall bear the name, trade name or trademark and warrantee of the producer.

iii. Lime materials shall be ground limestone (hydrated or burnt lime may be substituted) which contains at least 50% total oxides (calcium oxide plus magnesium oxide). Limestone shall be ground to such fineness that at least 50% will pass through a #100 mesh sieve and 98 - 100% will pass through a #20 mesh sieve.

iv. Incorporate lime and fertilizer into the top 3 - 5" of soil by disking or other suitable means.

C. Seedbed Preparation

i. Temporary Seeding

a. Seedbed preparation shall consist of loosening soil to a depth of 3" to 5" by means of suitable agricultural or construction equipment, such as disc harrows or chisel plows or rippers mounted on construction equipment. After the soil is loosened it should not be rolled or dragged smooth but left in the roughened condition. Sloped areas (greater than 3:1) should be tracked leaving the surface in an irregular condition with ridges running parallel to the contour of the slope.

b. Apply fertilizer and lime as prescribed on the plans.

c. Incorporate lime and fertilizer into the top 3 - 5" of soil by disking or other suitable means.

ii. Permanent Seeding

a. Minimum soil conditions required for permanent vegetative establishment:

1. Soil pH shall be between 6.0 and 7.0
2. Soluble salts shall be less than 500 parts per million (ppm).
3. The soil shall contain less than 40% clay but enough fine grained material (> 30% silt plus clay) to provide the capacity to hold a moderate amount of moisture. An exception is if lovegrass or serecia lespedeza is to be planted, then a sandy soil (< 30% silt plus clay) would be acceptable.
4. Soil shall contain 1.5% minimum organic matter by weight.
5. Soil must contain sufficient pore space to permit adequate root penetration.
6. If these conditions cannot be met by soils on site, adding topsoil is required in accordance with Section 21 Standard and Specification for Topsoil.

b. Areas previously graded in conformance with the drawings shall be maintained in a true and even grade, then scarified or otherwise loostened to a depth of 3 - 5" to permit bonding of the topsoil to the surface area and to create horizontal erosion check slots to prevent topsoil from sliding down a slope.

c. Apply soil amendments as per soil test or as included on the plans.

d. Mix soil amendments into the top 3 - 5" of topsoil by disking or other suitable means. Lawn areas should be raked to smooth the surface, remove large objects like stones and branches, and ready the area for seed application. Where site conditions will not permit normal seedbed preparation, loosen surface soil by dragging with a heavy chain or other equipment to roughen the surface. Steep slopes (steeper than 3:1) should be tracked by a dozer leaving the soil in an irregular condition with ridges running parallel to the contour of the slope. The top 1 - 3" of soil should be loose and friable. Seedbed loosening may not be necessary on newly disturbed areas.

D. Seed Specifications

i. All seed must meet the requirements of the Maryland State Seed Law. All seed shall be subject to re-testing by a recognized seed laboratory. All seed used shall have been tested within the 6 months immediately preceding the date of sowing such material on this job.

Note: Seed tags shall be made available to the inspector to verify type and rate of seed used.

ii. Inoculant - The inoculant for treating legume seed in the seed mixtures shall be a pure culture of nitrogen-fixing bacteria prepared specifically for the species. Inoculants shall not be used later than the date indicated on the container. Add fresh inoculant as directed on package. Use four times the recommended rate when hydroseeding. Note: It is very important to keep inoculant as cool as possible until used. Temperatures above 75-80^0 F. can weaken bacteria and make the inoculant less effective.

E. Methods of Seeding

i. Hydroseeding: Apply seed uniformly with hydroseeder (slurry includes seed and fertilizer), broadcast or drop seeder, or a cultipacker seeder.

a. If fertilizer is being applied at the time of seeding, the application rates amounts will not exceed the following: nitrogen; maximum of 100 lbs. per acre total of soluble nitrogen; P205 (phosphorous): 200 lbs/ac; K20 (potassium): 200 lbs/ac.

b. Lime - use only ground agricultural limestone, (Up to 3 tons per acre may be applied by hydroseeding). Normally, not more than 2 tons are applied by hydroseeding at any one time. Do not use burnt or hydrated lime when hydroseeding.

c. Seed and fertilizer shall be mixed on site and seeding shall be done immediately and without interruption.

ii. Dry Seeding: This includes use of conventional drop or broadcast spreaders.

a. Seed spread dry shall be incorporated into the subsoil at the rates prescribed on the Temporary or Permanent Seeding Summaries or Tables 25 or 26. The seeded area shall then be rolled with a weighted roller to provide good seed to soil contact.

b. Where practical, seed should be applied in two directions perpendicular to each other. Apply half the seeding rate in each direction.

iii. Drill or Cultipacker Seeding: Mechanized seeders that apply and cover seed with soil.

a. Cultipacking seeders are required to bury the seed in such a fashion as to provide at least 1/4 inch of soil covering. Seedbed must be firm after planting.

b. Where practical, seed should be applied in two directions perpendicular to each other. Apply half the seeding rate in each direction.

F. Mulch Specifications (In order of preference)

i. Straw shall consist of thoroughly threshed wheat, rye or oat straw, reasonably bright in color, and shall not be musty, moldy, caked, decayed, or excessively dusty and shall be free of noxious weed seeds as specified in the Maryland Seed Law.

ii. Wood Cellulose Fiber Mulch (WCFM)

a. WCFM shall consist of specially prepared wood cellulose processed into a uniform fibrous physical state.

b. WCFM shall be dyed green or contain a green dye in the package that will provide an appropriate color to facilitate visual inspection of the uniformly spread slurry.

c. WCFM, including dye, shall contain no germination or growth inhibiting factors.

d. WCFM materials shall be manufactured and processed in such a manner that the wood cellulose fiber mulch will remain in uniform suspension in water under agitation and will blend with seed, fertilizer and other additives to form a homogeneous slurry. The mulch material shall form a blotter-like ground cover, on application, having moisture absorption and percolation properties and shall cover and hold grass seed in contact with the soil without inhibiting the growth of the grass seedlings.

e. WCFM material shall contain no elements or compounds at concentration levels that will be phyto-toxic.

f. WCFM must conform to the following physical requirements: fiber length to approximately 10 mm., diameter approximately 1 mm., pH range of 4.0 to 8.5, ash content of 1.6% maximum and water holding capacity of 90% minimum.

Note: Only sterile straw mulch should be used in areas where one species of grass is desired.

G. Mulching Seeded Areas - Mulch shall be applied to all seeded areas immediately after seeding.

i. If grading is completed outside of the seeding season, mulch alone shall be applied as prescribed in this section and maintained until the seeding season returns and seeding can be performed in accordance with these specifications.

ii. When straw mulch is used, it shall be spread over all seeded areas at the rate of 2 tons/acre. Mulch shall be applied to a uniform loose depth of between 1" and 2". Mulch applied shall achieve a uniform distribution and depth so that the soil surface is not exposed. If a mulch anchoring tool is to be used, the rate should be increased to 2.5 tons/acre.

iii. Wood cellulose fiber used as a mulch shall be applied at a net dry weight of 1,500 lbs. per acre. The wood cellulose fiber shall be mixed with water, and the mixture shall contain a maximum of 50 lbs. of wood cellulose fiber per 100 gallons of water.

H. Securing Straw Mulch (Mulch Anchoring): Mulch anchoring shall be performed immediately following mulch application to minimize loss by wind or water. This may be done by one of the following methods (listed by preference), depending upon size of area and erosion hazard:

i. A mulch anchoring tool is a tractor drawn implement designed to punch and anchor mulch into the soil surface a minimum of two (2) inches. This practice is most effective on large areas, but is limited to flatter slopes where equipment can operate safely. If used on sloping land, this practice should be used on the contour if possible.

ii. Wood cellulose fiber may be used for anchoring straw. The fiber binder shall be applied at a net dry weight of 750 pounds/acre. The wood cellulose fiber shall be mixed with water and the mixture shall contain a maximum of 50 pounds of wood cellulose fiber per 100 gallons of water.

iii. Application of liquid binders should be heavier at the edges where wind catches mulch, such as in valleys and on crests of banks. The remainder of area should be appear uniform after binder application. Synthetic binders - such as Acrylic DLR (Agro-Tack), DCA-70, Petroset, Terra Tax II, Terra Tack AR or other approved equal may be used at rates recommended by the manufacturer to anchor mulch.

iv. Lightweight plastic netting may be stapled over the mulch according to manufacturer's recommendations. Netting is usually available in rolls 4' to 15' feet wide and 300 to 3,000 feet long.

I. Incremental Stabilization - Cut Slopes

i. All cut slopes shall be dressed, prepared, seeded and mulched as the work progresses. Slopes shall be excavated and stabilized in equal increments not to exceed 15'.

ii. Construction sequence (Refer to Figure 3 below):

a. Excavate and stabilize all temporary swales, side ditches, or berms that will be used to convey runoff from the excavation.

b. Perform phase 1 excavation, dress, and stabilize.

c. Perform phase 2 excavation, dress, and stabilize. Overseed phase 1 areas as necessary.

d. Perform final phase excavation, dress, and stabilize. Overseed previously seeded areas as necessary.

Note: Once excavation has begun the operation should be continuous from grubbing through the completion of grading and placement of topsoil (if required) and permanent seed and mulch. Any interruptions in the operation or completing the operation out of the seeding season will necessitate the application of temporary stabilization.

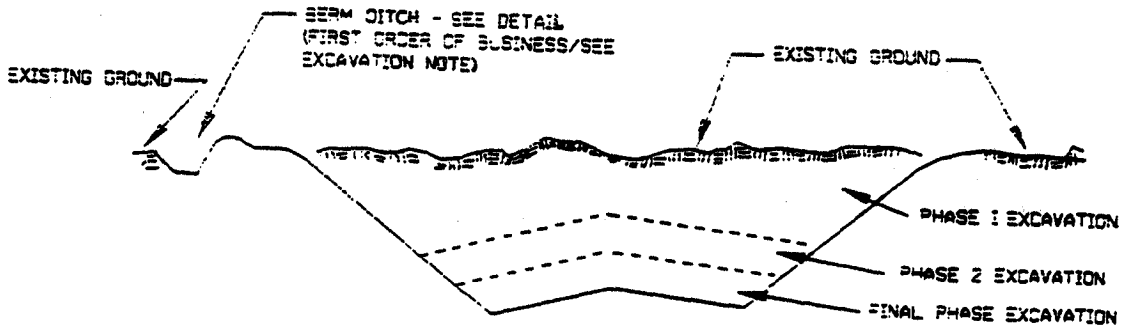

Figure 4 Incremental Stabilization - Cut

J. Incremental Stabilization of Embankments - Fill Slopes

i. Embankments shall be constructed in lifts as prescribed on the plans.

ii. Slopes shall be stabilized immediately when the vertical height of the multiple lifts reaches 15', or when the grading operation ceases as prescribed in the plans.

iii. At the end of each day, temporary berms and pipe slope drains should be constructed along the top edge of the embankment to intercept surface runoff and convey it down the slope in a non-erosive manner to a sediment trapping device.

iv. Construction sequence: Refer to Figure 4 (below).

a. Excavate and stabilize all temporary swales, side ditches, or berms that will be used to divert runoff around the fill. Construct Slope Silt Fence on low side of fill as shown in Figure 5, unless other methods shown on the plans address this area.

b. Place phase 1 embankment, dress and stabilize.

c. Place phase 2 embankment, dress and stabilize.

d. Place final phase embankment, dress and stabilize. Overseed previously seeded areas as necessary.

Note: Once the placement of fill has begun the operation should be continuous from grubbing through the completion of grading and placement of topsoil (if required) and permanent seed and mulch. Any interruptions in the operation or completing the operation out of the seeding season will necessitate the application of temporary stabilization.

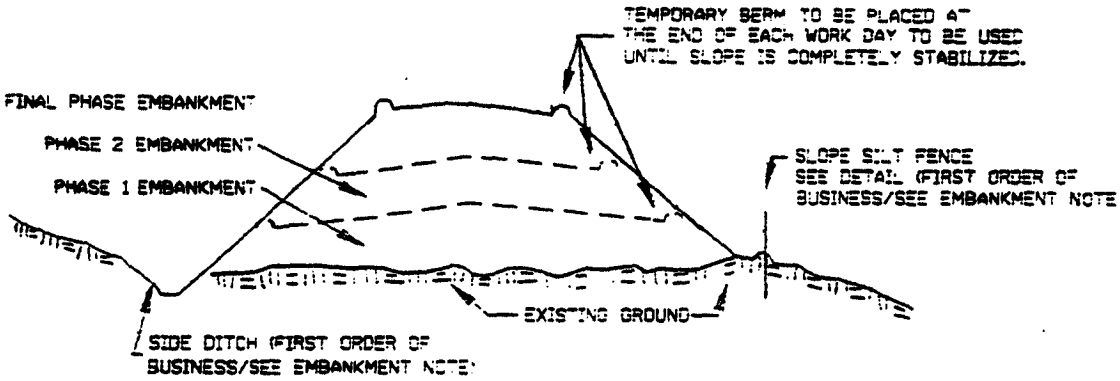

Figure 5 Incremental Stabilization - Fill

Section II - Temporary Seeding

Vegetation - annual grass or grain used to provide cover on disturbed areas for up to 12 months. For longer duration of vegetative cover, Permanent Seeding is required.

A. Seed Mixtures - Temporary Seeding

i. Select one or more of the species or mixtures listed in Table 26 for the appropriate Plant Hardiness Zone (from Figure 5) and enter them in the Temporary Seeding Summary below, along with application rates, seeding dates and seeding depths. If this Summary is not put on the plans and completed, then Table 26 must be put on the plans.

ii. For sites having soil tests performed, the rates shown on this table shall be deleted and the rates recommended by the testing agency shall be written in. Soil tests are not required for Temporary Seeding.

Temporary Seeding Summary

Seed Mixture (Hardiness Zone _____) From Table 26					Fertilizer Rate (10-10-10)	Lime Rate
No.	Species	Application Rate (lb/ac)	Seeding Dates	Seeding Depths		
					600 lb/ac (15 lb/1000 sf)	2 tons/ac (100 lb/1000 sf)

Section III: Permanent Seeding

Seeding grass and legumes to establish ground cover for a minimum period of one year on disturbed areas generally receiving low maintenance.

A. Seed Mixtures - Permanent Seeding

i. Select one or more of the species or mixtures listed in Table 25 for the appropriate Plant Hardiness Zone (from Figure 5) and enter them in the Permanent Seeding Summary below, along with application rates and seeding dates. Seeding depths can be estimated using Table 26. If this Summary is not put on the construction plans and completed, then Table 25 must be put on the plans. Additional planting specifications for exceptional sites such as shorelines, streambanks, or dunes or for special purposes such as wildlife or aesthetic treatment may be found in USDA-SCS Technical Field Office Guide, Section 342 - Critical Area Planting. For special lawn maintenance areas, see Sections IV Sod and V Turfgrass.

ii. For sites having disturbed area over 5 acres, the rates shown on this table shall be deleted and the rates recommended by the soil testing agency shall be written in.

iii. For areas receiving low maintenance, apply ureaform fertilizer (46-0-0) at 3 1/2 lbs/1000 sq.ft. (150 lbs/ac), in addition to the above soil amendments shown in the table below, to be performed at the time of seeding.

Permanent Seeding Summary

Seed Mixture (For Hardiness Zone _____) (From Table 25)					Fertilizer Rate (10-20-20)			Lime Rate
No.	Species	Application Rate (lb/ac)	Seeding Dates	Seeding Depths	N	P205	K20	
					90 lb/ac (2.0 lb/ 1000 sf)	175 lb/ac (4 lb/ 1000 sf)	175 lb/ac (4 lb/ 1000 sf)	2 tons/ac (100 lb/ 1000 sf)

Section IV - Sod: To provide quick cover on disturbed areas (2:1 grade or flatter).

A. General specifications

i. Class of turfgrass sod shall be Maryland or Virginia State Certified or Approved. Sod labels shall be made available to the job foreman and inspector.

ii. Sod shall be machine cut at a uniform soil thickness of 3/4", plus or minus 1/4", at the time of cutting. Measurement for thickness shall exclude top growth and thatch. Individual pieces of sod shall be cut to the suppliers width and length. Maximum allowable deviation from standard widths and lengths shall be 5 percent. Broken pads and torn or uneven ends will not be acceptable.

iii. Standard size sections of sod shall be strong enough to support their own weight and retain their size and shape when suspended vertically with a firm grasp on the upper 10 percent of the section.

iv. Sod shall not be harvested or transplanted when moisture content (excessively dry or wet) may adversely affect its survival.

v. Sod shall be harvested, delivered, and installed within a period of 36 hours. Sod not transplanted within this period shall be approved by an agronomist or soil scientist prior to its installation.

B. Sod Installation

i. During periods of excessively high temperature or in areas having dry subsoil, the subsoil shall be lightly irrigated immediately prior to laying the sod.

ii. The first row of sod shall be laid in a straight line with subsequent rows placed parallel to and tightly wedged against each other. Lateral joints shall be staggered to promote more uniform growth and strength. Ensure that sod is not stretched or overlapped and that all joints are butted tight in order to prevent voids which would cause air drying of the roots.

iii. Wherever possible, sod shall be laid with the long edges parallel to the contour and with staggering joints. Sod shall be rolled and tamped, pegged or otherwise secured to prevent slippage on slopes and to ensure solid contact between sod roots and the underlying soil surface.

iv. Sod shall be watered immediately following rolling or tamping until the underside of the new sod pad and soil surface below the sod are thoroughly wet. The operations of laying, tamping and irrigating for any piece of sod shall be completed within eight hours.

C. Sod Maintenance

i. In the absence of adequate rainfall, watering shall be performed daily or as often as necessary during the first week and in sufficient quantities to maintain moist soil to a depth of 4". Watering should be done during the heat of the day to prevent wilting.

ii. After the first week, sod watering is required as necessary to maintain adequate moisture content.

iii. The first mowing of sod should not be attempted until the sod is firmly rooted. No more than 1/3 of the grass leaf shall be removed by the initial cutting or subsequent cuttings. Grass height shall be maintained between 2" and 3" unless otherwise specified.

Section IV - Turfgrass Establishment

Areas where turfgrass may be desired include lawns, parks, playgrounds, and commercial sites which will receive a medium to high level of maintenance. Areas to receive seed shall be tilled by disking or other approved methods to a depth of 2 to 4 inches, leveled and raked to prepare a proper seedbed. Stones and debris over 1 1/2 inches in diameter shall be removed. The resulting seedbed shall be in such condition that future mowing of grasses will pose no difficulty.

Note: Choose certified material. Certified material is the best guarantee of cultivar purity. The certification program of the Maryland Department of Agriculture, Turf and Seed Section, provides a reliable means of consumer protection and assures a pure genetic line.

A. Turfgrass Mixtures

i. Kentucky Bluegrass - Full sun mixture - For use in areas that receive intensive management. Irrigation required in the areas of central Maryland and eastern shore. Recommended Certified Kentucky Bluegrass Cultivars Seeding Rate: 1.5 to 2.0 pounds/1000 square feet. A minimum of three bluegrass cultivars should be chosen ranging from a minimum of 10% to a maximum of 35% of the mixture by weight.

ii. Kentucky Bluegrass/Perennial Rye - Full sun mixture - For use in full sun areas where rapid establishment is necessary and when turf will receive medium to intensive management. Certified Perennial Ryegrass Cultivars/Certified Kentucky Bluegrass Seeding rate: 2 pounds mixture/1000 square feet. A minimum of 3 Kentucky Bluegrass Cultivars must be chosen, with each cultivar ranging from 10% to 35% of the mixture by weight.

iii. Tall Fescue/Kentucky Bluegrass - Full sun mixture - For use in drought prone areas and/or for areas receiving low to medium management in full sun to medium shade. Recommended mixture includes; certified Tall Fescue Cultivars 95 - 100% , certified Kentucky Bluegrass Cultivars 0 - 5%. Seeding rate: 5 to 8 lb/1000 sf. One or more cultivars may be blended.

iv. Kentucky Bluegrass/Fine Fescue - Shade Mixture - For use in areas with shade in Bluegrass lawns. For establishment in high quality, intensively managed turf area. Mixture includes; certified Kentucky Bluegrass Cultivars 30-40% and certified Fine Fescue and 60-70%. Seeding rate: 1 1/2 - 3 lbs/1000 square feet. A minimum of 3 Kentucky bluegrass cultivars must be chosen, with each cultivar ranging from a minimum of 10% to a maximum of 35% of the mixture by weight.

Note: Turfgrass varieties should be selected from those listed in the most current University of Maryland Publication, Agronomy Mimeo #77, "Turfgrass Cultivar Recommendations for Maryland".

B. Ideal times of seeding

Western MD: March 15 - June 1, August 1 - October 1 (Hardiness Zones - 5b, 6a)

Central MD: March 1 - May 15, August 15 - October 15 (Hardiness Zone - 6b)

Southern MD, Eastern Shore: March 1 - May 15, August 15 - October 15 (Hardiness Zones - 7a, 7b)

C. Irrigation

If soil moisture is deficient, supply new seedings with adequate water for plant growth (1/2" - 1" every 3 to 4 days depending on soil texture) until they are firmly established. This is especially true when seedings are made late in the planting season, in abnormally dry or hot seasons, or on adverse sites.

D. Repairs and Maintenance

Inspect all seeded areas for failures and make necessary repairs, replacements, and reseedings within the planting season.

i. **Once the vegetation is established, the site shall have 95% groundcover to be considered adequately stabilized.**

ii. If the stand provides less than 40% ground coverage, reestablish following original lime, fertilizer, seedbed preparation and seeding recommendations.

iii. If the stand provides between 40% and 94% ground coverage, overseeding and fertilizing using half of the rates originally applied may be necessary.

iv. Maintenance fertilizer rates for permanent seedings are shown in Table 24. For lawns and other medium to high maintenance turfgrass areas, refer to the University of Maryland publication "Lawn Care in Maryland" Bulletin No. 171.

Table 21 Recommended Varieties of Grasses and Legumes for Disturbed Areas

Areas Receiving Low Maintenance[1]/

Grasses	Varieties
Tall Fescue	Adventure, Apache, Arid, Bonanza, Falcon, Clemfine, Finelawn I, Hounddog, Jaguar, Kentucky 31[2]/, Mustang, Olympic, Rebel II, Tribute
Perennial Ryegrass	All-Star, Blazer, Manhattan, Palmer, Pennant, Pennfine, Premier, Prelude, Regal, Repell
Kentucky Bluegrass	"Common", Kenblue, Victa, Ram I, Monopoly
Creeping Red Fescue	Pennlawn, Flyer
Hard Fescue	Aurora, Biljart, Reliant, Scaldis, Spartan, Waldina
Chewings Fescue	Longfellow, Victory, Jamestown
Canada Bluegrass	Reubens
Redtop	Streaker
Poa Trivialis	Laser, Sabre
Reed Canarygrass	Ioreed, Palaton, Rise
Weeping Lovegrass	Morpa, "Common"
Legumes	Variety
Crownvetch	Penngift, Chemung
Serecia Lespedeza	Interstate, Interstate 76, Appalow
Flatpea	Lathco
Birdsfoot Trefoil	Empire, Norcen, Viking

1/ Refer to latest Agronomy Memo #77, University of Maryland - Cooperative Extension Service, for the Turfgrass Cultivars recommended for Maryland. This publication is updated annually.
2/ Kentucky 31 Tall Fescue shall not be used to stabilize wetlands or wetland buffer areas. Contact Maryland Department of Natural Resources, Nontidal Wetlands Division for more information.

Table 22 Quality of Seed

LEGUMES	Minimum Seed Purity (%)	Minimum Germination(%)
Birdsfoot Trefoil	97	85
Crownvetch	98.5	80
Lespedeza, Sericea	98	85
Flatpea	98	80
GRASSES		
Bluegrass, Canada	90	80
Bluegrass, Kentucky	90	80
Fescue, red	98.5	85
Fescue, Chewings	98	85
Fescue, tall	98	90
Lovegrass, weeping	98	80
Redtop	92	80
Reed canarygrass	96	80
Ryegrass, Annual	95	85
Ryegrass, Perennial	98	90
OTHER ANNUALS		
Barley	98	90
Millet	99	80
Oats	99	90
Rye	98.5	85

NOTE: Seed containing prohibited or restricted noxious weeds is unacceptable.

Prohibited Noxious Weeds - Johnsongrass or Johnsongrass crosses, Canada thistle, and quackgrass.

Restricted Noxious Weeds - Wild garlic and wild onion, bermudagrass, annual bluegrass, corn cockle, dodder and bindweed.

Seed should contain less than 2.5% of weed seeds, however, 0% is desirable.

To calculate percent pure live seed, multiply germination times purity and divide by 100.

Example: Tall fescue with a germination of 85 percent and a purity of 97 percent. 97 x 85 = 8245. 8245/100 = 82.45 percent pure live seed.

Table 23 Grass and Legume Plant Characteristics

Common Name		Redtop	Rye	Ryegrass Italian	Sweetclover	Sudangrass	Crownvetch	Lespedeza Korean	Lespedeza Sericea	Ryegrass Perennial	Birdsfoot Trefoil
Botanical Name		Argostis Alba	Secale Cereale	Lolium Multiflorum	Lolium Perenne	Melilotus Alba Officinalis	Sorghum Sudanense	Coronilla Varia	Lespedeza Etipulacea	Lolium Perenne	Lotus Corniculatis
Germination Time [29]/ (Days)		5 - 10	4 - 7	5 - 14	10	4 - 10	14 - 21	5 - 14	7 - 28	5 - 14	10
Growth Habitat [30]/		P, SL, B	A	A	B, I	A	P, L, R	A	P, L, B	P, S, B	P, L
Seasons	Cool	X	X	X	X		X			X	X
	Warm				X	X	X	X	X		X
Drainage Class	Dry, Not Droughty	X	X		X	X	X	X	X		X
	Well Drained	X	X	X	X	X	X	X	X	X	X
	Moderately Well Drained	X	X	X	X	X	X	X	X	X	X
	Somewhat Poorly Drained	X		X		X		X	X	X	X
	Poorly Drained	X									
Annual Cover	Winter		X	X	X					X	X
	Summer				X	X		X			
pH Range		4.0 - 7.5	5.5 - 7.5	5.5 - 7.5	6.5 - 7.5	4.5 - 7.5	5.5 - 7.5	5.5 - 7.5	5.5 - 7.5	5.5 - 7.5	5.0 - 7.5
Flooding Tolerance		X		X						X	X
Erodable Areas		X	X	X	X	X	X	X	X	X	X
Waterways and Channels		X									
Shade Tolerance				X			X			X	
Foot Traffic		X									
Playgrounds, Athletic Fields, Lawns		X									
Beautify							X				X
Levels of Maintenance	High				X						
	Medium	X	X	X	X		X		X	X	X
	Low					X	X	X	X	X	X

[29] Number of days required for majority of seeds to germinate and emerge under favorable conditions

[30] Growth Habitat: A-Annual, B-Bunch, Bi-Biannual, L-Long Lived, R-Rizomatous or spreads by root stocks, SL-Short Lived, S-Stoliniferous

Table 24 Maintenance Fertilization for Permanent Seedings

Use Soil Test Results or Rates Shown Below

Seeding Mixture	Type	lb/ac	lb/1000 sf	Time	Mowing
Tall fescue makes up 70% or more of cover	10-10-10 or 30-10-10	500 400	11.5 9.2	Yearly or as needed. Fall	Not closer than 3" if occasional mowing is desired
Crownvetch Sericea Lespedeza Birdsfoot Trefoil	0-20-0	400	9.2	Spring, the year following establishment and every 4-5 years thereafter	Do not mow crownvetch
Fairly uniform stand of tall fescue and sericea lespedeza, or birdsfoot trefoil	5-10-10	500	11.5	Fall the year following establishment and every 4-5 years thereafter	Not required, no closer than 4" in the fall after seed has matured.
Weeping lovegrass & sericea lespedeza fairly uniform plant distribution.	5-10-10	500	11.5	Spring, the year following establishment and every 3-4 years thereafter.	Not required, not closer than 4" in fall after seed has matured.
Red & chewings fescue, Kentucky bluegrass, hard fescue mixtures	20-10-10	250 100	5.8 2.3	September, 30 days later. December, May 20, June 30, if needed.	Mow no closer than 2" for red fescue and K. bluegrass, 3" for fescue.

FIGURE 5

JANUARY 1990

MARYLAND

USDA PLANT HARDINESS ZONES

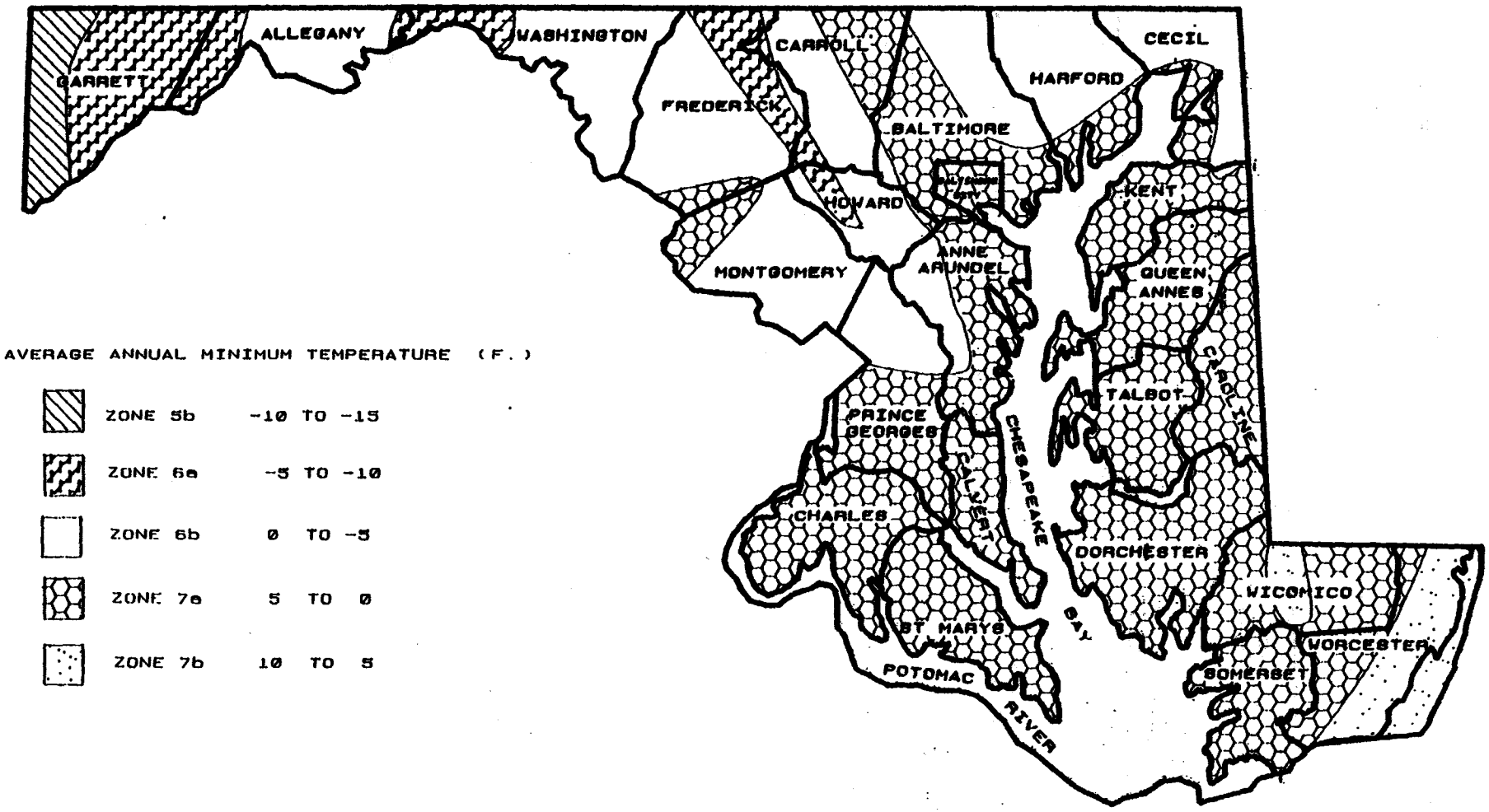

Table 25 Permanent Seeding for Low Maintenance Areas

MIX	SEED MIX (USE CERTIFIED[31] MATERIAL IF AVAILABLE)	PLANTING		SITE CONDITIONS	USDA HARDI-NESS ZONES[32]	RECOMMENDED PLANTING DATES[33]							
		LBS/AC	LBS/1000 SQ FT			3/1-5/15	3/15-6/1	5/16-8/14	6/2-7/31	8/1-10/1	8/15-10/15	8/15-11/15	
1	TALL FESCUE (75%), CANADA BLUEGRASS (10%), KENTUCKY BLUEGRASS (10%), REDTOP (5%)[34]	150	3.4	MOIST TO DRY	5b		X			X			A
					6a		X			X			
					6b	X					X		
					7a	X						X	
					7b	X						X	
2	KENTUCKY BLUEGRASS (50%), CREEPING RED FESCUE OR A HARD FESCUE (40%), REDTOP (10%)	150	3.4	MOIST TO MODERATELY DRY TO DRY	5b		X			X			B
					6a		X			X			
					6b	X					X		
3	TALL FESCUE (85%), PERENNIAL RYEGRASS (10%), KENTUCKY BLUEGRASS (5%)	125 15 10	2.9 .34 .23	MOIST TO DRY	5B		X			X			C
					6A		X			X			
					6B	X					X		
					7A	X						X	
					7B	X						X	
4	RED FESCUE OR CHEWINGS FESCUE (80%) PERENNIAL RYEGRASS (20%)	60 60 15	.92 .92 .34	MOIST TO DRY	5b		X			X			D
					6a		X			X			
					6b	X					X		
5	TALL FESCUE (85%) OR, PERENNIAL RYEGRASS (50%) PLUS CROWNVETCH OR FLATPEA	110 20 20 20	2.5 .46 .46 .46	MOIST TO DRY	5b		X			X			E
					6a		X			X			
					6b	X					X		
					7a	X						X	
					7b	X						X	
6	WEEPING LOVEGRASS (17%) SERECIA LESPEDEZA (83%)	4 20	.09 .46	DRY TO VERY DRY	6a	X		X					F
					7a	X		X					
					7b	X		X					

NOTES:
A/ USED BY SHA ON SLOPED AREAS. ADD A LEGUME FOR SLOPES > THAN 3:1.
B/ USED IN MEDIAN AREAS BY SHA. SHADE TOLERANT.
C/ POPULAR MIX - PRODUCES PERMANENT GROUNDCOVER QUICKLY. BLUEGRASS THICKENS STAND.
D/ BEST USE ON SHADY SLOPES NOT ON POORLY DRAINED CLAYS.
E/ USE ON LOW MAINTENANCE, STEEP SLOPES. USE TALL FESCUE IN DRAUGHTY COND. CROWN VETCH BEST FOR 5b, 6a, 6b
F/ SUITABLE FOR SEEDING IN MID-SUMMER.

[31] See Table 20 for a list of recommended varieties best suited for Maryland.

[32] Refer to Figure 5.

[33] Recommended planting dates are indicated by an X. For seeding during time periods not recommended use a nurse crop such as weeping love grass or millet (mid-summer), or cereal r[illegible] fall to early spring) refer to Table 26 Temporary Seeding

[34] Maryland State Highway Administration Approved Mixes.

Table 25 Permanent Seeding for Low Maintenance Areas (Cont'd)

MIX	SEED MIX (USE CERTIFIED MATERIAL IF AVAILABLE)	PLANTING RATE		SITE CONDITIONS	USDA HARDI-NESS ZONES	RECOMMENDED PLANTING DATES							NOTES
		LBS/AC	LBS/1000 SQ FT			3/1-5/15	3/15-6/1	5/16-8/14	6/2-7/31	8/1-10/1	8/15-10/15	8/15-11/15	
7	TALL FESCUE (83%) WEEPING LOVEGRASS (2%) PLUS SERECIA LESPEDEZA (15%)	110 3 20	2.5 .07 .46	DRY TO VERY DRY	5b		X		X	X			G
					6a		X		X	x			
					6b	X		X			X		
					7a	X		X				X	
					7b	X		X				X	
8	REED CANARYGRASS (75%) REDTOP (6%) PLUS BIRDSFOOT TREEFOIL* (19%)	40 3 10	.92 .07 .23	WET TO MODERATELY DRY	5b		X			X			H
					6a		X			X			
					6b	X					X		
					7a	X						X	
					7b	X						x	
9	TALL FESCUE (86%) POA TRIVIALIS (7%) BIRDSFOOT TREEFOIL (7%)	125 10 10	2.9 .23 .23	WET TO MODERATELY DRY	5b		X			X			I
					6a		X			X			
					6b	X					X		
0	TALL FESCUE (80%) HARD FESCUE (20%)	120 30	3.4 .69	WET TO DRY	5b		X			X			J
					6a		X			X			
					6b	X					X		
					7a	X						X	
					7b	X						X	
11	HARD FESCUE (100%)	. . 75	1.7	MOIST TO DRY	5b		X			X			K
					6a		X			X			
					6b	X					X		
					7a	X						X	

NOTES: G/ WEEPING LOVEGRASS MAY BE SEEDED WITH TALL FESCUE IN MID-SUMMER. SERECIA LESPEDEZA IS BEST SUITED FOR ZONES 7a AND 7b.
H/ USE ON POORLY DRAINED SOILS - DITCHES OR WATERWAYS. BIRDSFOOT TREEFOILIS BEST FOR ZONES 5b, 6a, ABOVE 2,000 FT.
I/ USE IN AREAS OF MOIST SHADE. POA TRIVIALIS THRIVES IN WET SHADY AREAS.
J/ TALL FESCUE MAY BE SEEDED ALONE. THE HARD FESCUE PROVIDES BETTER SHADE TOLERANCE AND PRODUCES A BETTER STAND.
K/ LOW FERTILITY GRASS. REQUIRES INFREQUENT MOWING, GOOD COMPANION FOR WILDFLOWERS.

* LEGUMINOUS SEEDS SHALL BE INOCULATED OR TREATED WITH UNEXPIRED APPROVED CULTURE FOR THE SPECIFIC LEGUME, IN THE PROPER PROPORTIONS, AS SPECIFIED ON THE PACKAGE LABEL. THE INOCULANT SHALL BE STORED AT ROOM TEMPERATURE, OUT OF DIRECT SUNLIGHT AND AWAY FROM HEATING UNITS. WHEN SEEDING DRY WITH MECHANICAL SEEDERS THOROUGHLY MIX THE POWDER FORM OF THE INOCULANT WITH THE SEED BY WETTING THE SEED WITH A SMALL AMOUNT OF WATER AND THEN ADDING THE POWDER. THE INOCULATED SEED IS THEN MIXED WITH OTHER SEEDS AND PLANTED WITHIN 48 HOURS. SEEDS INOCULATED WITH LIQUID CULTURES SHALL BE ANTED WITHIN 24 HOURS. INOCULATED SEED NOT PLANTED WITHIN THE SPECIFIED TIME WILL BE REINOCULATED. WHEN USING HYDRAULIC SEEDERS, USE 10 TIMES THE OUNT OF INOCULANT SPECIFIED FOR DRY SEEDING. INOCULATED SEED SHALL NOT BE EXPOSED TO SUNLIGHT OR LEFT IN A SLURRY FOR MORE THAN ONE HOUR, 'RWISE REINOCULATION WILL BE NECESSARY.

Table 26 Temporary Seeding Rates, Depths, and Dates

SPECIES	MINIMUM SEEDING RATES		PLANTING DEPTH[36]	HARDINESS ZONES[37] AND SEEDING DATES [38]								
				7a and 7b			6b			6a and 5b		
	PER ACRE	LBS/1000 SQ.FT.	INCHES	2/1-4/30	5/1-8/14	8/15-11/30	3/1-4/30	5/1-8/14	8/15-11/15	3/15-5/31	6/1-7/31	8/1-10/31
CHOOSE ONE:												
BARLEY	2.5 BU. (122 lbs)	2.80	1-2	X	-	BY 10/15	X	-	BY 10/15	X	-	BY 10/1
OATS	3 BU. (96 lbs)	2.21	1-2	X	-	-	X	-	-	X	-	-
RYE [39]	2.5 BU. (140 lbs)	3.22	1-2	X	-	X	X	-	X	X	-	X
BARLEY OR RYE PLUS FOXTAIL MILLET[40]	150 lbs	3.45	1	X X	X X	10/15 X	X X	X X	10/15 X	X X	X X	10/1 X
WEEPING LOVEGRASS[41]	4 lbs	.09	1/4 - 1/2	-	X	-	-	X	-	-	X	-
ANNUAL RYEGRASS	50 lbs	1.15	1/4 - 1/2	X	-	11/1	X	-	11/1	X	-	8/15
MILLET[42]	50 lbs	1.15	1/2	-	X	-	-	X	-	-	X	-

36 Applicable on slopes of 3:1 or flatter

37 Refer to Figure A - Adopted from USDA, ARS Miscellaneous Publication #1475, January 1990

38 Between fall and spring seeding dates, use mulch only if ground is frozen and reseed when thawed

39 May be used as a nurse crop for late fall/early winter permanent seedings, add 56 lbs/ac to the permanent seeding mixture

40 Maryland State Highway Administration Temporary Seed Mix

41 May be used as a nurse crop for mid-summer permanent seedings. Add 2 lbs/ac to permanent seed mix.

42 May be used as a nurse crop for mid-summer permanent seedings. Add 10 lbs/ac to the permanent seeding mix.

Bibliography

1. United States Department of Agriculture, Soil Conservation Service (SCS). USDA-SCS Field Office Technical Guide (Section 342) Critical Area Planting, Soil Conservation Service.

2. Maryland Department of Transportation, State Highway Administration. Standard Specifications for Construction and Materials. State Highway Administration, January, 1982.

3. Maryland Seeding Association, Guidelines and Specifications for Soil Preparation/Seeding and Sodding. Maryland Seeding Association, 1988.

4. The Pennsylvania State University, Extension Service. Agronomy Guide, 1990. The Pennsylvania State University, Extension Service, University Park, Pennsylvania. 1990

5. University of Maryland, Agronomy Department. Turfgrass Cultivars, Recommendations for Maryland, Agronomy Memo No. 77, University of Maryland, Agronomy Department, May 1990.

6. University of Maryland, Cooperative Extension Service. Lawn Care in Maryland, Bulletin 171: Cooperative Extension Service, University of Maryland. 1982.

21.0 STANDARD AND SPECIFICATIONS

FOR

TOPSOIL

Definition

Placement of topsoil over a prepared subsoil prior to establishment of permanent vegetation.

Purpose

To provide a suitable soil medium for vegetative growth. Soils of concern have low moisture content, low nutrient levels, low pH, materials toxic to plants, and/or unacceptable soil gradation.

Conditions Where Practice Applies

I. This practice is limited to areas having 2:1 or flatter slopes where:

a. The texture of the exposed subsoil/parent material is not adequate to produce vegetative growth.

b. The soil material is so shallow that the rooting zone is not deep enough to support plants or furnish continuing supplies of moisture and plant nutrients.

c. The original soil to be vegetated contains material toxic to plant growth.

d. The soil is so acidic that treatment with limestone is not feasible.

II. For the purpose of these Standards and Specifications, areas having slopes steeper than 2:1 require special consideration and design for adequate stabilization. Areas having slopes steeper than 2:1 shall have the appropriate stabilization shown on the plans.

Construction and Material Specifications

I. Topsoil salvaged from the existing site may be used provided that it meets the standards as set forth in these specifications. Typically, the depth of topsoil to be salvaged for a given soil type can be found in the representative soil profile section in the Soil Survey published by USDA-SCS in cooperation with Maryland Agricultural Experimental Station.

II. Topsoil Specifications - Soil to be used as topsoil must meet the following:

i. Topsoil shall be a loam, sandy loam, clay loam, silt loam, sandy clay loam, loamy sand. Other soils may be used if recommended by an agronomist or soil scientist and approved by the appropriate approval authority. Regardless, topsoil shall not be a mixture of contrasting textured subsoils and shall contain less than 5% by volume of cinders, stones, slag, coarse fragments, gravel, sticks, roots, trash, or other materials larger than 1½" in diameter.

ii. Topsoil must be free of plants or plant parts such as bermuda grass, quackgrass, Johnsongrass, nutsedge, poison ivy, thistle, or others as specified.

iii. Where the subsoil is either highly acidic or composed of heavy clays, ground limestone shall be spread at the rate of 4-8 tons/acre (200-400 pounds per 1,000 square feet) prior to the placement of topsoil. Lime shall be distributed uniformly over designated areas and worked into the soil in conjunction with tillage operations as described in the following procedures.

II. For sites having disturbed areas under 5 acres:

i. Place topsoil (if required) and apply soil amendments as specified in 20.0 Vegetative Stabilization - Section I - Vegetative Stabilization Methods and Materials.

III. For sites having disturbed areas over 5 acres:

i. On soil meeting Topsoil specifications, obtain test results dictating fertilizer and lime amendments required to bring the soil into compliance with the following:

a. pH for topsoil shall be between 6.0 and 7.5. If the tested soil demonstrates a pH of less than 6.0, sufficient lime shall be perscribed to raise the pH to 6.5 or higher.

b. Organic content of topsoil shall be not less than 1.5 percent by weight.

c. Topsoil having soluble salt content greater than 500 parts per million shall not be used.

d. No sod or seed shall be placed on soil which has been treated with soil sterilants or chemicals used for weed control until sufficient time has elapsed (14 days min.) to permit dissipation of phyto-toxic materials.

Note: Topsoil substitutes or amendments, as recommended by a qualified agronomist or soil scientistand approved by the appopriate approval authority, may be used in lieu of natural topsoil.

ii. Place topsoil (if required) and apply soil amendments as specified in 20.0 Vegetative Stabilization - Section I - Vegetative Stabilization Methods and Materials.

V. Topsoil Application

i. When topsoiling, maintain needed erosion and sediment control practices such as diversions, Grade Stabilization Structures, Earth Dikes, Slope Silt Fence and Sediment Traps and Basins.

ii. Grades on the areas to be topsoiled, which have been previously established, shall be maintained, albeit 4" - 8" higher in elevation.

iii. Topsoil shall be uniformly distributed in a 4" - 8" layer and lightly compacted to a minimum thickness of 4". Spreading shall be performed in such a manner that sodding or seeding can proceed with a minimum of additional soil preparation and tillage. Any irregularities in the surface resulting from topsoiling or other operations shall be corrected in order to prevent the formation of depressions or water pockets.

iv. Topsoil shall not be placed while the topsoil or subsoil is in a frozen or muddy condition, when the subsoil is excessively wet or in a condition that may otherwise be detrimental to proper grading and seedbed preparation.

VI. Alternative for Permanent Seeding - Instead of applying the full amounts of lime and commercial fertilizer, composted sludge and amendments may be applied as specified below:

i. Composted Sludge Material for use as a soil conditioner for sites having disturbed areas over 5 acres shall be tested to prescribe amendments and for sites having disturbed areas under 5 acres shall conform to the following requirements:

a. Composted sludge shall be supplied by, or originate from, a person or persons that are permitted (at the time of acquisition of the compost) by the Maryland Department of the Environment under COMAR 26.04.06.

b. Composted sludge shall contain at least 1 percent nitrogen, 1.5 percent phosphorus, and 0.2 percent potassium and have a Ph of 7.0 to 8.0. If compost does not meet these requirements, the appropriate constituents must be added to meet the requirements prior to use.

c. Composted sludge shall be applied at a rate of 1 ton/1,000 square feet.

iv. Composted sludge shall be amended with a potassium fertilizer applied at the rate of 4 lb/1,000 square feet, and 1/3 the normal lime application rate.

References: Guideline Specifications, Soil Preparation and Sodding. MD-VA, Pub. #1, Cooperative Extension Service, University of Maryland and Virginia Polytechnic Institutes. Revised 1973.

22.0 STANDARD AND SPECIFICATIONS

FOR

EROSION CONTROL MATTING

Definition

Erosion control matting is used to temporarily stabilize channels or steep slopes until vegetation is established. There are many types of matting available. The erosion control matting that is used must withstand velocities of 6 feet per second.

Conditions Where Practice Applies

Mattings are used to stabilize the flow channels of dikes and swales where the velocity is under 6 feet per second. They may also be used on tidal or stream banks where moving water is likely to wash out new vegetative plantings.

Installation

Some channels will require multiple widths of matting, with two widths being the most commonly used. Unroll the matting starting at the upper end of the channel, allowing a 4" overlap of mattings along center of channel. The sequence of construction should be as follows:

1. Bury the top ends of the matting in a narrow trench, 6" in depth. Backfill the trench and tamp firmly to conform to the channel cross-section. Secure with a row of staples about 4" down slope from the trench. Spacing between staples is 6".

2. Staple the 4" overlap in the channel center spacing the staples 18" apart.

3. Make sure the matting is smooth and in firm contact with the soil, then staple the outer edges of the matting. Staples shall be placed 2' apart with 4 rows for each strip, 2 outer rows, and 2 alternating rows down the center.

4. Where one roll of matting ends and another begins, the end of the top strip shall overlap the upper end of the lower strip by 4", shiplap fashion. Reinforce the overlap with a double row of staples spaced 6" apart in a staggered pattern on either side. The discharge end of the matting liner should be similarly secured with 2 double rows of staples.

5. The protective matting can be laid over sprigged areas where small grass plants have been planted. Where ground covers are to be planted, lay the protective matting first and then plant through the matting according to the landscape design.

DETAIL 30 EROSION CONTROL MATTING

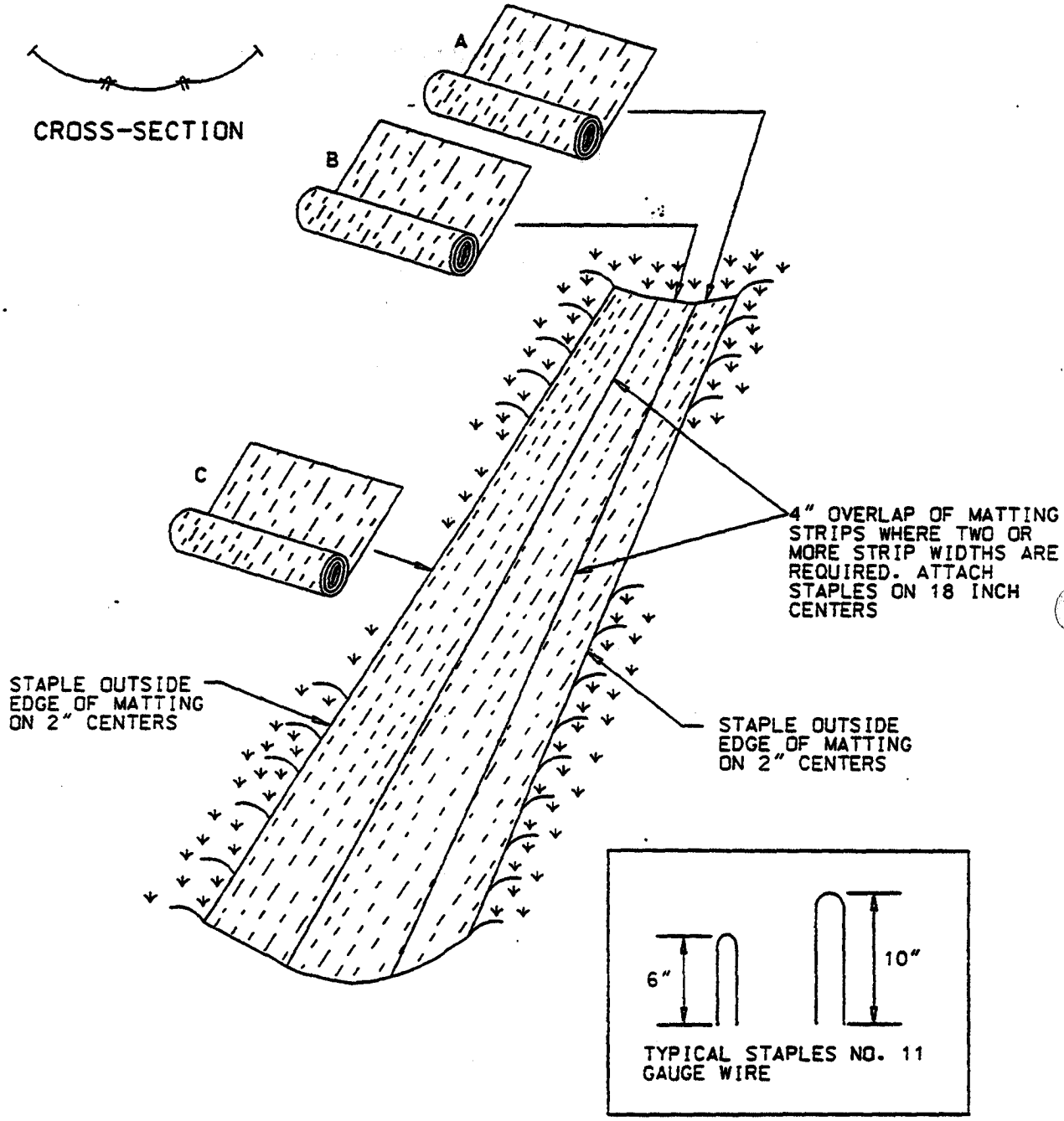

EROSION CONTROL MATTING

Construction Specifications

1. Key-in the matting by placing the top ends of the matting in a narrow trench, 6" in depth. Backfill the trench and tamp firmly to conform to the channel cross-section. Secure with a row of staples about 4" down slope from the trench. Spacing between staples is 6".

2. Staple the 4" overlap in the channel center using an 18" spacing between staples.

3. Before stapling the outer edges of the matting, make sure the matting is smooth and in firm contact with the soil.

4. Staples shall be placed 2' apart with 4 rows for each strip, 2 outer rows, and 2 alternating rows down the center.

5. Where one roll of matting ends and another begins, the end of the top strip shall overlap the upper end of the lower strip by 4", shiplap fashion. Reinforce the overlap with a double row of staples spaced 6" apart in a staggered pattern on either side.

6. The discharge end of the matting liner should be similarly secured with 2 double rows of staples.

Note: If flow will enter from the edge of the matting then the area effected by the flow must be keyed-in.

23.0 STANDARD AND SPECIFICATIONS

FOR

TREE PROTECTION

Definition

Protection of desirable trees from mechanical and other injury while the land is being developed.

Purpose

To employ the necessary protective measures to insure the survival of desirable trees for shade, beautification, and vegetative cover.

Conditions Where Practice Applies

On areas now occupied by single specimen trees or groups of trees.

Criteria for deciding upon the trees to leave:

1. Aesthetic value: Consideration should be given to autumn foliage, flowering habits, bark and crown characteristics, and type of fruit.

2. Freedom from disease and rot.

3. Life span of trees: Some are considered short-lived trees.

4. Wind firmness: Virginia pine has a very shallow root system, and trees will blow over easily if they have been growing in a closed stand.

5. Wildlife values: Oaks, hickories, and dogwoods, etc. have a high wildlife food value.

6. Comfort index: Summer temperatures are generally ten degrees cooler under stands of hardwoods than pines or cedars.

7. Sudden exposure: Some trees are sensitive to direct sunlight radiated heat from proposed buildings and pavement.

8. Space needed: Give consideration to future growth and relationship to structures, electric and telephone lines, water and sewer lines, and driveways. Mark trees with bright paint or ribbon so there is no doubt as to which trees are to be left and protected from damage during construction.

Criteria for protecting trees:

1. Trees within 25' of a building site and associated grading, parking and utility extensions shall be boxed in to prevent mechanical injury . The box should be as close to the drip line of the tree as possible.

2. Boards will not be nailed to trees during building operations.

3. Heavy equipment operators will be cautioned to avoid damage to existing tree trunks and roots during land leveling operations. Tunnel under root system when installing utility lines, if possible.

4. Tree trunks and exposed roots and limbs damaged during equipment operations will be cared for as prescribed by a forester or licensed tree expert.

5. Wood chips when spread to a 4" depth can be used in wooded sites to help prevent soil compaction and damage to trees.

6. The use of heavy equipment on root systems of desirable trees must be avoided to prevent soil compaction. All construction should be kept out of the drip line of protected trees. Protective fencing shall be utilized for trees being retained and shall be located at the drip line.

7. Broad leaf trees should receive a heavy application of complete fertilizer to aid their recovery from possible damage caused by construction operations. Fertilization should be done during winter and/or early spring following completion of construction. It should be applied at the following rate: 2 to 4 lbs. of 10-6-4 for each inch of trunk diameter measured at 4 1/2' above ground line. Fertilizer should be applied in holes 1" in diameter 18" deep. Spaced about 2' apart at the drip line of the tree.

8. During the first two summers following construction, it is desirable that the trees receive adequate amounts of water.

References

1. Agricultural Information Bulletin 285, "Protecting Trees Against Damage from Construction Work," Superintendent of Documents, U.S. Government Printing Office, Washington, D.C. 20402.

2. Guidelines for the Control of Erosion and Sediment in Urban Areas of the Northeast, USDA, Soil Conservation Service, Upper Darby, Pa., 1970.

DETAIL 31 TREE PROTECTION

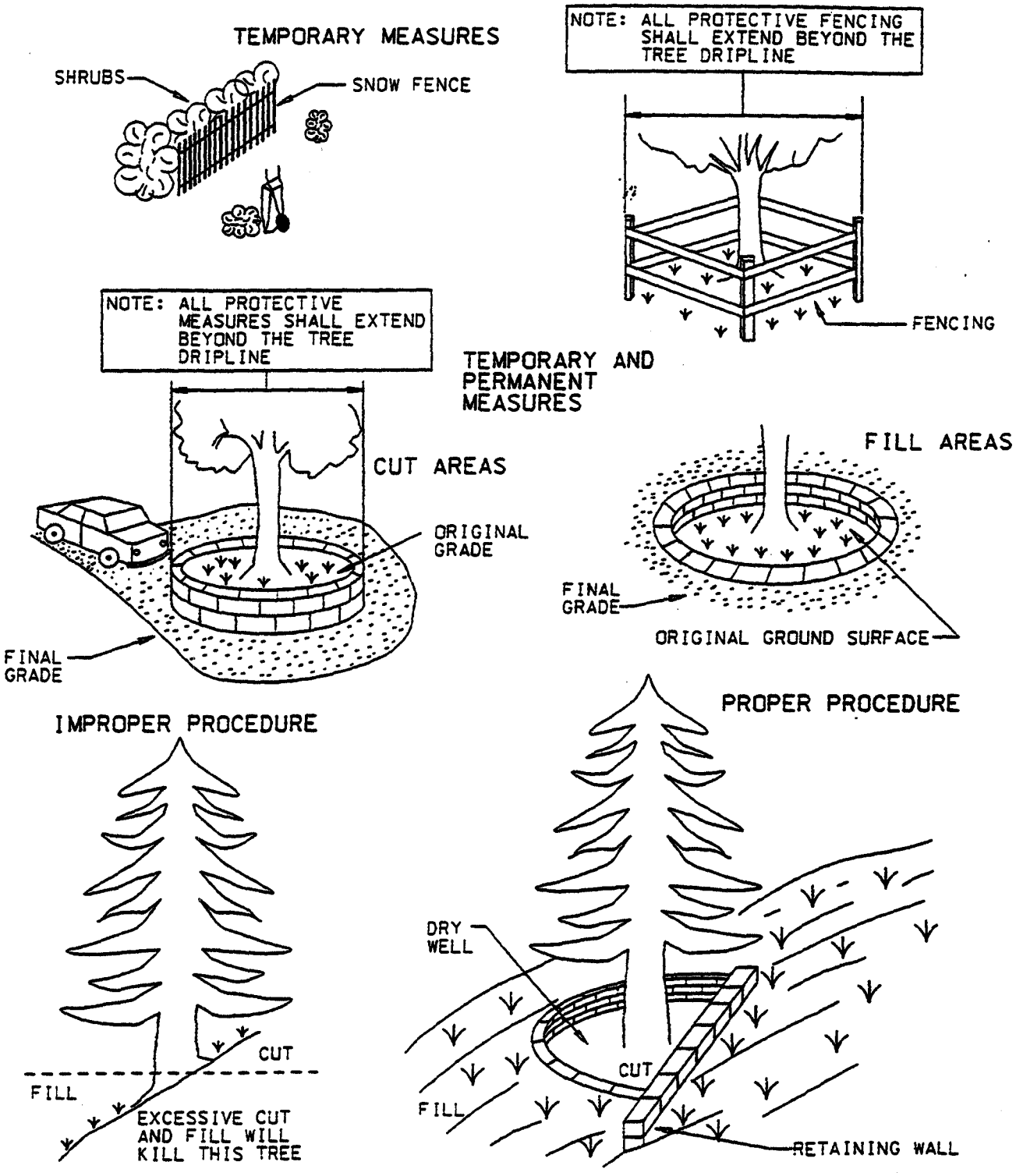

Section H - MISCELLANEOUS PRACTICES

24.0 MATERIALS SPECIFICATIONS

Table 27 Geotextile Fabrics

CLASS	APPARENT OPENING SIZE MM. MAX.	GRAB TENSILE STRENGTH LB. MIN.	BURST STRENGTH PSI. MIN.
A	0.30	250	500
B	0.60	200	320
C	0.30	200	320
D	0.60	90	145
E	0.30	90	145
F (SILT FENCE)	0.40-0.80*	90	190

* US Std Sieve CW-02215

The properties shall be determined in accordance with the following procedures:

-Apparent opening size MSMT 323

-Grab tensile strength ASTM D 1682: 4x8" specimen, 1x2" clamps, 12"/min. strain rate in both principal directions of geotextile fabric.

-Burst strength ASTM D 3786

The fabric shall be inert to commonly encountered chemicals and hydrocarbons, and will be rot and mildew resistant. It shall be manufactured from fibers consisting of long chain synthetic polymers, and composed of a minimum of 85% by weight of polyolephins, polyesters, or polyamides. The geotextile fabric shall resist deterioration from ultraviolet exposure.

In addition, Classes A through E shall have a 0.01 cm./sec. minimum permeability when tested in accordance with MSMT 507, and an apparent minimum elongation of 20 percent (20%) when tested in accordance with the grab tensile strength requirements listed above.

Silt Fence

Class F geotextile fabrics for silt fence shall have a 50 lb./in. minimum tensile strength and a 20 lb./in. minimum tensile modules when tested in accordance with MSMT 509. The material shall also have a 0.3 gal./ft.^{2}/min. flow rate and seventy-five percent (75%) minimum filtering efficiency when tested in accordance with MSMT 322.

Geotextile fabrics used in the construction of silt fence shall resist deterioration from ultraviolet exposure. The fabric shall contain sufficient amounts of ultraviolet ray inhibitors and stabilizers to provide a minimum of 12 months of expected usable construction life at a temperature range of 0 to 120 degrees F.

Table 28 Stone Size

	SIZE RANGE	D_{50}	D_{100}	AASHTO	WEIGHT
NUMBER 57*	3/8" - 1 1/2"	1/2"	1 1/2"	M-43	N/A
NUMBER 1	2" - 3"	2 1/2"	3"	M-43	N/A
RIP-RAP**	4" - 7"	5 1/2"	7"	N/A	N/A
CLASS I	N/A	9.5"	15"	N/A	150lb max
CLASS II	N/A	16"	24"	N/A	700lb max
CLASS III	N/A	23"	34"	N/A	2000lb max

* This classification is to be used on the inside face of stone outlets and check dams.

** This classification is to be used when ever small rip-rap is required. The State Highway Administration designation for this stone is Stone For Gabions (§905.01.04).

Stone For Gabion Baskets

BASKET THICKNESS		SIZE OF INDIVIDUAL STONES	
INCHES	MM	INCHES	MM
6	150	3 - 5	75 - 125
9	225	4 - 7	100 - 175
12	300	4 - 7	100 - 175
18	460	4 - 7	100 - 175
36	910	4 - 12	100 - 300

NOTE: Recycled concrete equivalent may be substituted for all stone classifications. Recycled concrete equivalent shall be concrete broken into the sizes meeting the appropriate classification, shall contain no steel reinforcement, and shall have a density of 150 pounds per cubic foot.

25.0 STRAW BALE DIKE

Definition

Straw bale dikes are temporary barriers of straw or similar material used to intercept and direct surface runoff.

Purpose

The straw bale dike filters sediment from runoff so that deposition of transported sediment can occur. The straw bale dike is used to intercept or direct sediment laden runoff to a sediment trap so that deposition of transported sediment can occur.

1. The use of straw bale dikes is not recommended as a primary sediment control device. Straw bale dikes clog and deteriorate rapidly and require frequent maintenance.

2. Straw bale dikes can be used to intercept sheet flow only. They cannot be used as velocity checks in swales, or placed where they will intercept concentrated flow.

3. Straw bale dikes can be used only on projects that will be completed within three months.

4. Straw bale dikes should not be used on slopes exceeding 5:1.

5. The length of straw bale dikes must conform to the following limitations:

Table 29 Straw Bale Design Criteria

Slope	Slope Steepness	Slope Length	Dike Length
0% to 2%	Flatter than 50:1	300 feet	500 feet
2% to 10%	50 :1 to 10 :1	125 feet	500 feet
10% to 20%	10 :1 to 5 :1	100 feet	500 feet

Construction Specifications

1. Bales shall be placed in a row on the contour with the ends of each bale tightly abutting the adjacent bales.

2. Each bale shall be entrenched 4" min. in the soil and placed so the bindings are horizontal.

3. Bales shall be securely anchored in place by either two stakes or re-bars driven through the bale 12 to 18" into the ground. The first stake in each bale shall be driven toward the previously laid bale at an angle to force the bales together. Stakes shall be driven flush with the top of the bale.

4. Straw bale dikes shall be inspected frequently and after each rain event and maintenance performed as necessary.

5. All bales shall be removed when the site has been stabilized. The trench where the bales were located shall be graded flush and stabilized.

DETAIL 32 STRAW BALE DIKE

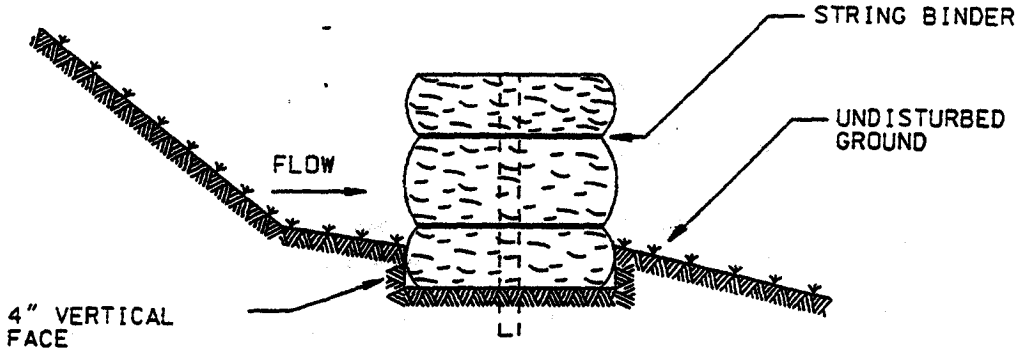

BEDDING DETAIL

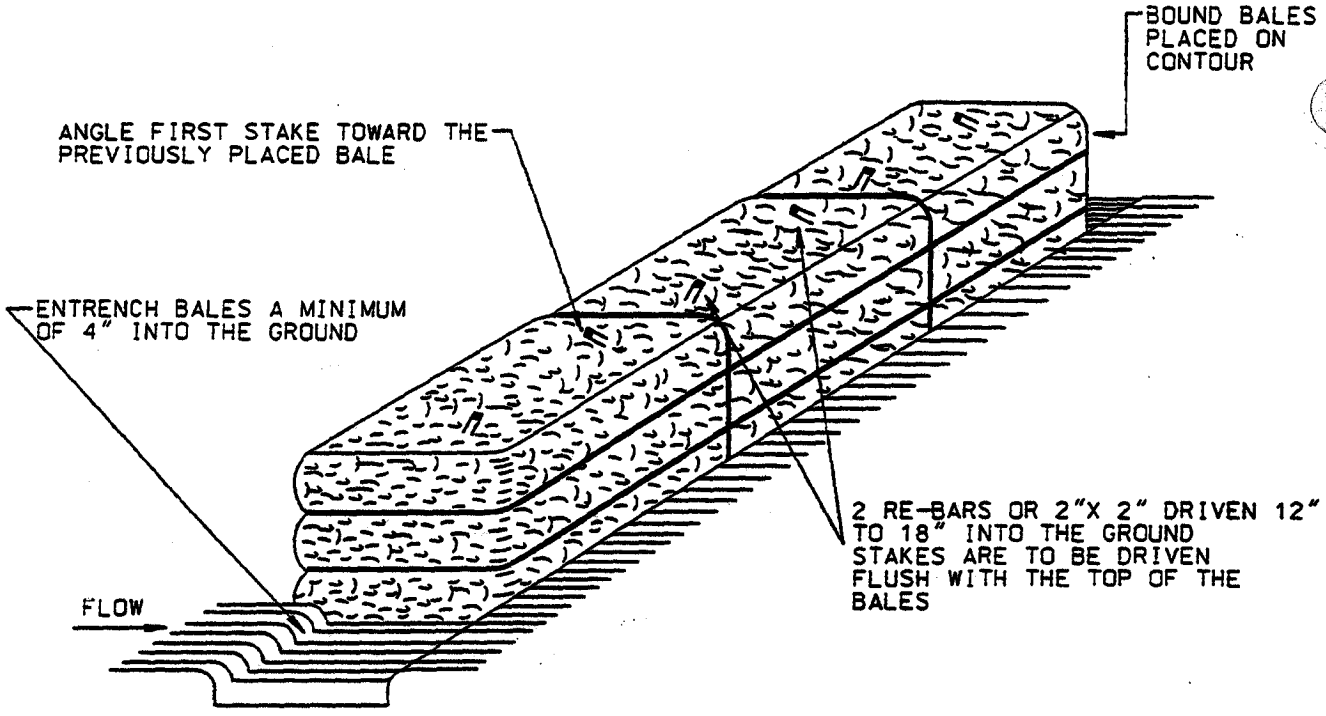

ANCHORING DETAIL

STRAW BALE DIKE

CONSTRUCTION SPECIFICATIONS

1. Bales shall be placed at the toe of a slope, on the contour, and in a row with the ends of each bale tightly abutting the adjacent bales.

2. Each bale shall be entrenched in the soil a minimum of 4 inches and placed so the bindings are horizontal.

3. Bales shall be securely anchored in place by either two stakes or re-bars driven through the bale 12 to 18 inches into the ground. The first stake in each bale shall be driven toward the previously laid bale at an angle to force the bales together. Stakes shall be driven flush with the top of the bale.

4. Straw bale dikes shall be inspected frequently and after each rain event and maintenance performed as necessary.

5. All bales shall be removed when the site has been stabilized. The trench where the bales were located shall be graded flush and stabilized.

26.0 SUPER SILT FENCE

Definition

A temporary barrier of Geotextile Class F over chain link fence used to intercept sediment laden runoff from small drainage areas.

Purpose

To reduce runoff velocity and allow the deposition of transported sediment to occur. Limits imposed by ultraviolet light stability of the fabric will dictate the maximum period that the silt fence may be used.

1. Super silt fence provides a barrier that can collect and hold debris and soil, preventing the material from entering critical areas, streams, streets, etc.

2. Super silt fence can be used where the installation of a dike would destroy sensitive areas, woods, wetlands, etc.

3. Super silt fence should be placed as close to the contour as possible. No section of silt fence should exceed a grade of 5% for a distance of more than 50 feet.

Table 30 Design Criteria

Length of the flow contributing to Super Silt Fence shall conform to the following limitations:

Slope	Slope Steepness	Slope Length (maximum)	Silt Fence Length (maximum)
0 - 10%	0 - 10:1	Unlimited	Unlimited
10 - 20%	10:1 - 5:1	200 feet	1,500 feet
20 - 33%	5:1 - 3:1	100 feet	1,000 feet
33 - 50%	3:1 - 2:1	100 feet	500 feet
50% +	2:1 +	50 feet	250 feet

Where ends of the geotextile fabric come together, the ends shall be overlapped, folded, and stapled to prevent sediment bypass.

Construction Specifications

1. Fencing shall be 42 inches in height and constructed in accordance with the latest Maryland State Highway (SHA) Details for Chain Link Fencing. The SHA specification for a 6 foot fence shall be used, substituting 42 inch fabric and 6 foot length posts.

2. Chain link fence shall be fastened securely to the fence posts with wire ties or staples. The lower tension wire, brace and truss rods, drive anchors and post caps are not required except on the ends of the fence.

3. Filter Cloth shall be fastened securely to the chain link fence with ties spaced every 24" at the top and mid section.

4. Filter colth shall be embedded a minimum of 8" into the ground.

5. When two sections of geotextile fabric adjoin each other, they shall be overlapped by 6" and folded.

6. Maintenance shall be performed as needed and silt buildups removed when "bulges" develop in the silt fence, or when silt reaches 50% of the fence height.

7. Filter cloth shall meet the following requirements for Geotextile Class F:

Tension Strength	50 lb/in (min.)	Test: MSMT 509
Tensile Modulus	20 lb/in (min.)	Test: MSMT 509
Flow Rate	0.3 gal/ft^2/minute (max.)	Test: MSMT 322
Filtering Efficiency	75% (min.)	Test: MSMT 322

DETAIL 33 – SUPER SILT FENCE

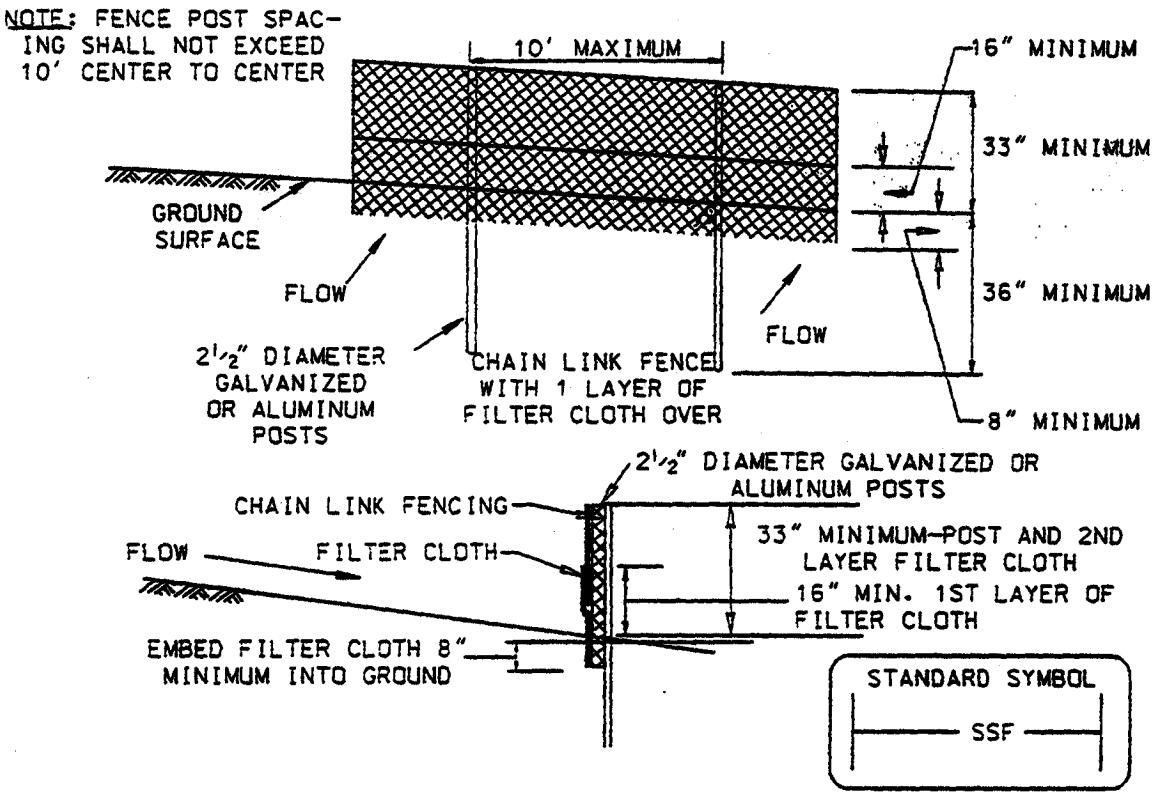

Construction Specifications

Fencing shall be 42 inches in height and constructed in accordance with the latest Maryland State Highway Details for Chain Link Fencing. The specification for a 6 foot fence shall be used, substituting 42 inch fabric and 6 foot length posts.

1. The poles do not need to set in concrete.

2. Chain link fence shall be fastened securely to the fence posts with wire ties or staples.

3. Filter cloth shall be fastened securely to the chain link fence with ties spaced every 24" at the top and mid section.

4. Filter cloth shall be embedded a minimum of 8" into the ground.

5. When two sections of filter cloth adjoin each other, they shall be overlapped by 6" and folded.

6. Maintenance shall be performed as needed and silt buildups removed when "bulges" develop in the silt fence.

SUPER SILT FENCE

Design Criteria

Slope	Slope Steepness	Slope Length (maximum)	Silt Fence Length (maximum)
0 - 10%	0 - 10:1	Unlimited	Unlimited
10 - 20%	10:1 - 5:1	200 feet	1,500 feet
20 - 33%	5:1 - 3:1	100 feet	1,000 feet
33 - 50%	3:1 - 2:1	100 feet	500 feet
50% +	2:1 +	50 feet	250 feet

27.0 SUBSURFACE DRAIN

Definition

A conduit, such as tile, pipe, or tubing, installed beneath the ground surface which intercepts, collects, and/or conveys drainage water.

Purpose

A subsurface drain may serve one or more of the following purposes:

1. Improve the environment for vegetative growth by regulating the water table and groundwater flow.

2. Intercept and prevent water movement into a wet area.

3. Relieve artisan pressures.

4. Remove surface runoff.

5. Provide internal drainage of slopes to improve their stability and reduce erosion.

6. Provide internal drainage behind bulkheads, retaining walls, etc.

7. Replace existing subsurface drains that are interrupted or destroyed by construction operations.

8. Provide subsurface drainage for dry stormwater management structures.

9. Improve dewatering of sediment in sediment basins. (See Standard and Specifications for Sediment Basins.)

Conditions Where Practice Applies

Subsurface drains are used in areas having a high water table or where subsurface drainage is required. The soil shall have enough depth and permeability to permit installation of an effective system. This standard does not apply to storm drainage systems or foundation drains. An outlet for the drainage system shall be available, either by gravity flow or by pumping. The outlet shall be adequate for the quantity of water to be discharged without causing damage above or below the point of discharge and shall comply with state and local laws.

Design Criteria

The design and installation shall be based on adequate surveys and on site soils investigations.

1. Required Capacity of Drains

The required capacity shall be determined by one or more of the following:

a. Where subsurface drainage is to be uniform over an area through a systematic pattern of drains, a drainage coefficient of 1" to be removed in 24 hours shall be used. (See Drain Charts in the Appendix)

b. Where subsurface drainage is to be by a random interceptor system, a minimum inflow rate of 0.5 cfs per 1,000 feet of line shall be used to determine the required capacity. If actual field tests and measurements of flow amounts are available, they may be used for determining capacity. For interceptor subsurface drains on sloping land, increase the inflow rate as follows:

Land Slopes	Increase Inflow Rate By
2 - 5 percent	10 percent
5 - 12 percent	20 percent
Over 12 percent	30 percent

c. Additional design capacity must be provided if surface water is allowed to enter the system.

2. Size of Subsurface Drain

The size of subsurface drains shall be determined from the Drain Charts. All subsurface drains shall have a nominal diameter which equals or exceeds four 4".

3. Depth and Spacing

The minimum depth of cover of subsurface drains shall be 24" where possible. The minimum depth of cover may be reduced to 15" where it is not possible to attain the 24" depth and where the drain is not subject to equipment loading or frost action. Roots from some types of vegetation can plug drains as the drains get closer to the surface.

The spacing of drain laterals will be dependent on the permeability of the soil, the depth of installation of the drain and degree of drainage required. Generally, drains installed 36" deep and spaced 50'center-to-center will be adequate. For more specific information see the "Maryland Drainage Guide".

4. Minimum Velocity and Grade

The minimum grade for subsurface drains shall be 0.10 percent. Where surface water enters the system a velocity of not less than 2' per second shall be used to establish the minimum grades. Provisions shall be made for preventing debris or sediment from entering the system by means of filters or collection and periodic removal of sediment from installed traps.

5. Materials for Subsurface Drains

Acceptable subsurface drain materials include perforated, continuous closed joint conduits of polyethylene plastic, concrete, corrugated metal, asbestos-cement, bituminized fiber, and polyvinyl chloride.

The conduit shall meet strength and durability requirements of the site.

6. Loading

The allowable loads on subsurface drain conduits shall be based on the trench and bedding conditions specified for the job. A factor of safety of not less than 1.5 shall be used in computing the maximum allowable depth of cover for a particular type of conduit.

7.Envelopes and Envelope Materials-

Envelopes shall be used around subsurface drains for proper bedding and to provide better flow into the conduit. Not less than 3" of envelope material shall be used for sand-gravel envelopes. Where necessary to improve the characteristics of flow of groundwater into the conduit, more envelope material may be required.

Where county regulations do not allow sand-gravel envelopes, but require a special type and size of envelope material, they shall be followed.

Envelope material shall be placed to the height of the uppermost seepage strata. Behind bulkheads and retaining walls, it shall go to within twelve inches of the top of the structure. This standard does not cover the design of filter materials where needed.

Materials used for envelopes shall not contain materials which will cause an accumulation of sediment in the conduit or render the envelope unsuitable for bedding of the conduit. Envelope materials shall consist of either geotextile fabric or sand-gravel material, which shall pass a 1 1/2" sieve, 90 to 100 percent shall pass a 3/4" sieve, and not more than 10 percent shall pass a No. 60 sieve.

Geotextile fabric[43] envelopes can be either woven or nonwoven monofilament yarns and shall have a sieve opening ranging from 40-80. The envelope shall be placed in such a manner that once the conduit is installed, it shall completely encase the conduit.

The conduit shall be placed and bedded in a sand-gravel envelope. A minimum of 3" of envelope materials shall be placed on the bottom of a conventional trench. The conduit shall be placed on this and the trench completely filled with envelope material to a minimum depth of 3" above the conduit.

Soft or yielding soils under the drain shall be stabilized where required and lines protected from settlement by adding gravel or other suitable material to the trench, by placing the conduit on plank or other rigid support, or by using long sections of perforated or watertight pipe with adequate strength to insure satisfactory subsurface drain performance.

8.Use of Heavy Duty Corrugated Plastic Drainage Tubing

Heavy duty corrugated drainage tubing shall be specified where rocky or gravelly soils are expected to be encountered during installation operations. The quality of tubing will also be specified when cover over this tubing is expected to exceed 24" for 4", 5", 6", or 8" tubing. Larger size tubing designs will be handled on an individual job basis.

[43] Class F, see Table 27.

9.Auxiliary Structure and Subsurface Drain Protection

The outlet shall be protected against erosion and undermining of the conduit, against damaging periods of submergence, and against entry of rodents or other animals into the subsurface drain. An animal guard shall be installed on the outlet end of the pipe. A continuous 10' section of corrugated metal, cast iron, or steel pipe without perforations shall be used at the outlet end of the line and shall outlet 1.0 foot above the normal elevation of low flow in the outlet ditch or above mean high tide in tidal areas. No envelope material shall be used around the 10' section of pipe. Two-thirds of the pipe shall be buried in the ditch bank and the cantilevered section shall extend to a point above the toe of the ditch side slope. If not possible, the side slope shall be protected from erosion.

Conduits under roadways and embankments shall be watertight and designed to withstand the expected loads.

Where surface water is to be admitted to subsurface drains, inlets shall be designed to exclude debris and prevent sediment from entering the conduit. Lines flowing under pressure shall be designed to withstand the resulting pressures and velocity of flow. Surface waterways shall be used where feasible.

The upper end of each subsurface drain line shall be capped with a tight fitting cap of the same material as the conduit or other durable material unless connected to a structure.

Construction Specifications

1. Deformed, warped, or otherwise damaged pipe or tubing shall not be used.

2. All subsurface drains shall be laid to a uniform line and covered with envelope material. The pipe or tubing shall be laid with the perforations down and oriented symmetrically about the vertical center line. Connections will be made with manufactured functions comparable in strength with the specified pipe or tubing unless otherwise specified. The method of placement and bedding shall be as specified on the drawing.

3. Envelope material shall consist of geotextile fabric or a sand/gravel (which shall pass the 1 1/2" sieve, 90 to 100 percent shall pass 3/4" sieve, and not more than 10 percent shall pass the No. 60 sieve).

4. The upper end of each subsurface drain line shall be capped with a tight fitting cap of the same material as the conduit or other durable material unless connected to a structure.

5. A continuous 10' section of corrugated metal, cast iron, or steel pipe without perforations shall be used at the outlet end of the line. No envelope material shall be used around the 10' section of pipe. An animal guard shall be installed on the outlet end of the pipe.

6. Earth backfill material shall be placed in the trench in such a manner that displacement of the drain will not occur.

7. Where surface water is entering the system, the pipe outlet section of the system shall contain a swing type trash and animal guard.

FIGURE 6 – SUBSURFACE DRAIN

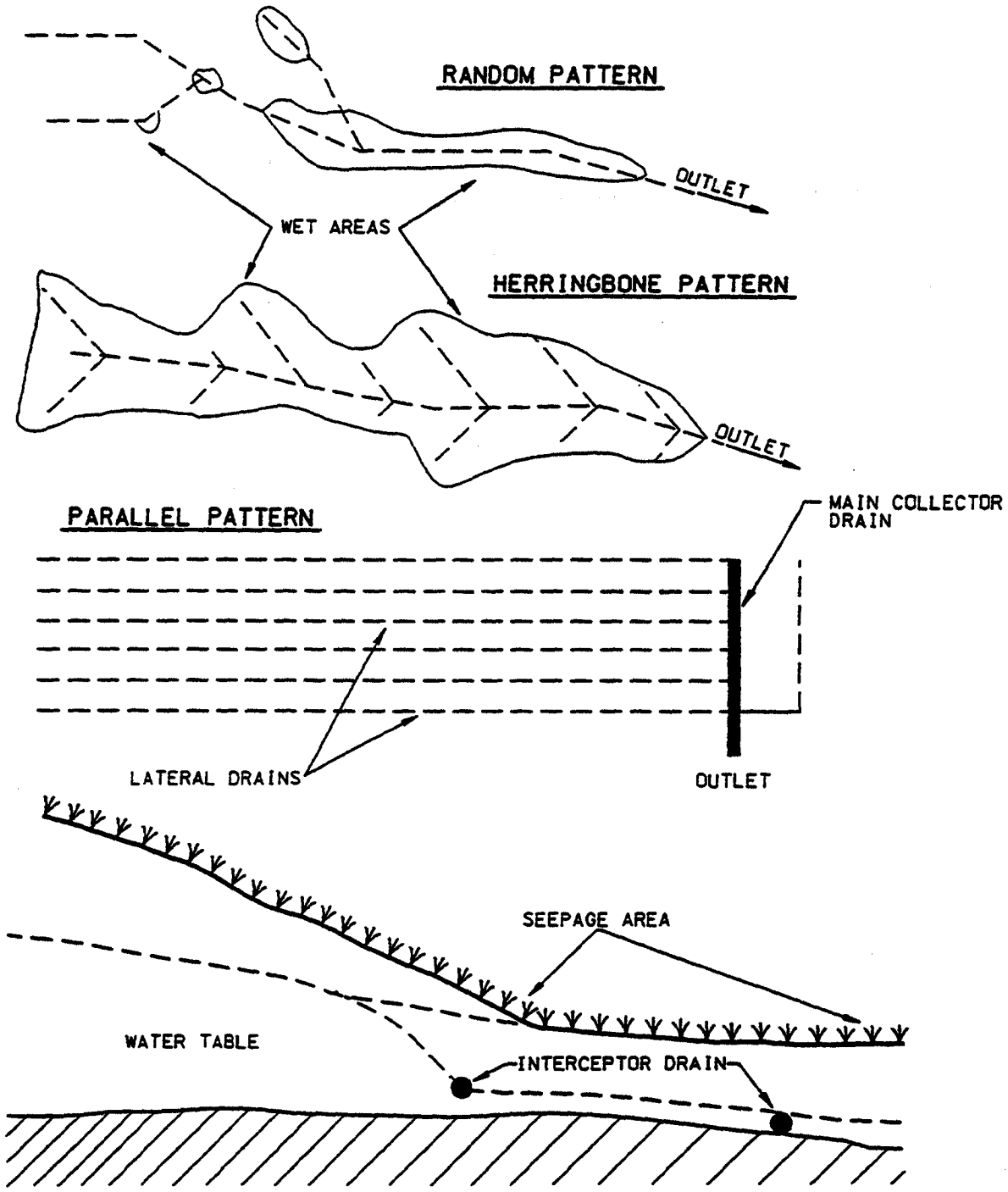

U.S. DEPARTMENT OF AGRICULTURE SOIL CONSERVATION SERVICE	PAGE H – 27 – 5	MARYLAND DEPARTMENT OF ENVIRONMENT WATER MANAGEMENT ADMINISTRATION

1994

28.0 LINED WATERWAY OR OUTLET

Definition

A waterway or outlet with a lining of concrete, stone, or other permanent material. The lined section extends up the side slopes to the designed depth. The earth above the permanent lining may be vegetated or otherwise protected.

Purpose

To provide for the disposal of concentrated runoff without damage from erosion or flooding where grassed waterways would be inadequate due to high velocities.

Scope

This standard applies to waterways or outlets with linings of cast-in-place concrete, flagstone mortared in place, rock rip-rap, gabions, or similar permanent linings. It does not apply to irrigation ditch and canal linings, grassed waterways with stone centers, or small lined sections to carry prolonged low flows, or to reinforced concrete channels. The maximum capacity of the waterway flowing at design depth shall not exceed 100 cubic feet per second.

Conditions Where Practice applies

This practice applies where the following or similar conditions exist:

1. Concentrated runoff is such that a lining is required to control erosion.

2. Steep grades, wetness, prolonged base flow, seepage, or piping would cause erosion.

3. The location is such that damage from use by people or animals precludes use of vegetated waterways or outlets.

4. Soils are highly erosive or other soil and climate conditions preclude using vegetation.

5. High-value property or adjacent facilities warrant the extra cost to contain design runoff in a limited space.

Design criteria

1. Capacity

   a. The minimum capacity shall be adequate to carry the peak rate of runoff from a 10-year, 24-hour storm. Velocity shall be computed using Manning's equation with a coefficient of roughness "n" as follows:

Lined Material	"n"
Concrete (Type):	
Trowel Finish	0.015
Float Finish	0.019
Gunite	0.019
Flagstone	0.022
Rip-rap	Determine from Table 34
Gabion	0.030

b. Rip-rap and filter (bedding) shall be designed in accordance with criteria set forth in the National Cooperative Highway Research Program Report 108, available from the University Microfilm International, 300 N. Ree Road, Ann Arbor, Michigan 48016, Publication No. PB-00839; or Publication No. FHWA-IP-89-016, dated March 1989, available from Federal Highway Admin,, 4009 7th Street, S.W., Washington, Service's Engineering Field Manual, Chapter 16.

2. Velocity

a. Maximum design velocity shall be as shown below. Except for short transition sections, flow with a channel gradient within the range of 0.7 to 1.3 of this flow's critical slope must be avoided unless the channel is straight. Velocities exceeding critical will be restricted to straight reaches.

Design Flow Depth (ft.)	Maximum Velocity (ft./sec.)
0.0 - 0.5	25
0.5 - 1.0	15
Greater than 1.0	10

b. Waterways or outlets with velocities exceeding critical shall discharge into an energy dissipator to reduce velocity to less than critical, or to a velocity the downstream soil and vegetative conditions will allow.

3. Cross Section

The cross section shall be triangular, parabolic, or trapezoidal. Monolithic concrete or gabions may be rectangular.

4. Freeboard

The minimum freeboard for lined waterways or outlets shall be 0.25 feet above design high water in areas where erosion resistant vegetation cannot be grown adjacent to the paved side slopes. No freeboard is required where good vegetation can be grown and is maintained.

5. Side Slope

Steepest permissible side slopes, horizontal to vertical, will be as follows:

a. Non-Reinforced Concrete

i. Hand-placed, formed concrete
Height of lining, 1.5 ft. or less .....Vertical

ii. Hand-placed screened concrete or mortared in place flagstone
Height of lining, less than 2 ft.....1 to 1
Height of lining, more than 2 ft.....2 to 1

b. Slip form concrete:

i. Height of lining, less than 3 ft.....1 to 1

c. Rock rip-rap.....2 to 1

i. Gabions.....Per specifications for gabions

6. Lining Thickness

a. Concrete.....4 in. (In most problem areas, minimum thickness shall be 5 in. with welded wire fabric reinforcing.)

b. Rock rip-rap.....1.5 x maximum stone size plus thickness of filter or bedding

c. Flagstone.....4 in. including mortar bed

7. Related Structures - Side inlets, drop structures, and energy dissipators shall meet the hydraulic and structural requirements of the site.

8. Filters or Bedding - Filters or bedding to prevent piping, reduce uplift pressure, and collect water will be used as required and will be designed in accordance with sound engineering principles. Weep holes and drains will be provided as needed.

9. Concrete

a. Concrete used for lining shall be so proportioned that it is plastic enough for thorough consolidation and stiff enough to stay in place on side slopes. A dense durable product will be required. A mix that can be certified as suitable to produce a minimum strength of at least 3,000 pounds per square inch will be required. Cement used shall be Portland Cement, Type I, II, IV, or V. Aggregate used shall have a maximum diameter of one and one half inches.

b. Weep holes should be provided in concrete footings and retaining walls to allow free drainage of water. Pipe used for weep holes shall be non-corrosive.

10. Mortar - Mortar used for mortared in-place flagstone shall consist of a mix of cement, sand, and water with a water-cement ratio of not more than 6 gallons of water per bag of cement.

11. Contraction Joints - Contraction joints in concrete linings, where required, shall be formed transversely to a depth of about one-third the thickness of the lining at a uniform spacing in the range of 10 to 15 feet.

12. Rock Rip-rap or Flagstone - Stone used for rip-rap or gabions shall be dense and hard enough to withstand exposure to air, water, freezing, and thawing. Flagstone shall be flat for ease of placement and have the strength to resist exposure and breaking.

13. Cutoff - Cutoff walls shall be used at the beginning and ending of concrete lining, and for rock rip-rap lining, shall be keyed into the channel bottom at both ends of the lining.

14. Gabion Baskets - Gabions shall be fabricated in such a manner that the sides, ends, and lid can be assembled at the site into a rectangular basket of similar size. Gabion baskets shall be installed according to the manufacturers specifications.

15. Geotextile fabric

Geotextile Class C[44] shall be placed beneath all rip-rap and gabions. The geotextile fabric shall consist of either woven or non-woven monofilament fiber and shall conform to ASTM D 1777, ASTM D 1682, having a thickness of 20-60 mils, and a grab strength of 90-120 lbs.

Construction Specifications

1. The foundation area shall be cleared of trees, stumps, roots, sod, loose rock, or other objectionable material.

2. The cross-section shall be excavated to the neat lines and grades as shown on the plans. Over-excavated areas shall be backfilled with moist soil compacted to the density of the surrounding material.

3. No abrupt deviations from design grade or horizontal alignment shall be permitted.

4. Concrete linings shall be placed to the thickness shown on the plans and finished in a workmanlike manner. Adequate precautions shall be taken to protect freshly-placed concrete from freezing or extremely high temperatures, to insure proper curing.

5. Filter, bedding, and rock rip-rap shall be placed to line and grade and in the manner specified.

6. Construction operations shall be done in such a manner that erosion, air, and water pollution will be minimized and held within legal limits. The completed job shall present a workmanlike appearance. All disturbed areas shall be vegetated or otherwise protected against soil erosion.

Maintenance

1. Pavement or lining should be maintained as built to prevent undermining and deterioration. Trees should be removed next to pavements, as roots can cause uplift damage.

2. Vegetation next to pavement should be maintained in good condition to prevent scouring if the pavement is overtopped. See Standard and Specifications for Critical Area Stabilization for vegetative details.

[44] Refer to Table 27

Table 34

DETERMINING "n" FOR RIPRAP LINED CHANNEL USING DEPTH OF FLOW

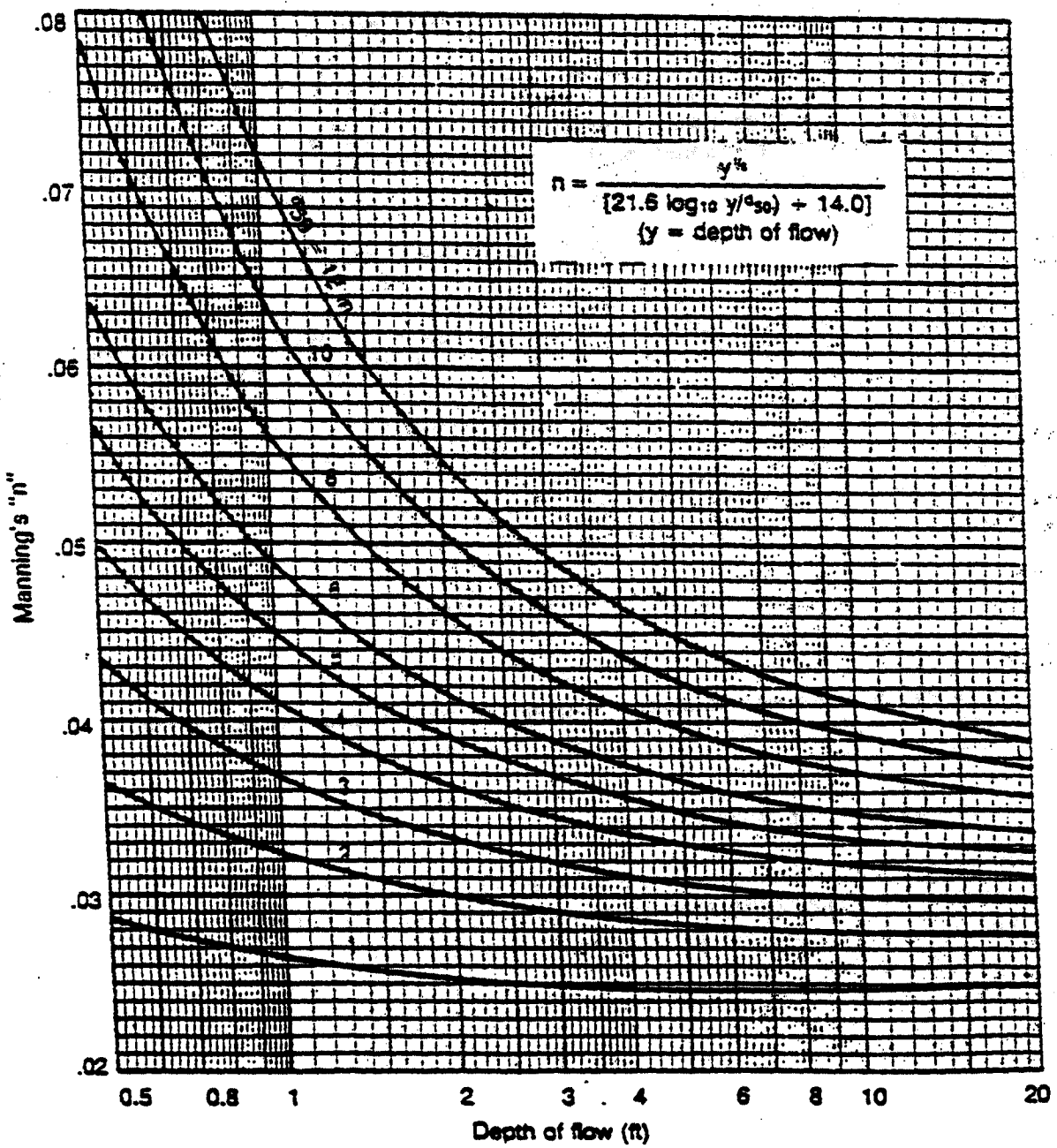

Values of n for riprap-lined channels, d_{50} size vs depth of flow.

29.0 TEMPORARY ACCESS WATERWAY CROSSINGS

Definition

A temporary access waterway crossing is a structure placed across a waterway to provide access for construction purposes for a period of less than one year. Temporary access crossings shall not be utilized to maintain traffic for the general public.

Purpose

The purpose of the temporary access waterway crossing is to provide safe, pollution free access across a waterway for construction equipment by establishing minimum standards and specifications for the design, construction, maintenance, and removal of the structure. Temporary access waterway crossings are necessary to prevent construction equipment from damaging the waterway, blocking fish migration, and tracking sediment and other pollutants into the waterway. These standards and specifications may represent a channel constriction thus the temporary nature of waterway access crossings must be stressed. They should be planned to be in service for the shortest practical period of time and removed as soon as their function is completed.

Conditions Where Practice Applies

Any temporary access crossing shall conform to the technical requirements of these Standards and Specifications as well as any specific requirements imposed by the Water Resources Administration's Waterway Permits Division (301) 974-2265 Annapolis, Maryland. The following standards and specifications for temporary access waterway crossings are applicable in non-tidal waterways. These Standards and Specifications provide designs based on waterway geometry rather than the drainage area contributing to the point of crossing. The principal consideration for development of these Standards and Specifications is concern for soil erosion and sediment control. Structural integrity and safety must also be considered when designing temporary access waterway crossings to withstand expected loads. The three types of standard temporary access waterway crossings are bridges, culverts, and fords.

General Requirements

1. In-stream excavation

In-Stream excavation shall be limited to only that necessary to allow installation and removal of the standard methods as presented below in the individual practices section and shall not take place within the restricted time periods.

2. Elimination of Fish Migration Barriers

Of the three basic methods presented below in the individual practices section, bridges pose the least potential for creating barriers to aquatic migration. The construction of any specific crossing method, shall not cause a significant water level difference between the upstream and downstream water surface elevations.

Stream closure dates for fish spawning or migration within waterways are as follows:

Use I and IP	March 1 - June 15
Use II	June 1 - September 30 and December 16 - March 14
Use III and IIIP	October 1 - April 30
Use IV	March 1 - May 31
SAV (All flowing streams)	April 15 - October 15

Therefore, the stream channel must not be disturbed during these periods. For more information about the closures based on stream uses contact MDE Water Quality Certification Division at (410) 631-3509 and for more information about closures based on submerged aquatic vegetation (SAV) contact the Department of Natural Resources at (410) 974-3841.

3. Crossing Alignment

The temporary waterway crossing shall be at right angles to the stream. Where approach conditions dictate, the crossing may vary 15 degrees from a line drawn perpendicular to the centerline of the stream at the intended crossing location.

4. Road Approaches

The centerline of both roadway approaches shall coincide with the crossing alignment centerline for a minimum distance of 50' from each bank of the waterway being crossed. If physical or right-of-way restraints preclude the 50' minimum, a shorter distance may be provided. All fill materials associated with the roadway approach shall be limited to a maximum height of 2' above the existing floodplain elevation. To the extent possible, the work on the approaches primarily within the floodplain shall be limited to grading to keep the road close to the existing grades.

5. Surface Water Diverting Structure

A water diverting structure such as a swale shall be constructed (across the roadway on both roadway approaches) 50 feet (maximum) on either side of the waterway crossing. This will prevent roadway surface runoff from directly entering the waterway. The 50 feet is measured from the top of the waterway bank. Design criteria for this diverting structure shall be in accordance with the Standards and Specifications for the individual design standard of choice. If the roadway approach is constructed with a reverse grade away from the waterway, a separate diverting structure is not required.

6. Road Width

All crossings shall have one traffic lane. The minimum width shall be 12 feet with a maximum width of 20 feet.

7. Time of Operation

All temporary crossings shall be removed within 14 calendar days after the structure is no longer needed. Unless prior written approval is obtained from the Water Resources Administration, all structures shall be removed within one year from the date of the installation. Removal of the structure shall not take place during the spawning periods for the stream as stated above.

8. Materials:

a. Aggregate - There shall be no earth or soil materials used for construction within the waterway channel. State Highway Administration coarse aggregate designation No. 5, (3/4" to 4") also referenced as AASHTO designation No. 1, shall be the minimum acceptable aggregate size for temporary crossings. Larger aggregates will be allowed.

b. Geotextile fabric - Geotextile fabric is a fabric consisting of either woven or nonwoven plastic, polypropylene, or nylon used to distribute the load, retain fines, allow increased drainage of the aggregate, and reduce mixing of the aggregate with the subgrade soil. Approved geotextile fabrics shall be used, as required by the specific method.

Temporary Access Waterway Crossing Methods

1. Considerations for Choosing a Specific Method

The following criteria for soil erosion and sediment control shall be considered when selecting a specific temporary access waterway crossing standard method:

a. Site aesthetics: Select a standard design method that will least disrupt the existing terrain of the stream reach. Consider the effort that will be required to restore the area after the temporary crossing is removed.

b. Site location: Locate the temporary crossing where there will be the least disturbance to the soils of the existing waterway banks. When possible, locate the crossing at a point receiving minimal surface runoff.

c. Physical site constraints: The physical constraints of a site may preclude the selection of some of the standard methods.

d. Time of year: The time of year may preclude the selection of one or more of the standard methods due to fish spawning or migration restrictions.

e. Vehicular loads and traffic patterns: Vehicular loads, traffic patterns, and frequency of crossings should be considered in choosing a specific method.

f. Maintenance of crossing: The standard methods will require various amounts of maintenance. The bridge method should require the least maintenance, whereas the ford method will probably require more intensive maintenance.

g. Removal of the structure: Ease of removal and subsequent damage to the waterway should be primary factors in considering the choice of a standard method.

Temporary Ford

A temporary access ford is a shallow structure placed in the bottom of the waterway over which the water flows while still allowing traffic to cross the waterway.

Considerations

Temporary fords maybe used when bridge or culvert crossings are not possible and the streambed is armored with naturally occurring bedrock, or can be protected with an aggregate layer in conforming with these specifications.

Construction Specifications

1. Restrictions - Use or removal of a temporary access will not be permitted between - Class III, October 1 through April 30 and Class IV, March 1 through May 31. For other streams, use or removal of a temporary ford will be prohibited from March 1 through June 15 of each year because fish are spawning during this period.

2. The approaches to the structure shall consist of stone pads.

The entire ford approach (where banks were cut) shall be covered with geotextile fabric and protected with aggregate to a depth of 4 inches.

3. Fords shall be prohibited when the stream banks are 4 feet or more in height above the invert of the stream and a bridge or culvert crossing cannot be constructed.

4. The approach roads at the cut banks shall be no steeper than 5:1. Spoil material from the banks shall be stored out of the flood plain and stabilized.

5. One layer of geotextile fabric shall be placed on the streambed, streambanks, and road approaches prior to placing the bedding material on the stream channel or approaches. The geotextile fabric shall extend a minimum of 6 inches and a maximum one foot beyond bedding material.

6. The bedding material shall be coarse aggregate or gabion mattresses filled with coarse aggregate.

7. All fords shall be constructed to minimize the blockage of stream flow and shall allow free flow over the ford. The placing of any material in the waterway bed will cause some upstream ponding. The depth of this ponding will be equivalent to the depth of the material placed within the stream and therefore should be kept to a minimum height. However, in no case will the bedding material be placed deeper than 12 inches or one half (1/2) the height of the existing banks, whichever is smaller.

8. Stabilization - All areas disturbed during ford installation shall be stabilized within 14-calendar days of that disturbance in accordance with the Standards for "Critical Area Stabilization With Permanent Seeding."

Ford Removal and Clean-Up Requirements

Removal and Final Clean-Up

When the temporary structure has served its purpose. Care should be taken so that any aggregate left does not create an impoundment or restrict fish passage. Final clean-up shall consist of removal of excess temporary ford materials from the waterway. All materials shall be stored outside the waterway floodplain.

1. Method - Clean up shall be accomplished without construction equipment working in the stream channel.

2. Approach Disposition - The approach slopes of the cut banks shall not be backfilled.

3. Final Stabilization - All areas disturbed during ford removal shall be stabilized within 14-calendar days of that disturbance in accordance with the Standard for "Critical Area Stabilization With Permanent Seeding."

DETAIL 34 TEMPORARY ACCESS FORD

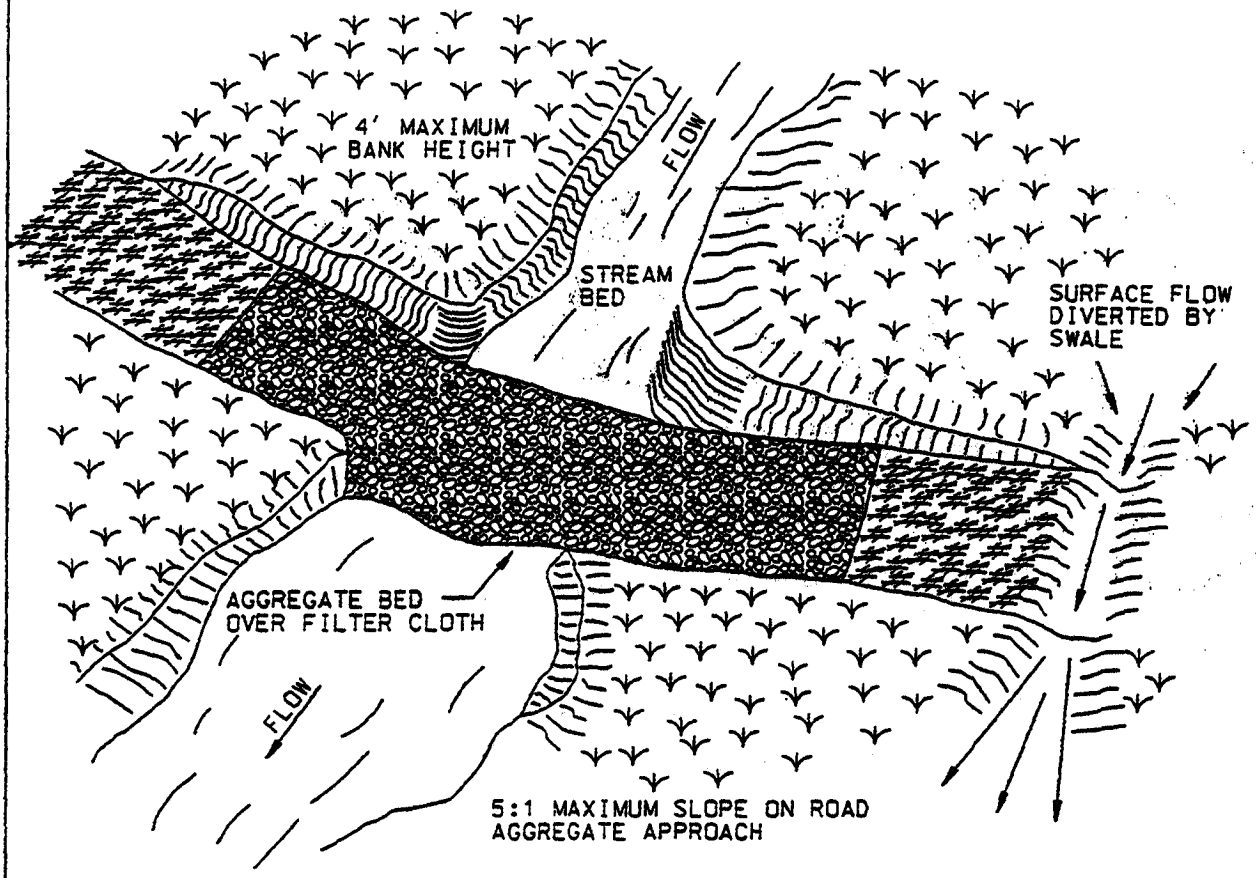

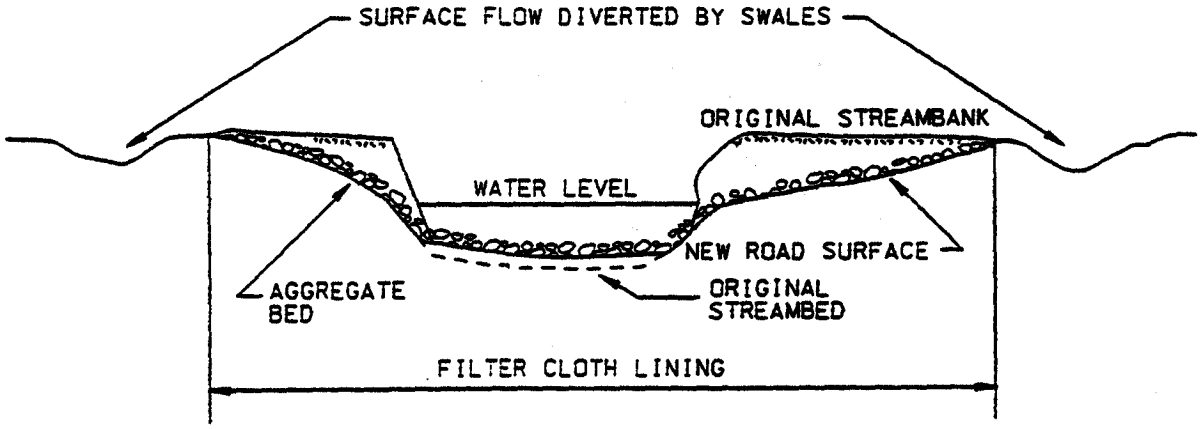

TEMPORARY ACCESS FORD

Construction Specifications

1. Restrictions - Use or removal of a temporary access will not be permitted between October 1 and April 30 for all Class III and Class IV Trout Waters. For other streams, use or removal of a temporary ford will be prohibited from March 1 through June 15 of each year because fish are spawning during this period.

2. The approaches to the structure shall consist of stone pads. The entire ford approach (where banks were cut) shall be covered with filter cloth and protected with aggregate to a depth of 4 inches.

3. Fords shall be prohibited when the stream banks are 4 feet or more in height above the invert of the stream and a bridge or culvert crossing can easily be constructed.

4. The approach roads at the cut banks shall be no steeper than 5:1. Spoil material from the banks shall be stored out of the flood plain and stabilized.

5. One layer of filter cloth shall be placed on the streambed, streambanks, and road approaches prior to placing the bedding material on the stream channel or approaches. The filter cloth shall extend a minimum of 6 inches and a maximum one foot beyond bedding material.

6. The bedding material shall be coarse aggregate or gabion mattresses filled with coarse aggregate.

7. Aggregate used in ford construction shall be SHA Class I.

8. All fords shall be constructed to minimize the blockage of stream flow and shall allow free flow over the ford. The placing of any material in the waterway bed will cause some upstream ponding. The depth of this ponding will be equivalent to the depth of the material placed within the stream and therefore should be kept to a minimum height. However, in no case will the bedding material be placed deeper than 12" or 1/2 the height of the existing banks, whichever is smaller.

9. Stabilization - All areas disturbed during ford installation shall be stabilized within 14-calendar days of that disturbance in accordance with the Standards for Stabilization With Permanent Seeding."

INDIVIDUAL PRACTICES

Temporary Access Bridge

A temporary access bridge is a structure made of wood, metal, or other materials which provides access across a stream or waterway.

Considerations

1. Preferred Method - This is the preferred method for temporary access waterway crossings. Normally, bridge construction causes the least disturbance to the waterway bed and banks when compared to the other access waterway crossings. Disturbance to the stream banks shall be kept to a minimum.

2. Most bridges can be quickly removed and reused.

3. Temporary access bridges pose the least chance for interference with fish migration when compared to the other temporary access waterway crossings.

Construction Specifications

1. Restriction - Construction, use, or removal of a temporary access bridge will not normally have any time of year restrictions since construction, use, or removal should not affect the stream or its banks, unless the bridge is built with a pier(s) in the water.

2. Bridge Placement - A temporary bridge structure shall be constructed at or above the bank elevation to prevent the entrapment of floating materials and debris.

3. Abutments - Abutments shall be placed parallel to, and on, stable banks.

4. Bridge Span - Bridges shall be constructed to span the entire channel. If the channel width exceeds 8 feet, (as measured from top-of-bank to top-of-bank), then a footing, pier, or bridge support may be constructed within the waterway. One additional footing, pier, or bridge support will be permitted for each additional 8 foot width of the channel. However, no footing, pier, or bridge support will be permitted within the channel for waterways less than 8 feet wide.

5. Stringers - Stringers shall either be logs, sawn timber, prestressed concrete beams, metal beams, or other approved materials.

6. Deck Material - Decking materials shall be of sufficient strength to support the anticipated load. All decking members shall be placed perpendicular to the stringers, butted tightly, and securely fastened to the stringers. Decking materials must be butted tightly to prevent any soil material tracked onto the bridge from falling into the waterway below.

7. Run Planks (optional) - Run planking shall be securely fastened to the length of the span. One run plank shall be provided for each track of the equipment wheels. Although run planks are optional, they may be necessary to properly distribute loads.

8. Curbs or fenders - Curbs or fenders may be installed along the outer sides of the deck. Curbs or fenders are an option which will provide additional safety.

9. Bridge Anchors - Bridges shall be securely anchored at only one end using steel cable or chain. Anchoring at only one end will prevent channel obstruction in the event that floodwaters float the bridge. Acceptable anchors are large trees, large boulders, or driven steel anchors. Anchoring shall be sufficient to prevent the bridge from floating downstream and possibly causing an obstruction to the flow.

10. Stabilization - All areas disturbed during installation shall be stabilized within 14 calendar days of the disturbance in accordance with the Standard for "Critical Areas Stabilization With Permanent Seeding."

Bridge Maintenance Requirements

1. Inspection - Periodic inspection shall be performed by the user to ensure that the bridge, streambed, and stream banks are maintained and not damaged.

2. Maintenance - Maintenance shall be performed, as needed to ensure that the structure complies with the standard and specifications. This shall include removal and disposal of any trapped sediment or debris. Sediment shall be disposed of outside of the flood plain and stabilized.

Bridge Removal and Clean-Up Requirements

1. Removal - When the temporary bridge is no longer needed, all structures including abutments and other bridging materials shall be removed within 14 calendar days. In all cases, the bridge materials shall be removed within one year of installation.

2. Final Clean-Up - Final clean-up shall consist of removal of the temporary bridge from the waterway, protection of banks from erosion, and removal of all construction materials. All removed materials shall be stored outside the waterway floodplain.

3. Method - Removal of the bridge and clean up of the area shall be accomplished without construction equipment working in the waterway channel.

4. Final Stabilization - All areas disturbed during removal shall be stabilized within 14 calendar days of that disturbance in accordance with the Standards for "Critical Area Stabilization With Permanent Seeding."

DETAIL 35 TEMPORARY ACCESS BRIDGE

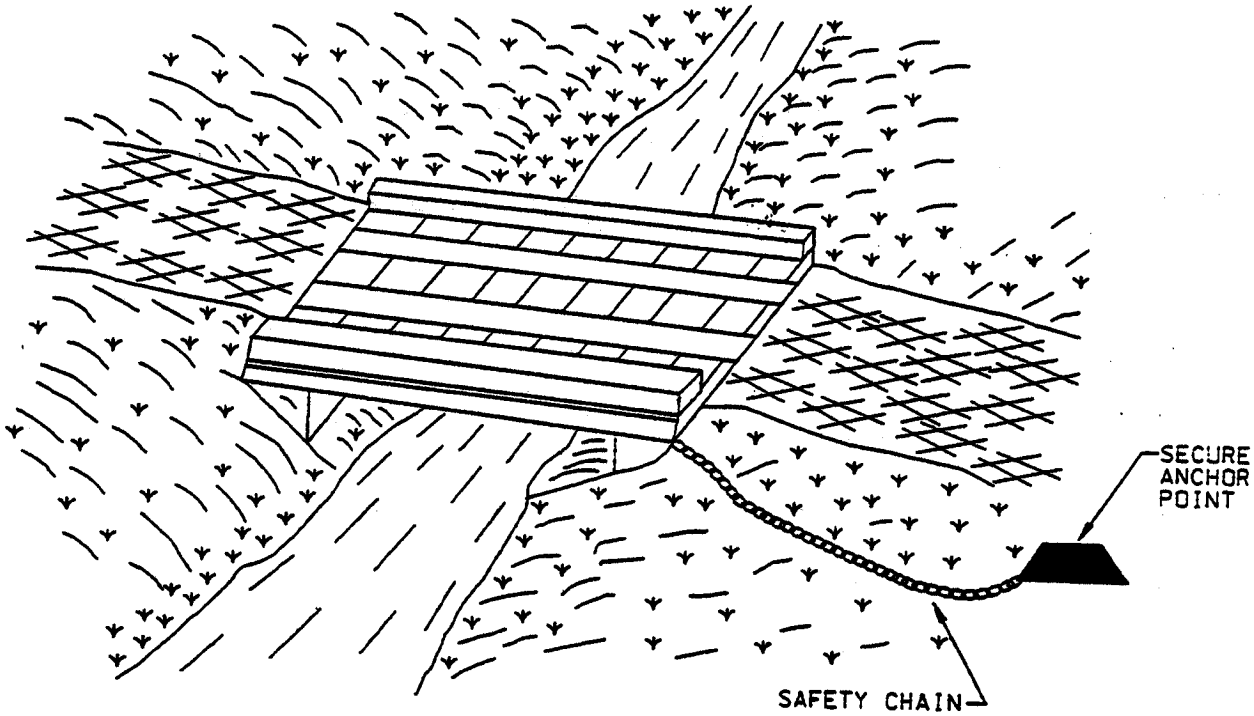

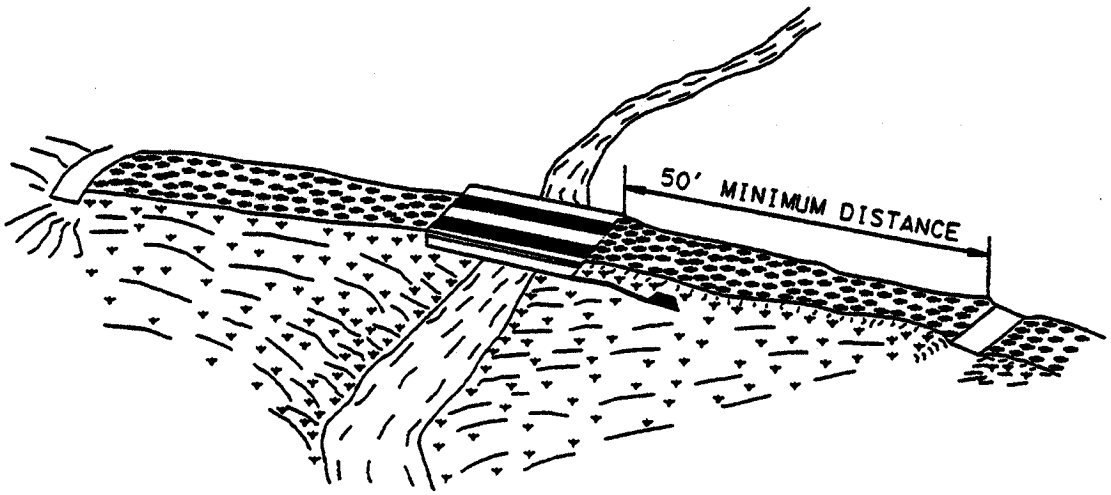

TEMPORARY ACCESS BRIDGE

Construction Specifications

1. Restriction - Construction, use, or removal of a temporary access bridge will not normally have any time of year restrictions since construction, use, or removal should not affect the stream or its banks, unless the bridge is built with a pier(s) in the water.

2. Bridge Placement - A temporary bridge structure shall be constructed at or above the bank elevation to prevent the entrapment of floating materials and debris.

3. Abutments - Abutments shall be placed parallel to, and on, stable banks.

4. Bridge Span - Bridges shall be constructed to span the entire channel. If the channel width exceeds 8 feet, (as measured from top-of-bank to top-of-bank), then a footing, pier, or bridge support may be constructed within the waterway. One additional footing, pier, or bridge support will be permitted for each additional 8 foot width of the channel. However, no footing, pier, or bridge support will be permitted within the channel for waterways less than 8 feet wide.

5. Stringers - Stringers shall either be logs, sawn timber, prestressed concrete beams, metal beams, or other approved materials.

6. Deck Material - Decking materials shall be of sufficient strength to support the anticipated load. All decking members shall be placed perpendicular to the stringers, butted tightly, and securely fastened to the stringers. Decking materials must be butted tightly to prevent any soil material tracked onto the bridge from falling into the waterway below.

7. Run Planks (optional) - Run planking shall be securely fastened to the length of the span. One run plank shall be provided for each track of the equipment wheels. Although run planks are optional, they may be necessary to properly distribute loads.

8. Curbs or fenders - Curbs or fenders may be installed along the outer sides of the deck. Curbs or fenders are an option which will provide additional safety.

TEMPORARY ACCESS BRIDGE

9. Bridge Anchors - Bridges shall be securely anchored at only one end using steel cable or chain. Anchoring at only one end will prevent channel obstruction in the event that floodwaters float the bridge. Acceptable anchors are large trees, large boulders, or driven steel anchors. Anchoring shall be sufficient to prevent the bridge from floating downstream and possibly causing an obstruction to the flow.

10. Stabilization - All areas disturbed during installation shall be stabilized within 14 calendar days of the disturbance in accordance with the Standard for "Critical Areas Stabilization With Permanent Seeding."

Temporary Access Culvert

A temporary access culvert is a structure consisting of a section(s) of circular pipe, pipe arches, or oval pipes of reinforced concrete, corrugated metal, or structural plate, which is used to convey flowing water through the crossing.

Considerations

1. Temporary culverts are used where (1) the channel is too wide for normal bridge construction, (2) anticipated loading may prove unsafe for single span bridges, or (3) access is not needed from bank to bank.

2. This temporary waterway crossing method is normally preferred over a ford type of crossing, since disturbance to the waterway is only during construction and removal of the culvert.

3. Temporary culverts can be salvaged and reused.

Construction Specifications

1. Restrictions - No Construction or removal of a temporary access culvert will be permitted between - Class III, October 1 through April 30 and Class IV, March 1 through May 31. For other streams, use or removal of a temporary ford will be prohibited from March 1 through June 15 of each year because fish are spawning during this period.

2. Culvert Strength - All culverts shall be strong enough to support their cross sectional area under maximum expected loads.

3. Culvert Size - The size of the culvert pipe shall be the largest pipe diameter that will fit into the existing channel without major excavation of the waterway channel or without major approach fills. If a channel width exceeds 3 feet, additional pipes may be used until the cross sectional area of the pipes is greater than 60 percent of the cross sectional area of the existing channel. The minimum size culvert that may be used is a 12" diameter pipe. In all cases, the pipe(s) shall be large enough to convey normal stream flows.

4. Culvert Length - The culvert(s) shall extend a minimum of one foot beyond the upstream and downstream toe to the aggregate placed around the culvert. In no case shall the culvert exceed 40 feet in length.

5. Geotextile fabric - Geotextile fabric shall be placed on the streambed and streambanks prior to placement of the pipe culvert(s) and aggregate. The geotextile fabric shall cover the streambed and extend a minimum six inches and a maximum one foot beyond the end of the culvert and bedding material. Geotextile fabric reduces settlement and improves crossing stability.

6. Culvert Placement - The invert elevation of the culvert shall be installed on the natural streambed grade to minimize interference with fish migration (free passage of fish).

7. Culvert Protection - The culvert(s) shall be covered with a minimum of one foot of aggregate. If multiple culverts are used they shall be separated by at least 12" of compacted aggregate fill.

8. Stabilization - All areas disturbed during culvert installation shall be stabilized within 14 calendar days of the disturbance in accordance with the Standard for "Critical Area Stabilization With Permanent Seeding."

Culvert Maintenance Requirements

1. Inspection - Periodic inspection shall be performed to ensure that the culverts, streambed, and streambanks are not damaged, and that sediment is not entering the stream or blocking fish passage or migration.

2. Maintenance - Maintenance shall be performed, as needed in a timely manner to ensure that structures are in compliance with this standard and specifications. This shall include removal and disposal of any trapped sediment or debris. Sediment shall be disposed of and stabilized outside the waterway floodplain.

Culvert Removal and Clean-Up Requirements

1. Removal - When the crossing has served its purpose, all structures including culverts, bedding and geotextile fabric materials shall be removed within 14 calendar days. In all cases, the culvert materials shall be removed within one year of installation. No structure shall be removed during the spawning season as stated in the general temporary access criteria.

2. Final Clean-up - Final clean-up shall consist of removal of the temporary structure from the waterway, removal of all construction materials, restoration of original stream channel cross section, and protection of the stream banks from erosion. Removed material shall be stored outside of the waterway floodplain.

3. Method - Removal of the structure and clean up of the area shall be accomplished without construction equipment working in the waterway channel.

4. Final Stabilization - All areas disturbed during culvert removal shall be stabilized within 14 calendar days of the disturbance in accordance with the Standard for "Critical Area Stabilization With Permanent Seeding."

DETAIL 36 TEMPORARY ACCESS CULVERT

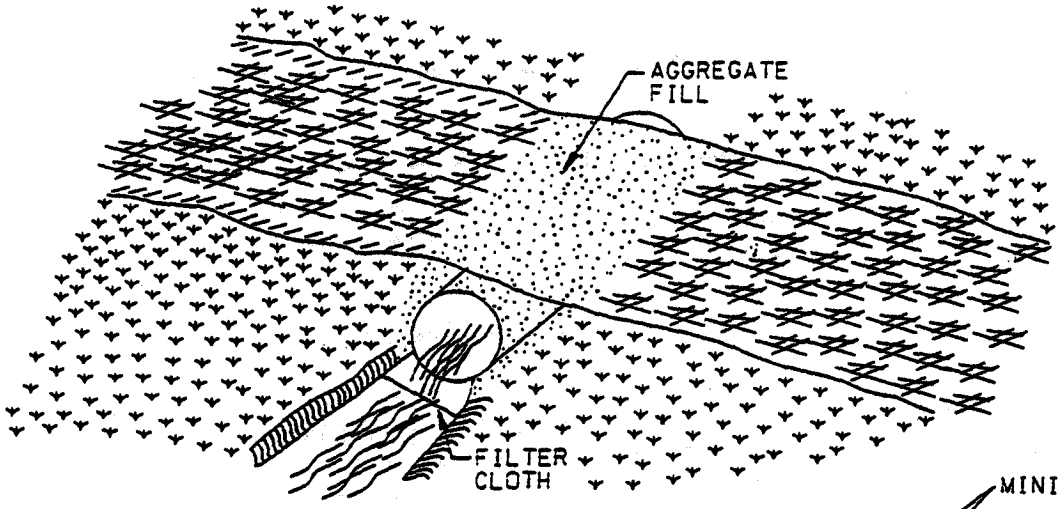

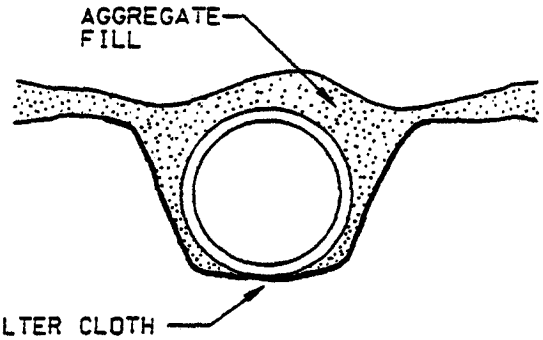

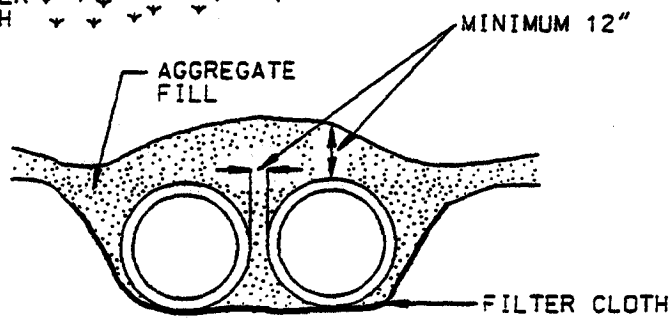

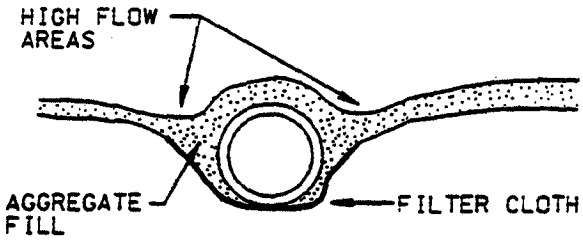

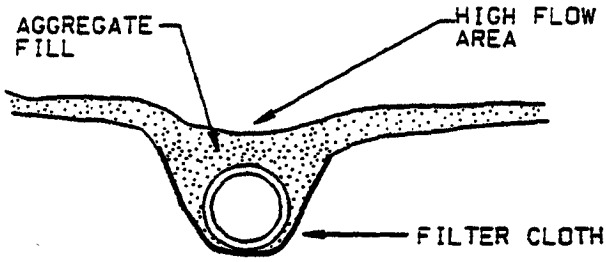

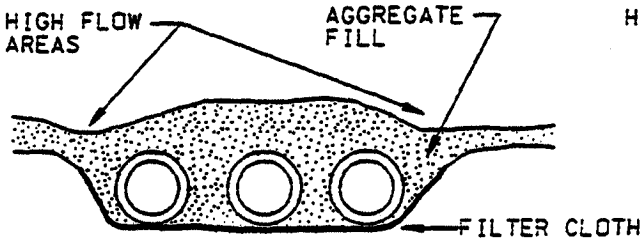

MULTIPLE PIPES

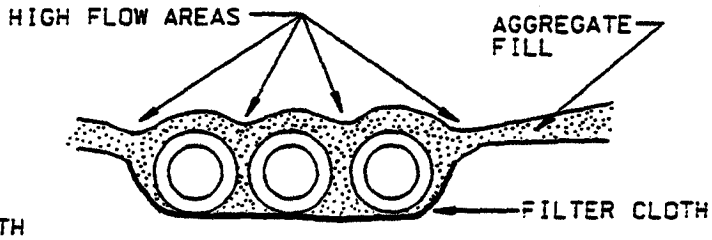

MULTIPLE PIPES

TEMPORARY ACCESS CULVERT

Construction Specifications

1. Restrictions - No Construction or removal of a temporary access culvert will be permitted between October 1 through April 30 for Class III and Class IV Trout Waters or between March 1 through June 15 for non-trout waterways.

2. Culvert Strength - All culverts shall be strong enough to support their cross sectional area under maximum expected loads.

3. Culvert Size - The size of the culvert pipe shall be the largest pipe diameter that will fit into the existing channel without major excavation of the waterway channel or without major approach fills. If a channel width exceeds 3 feet, additional pipes may be used until the cross sectional area of the pipes is greater than 60 percent of the cross sectional area of the existing channel. The minimum size culvert that may be used is a 12" diameter pipe. In all cases, the pipe(s) shall be large enough to convey normal stream flows.

4. Culvert Length - The culvert(s) shall extend a minimum of one foot beyond the upstream and downstream toe to the aggregate placed around the culvert. In no case shall the culvert exceed 40 feet in length.

5. Filter Cloth - Filter cloth shall be placed on the streambed and streambanks prior to placement of the pipe culvert(s) and aggregate. The filter cloth shall cover the streambed and extend a minimum six inches and a maximum one foot beyond the end of the culvert and bedding material. Filter cloth reduces settlement and improves crossing stability.

6. Culvert Placement - The invert elevation of the culvert shall be installed on the natural streambed grade to minimize interference with fish migration (free passage of fish).

7. Culvert Protection - The culvert(s) shall be covered with a minimum of one foot of aggregate. If multiple culverts are used they shall be separated by at least 12" of compacted aggregate fill. At a minimum, the bedding and fill material used in the construction of the temporary access culvert crossings shall conform with the aggregate requirements cited in Section I.H.1. above.

8. Stabilization - All areas disturbed during culvert installation shall be stabilized within 14 calendar days of the disturbance in accordance with the Standard for "Critical Area Stabilization With Permanent Seeding."

30.0 DUST CONTROL

Definition

Controlling dust blowing and movement on construction sites and roads.

Purpose

To prevent blowing and movement of dust from exposed soil surfaces, reduce on and off-site damage, health hazards, and improve traffic safety.

Conditions Where Practice Applies

This practice is applicable to areas subject to dust blowing and movement where on and off-site damage is likely without treatment.

Specifications

Temporary Methods

1. Mulches - See standards for vegetative stabilization with mulches only. Mulch should be crimped or tacked to prevent blowing.

2. Vegetative Cover - See standards for temporary vegetative cover.

3. Tillage - To roughen surface and bring clods to the surface. This is an emergency measure which should be used before soil blowing starts. Begin plowing on windward side of site. Chisel-type plows spaced about 12" apart, spring-toothed harrows, and similar plows are examples of equipment which may produce the desired effect.

4. Irrigation - This is generally done as an emergency treatment. Site is sprinkled with water until the surface is moist. Repeat as needed. At no time should the site be irrigated to the point that runoff begins to flow.

5. Barriers - Solid board fences, silt fences, snow fences, burlap fences, straw bales, and similar material can be used to control air currents and soil blowing. Barriers placed at right angles to prevailing currents at intervals of about 10 times their height are effective in controlling soil blowing.

6. Calcium Chloride - Apply at rates that will keep surface moist. May need retreatment.

Permanent Methods

1. Permanent Vegetation - See standards for permanent vegetative cover, and permanent stabilization with sod. Existing trees or large shrubs may afford valuable protection if left in place.

2. Topsoiling - Covering with less erosive soil materials. See standards for topsoiling.

3. Stone - Cover surface with crushed stone or coarse gravel.

References

1. Agriculture Handbook 346. Wind Erosion Forces in the United States and Their Use in Predicting Soil Loss.

2. Agriculture Information Bulletin 354. How to Control Wind Erosion, USDA-ARS.

31.0 GLOSSARY

AASHTO - American Association of State Highway & Transportation Officials (Formerly AASHO.)

ACCEPTABLE OUTLET - That point where storm water runoff can be released into a watercourse or drainage way of adequate capacity without causing scour or erosion.

ACID SOIL - A soil giving an acid reaction throughout most or all of the portion occupied by roots. (Precisely, below a pH of 7.0; practically, below a pH of 6.6.)

ALLUVIAL FAN - A sloping, fan shaped mass of sediment deposited by a stream where it emerges from an upland onto a plain.

ALLUVIUM - A general term for all detrital material deposited or in transit by streams, including gravel, sand silt, clay and all variations and mixtures of these. Unless otherwise noted, alluvium is unconsolidated.

ANGLE OF REPOSE - The stable angle between the horizontal and the maximum slope that a soil assumes through natural processes which will not slough.

ANTI-SEEP COLLAR - An impermeable diaphragm usually of sheet metal or concrete constructed at intervals within the zone of saturation along the conduit of a principal spillway to increase the seepage length along the conduit and thereby prevent piping or seepage along the conduit.

ANTI-VORTEX DEVICE - A device designed and placed on the top of a riser or at the entrance of a pipe to prevent the formation of a vortex in the water at the entrance.

APRON - A floor or lining to protect a surface from erosion, for example, the pavement below chutes, spillways, or at the toes of dams.

ASPECT - The direction a slope faces - a physiographic feature of steep slopes which influences plant growth and adaptation.

ATTERBERG LIMITS - Atterberg limits are soil properties measured for soil materials passing the No. 40 sieve.

> Liquid Limit (LL) - the liquid limit is the water content corresponding to the arbitrary limit between the liquid & plastic states of consistency of a soil.
>
> Plastic Limit (PL) - The plastic limit is the water content corresponding to an arbitrary limit between the plastic and semisolid states of consistency of a soil.
>
> Plasticity Index (PI) - The plasticity index is the numerical difference between the liquid limit and plastic limit.

BAFFLES - Vanes, guides, grids, grating or similar devices placed in a conduit to deflect or regulate flow and effect a more uniform distribution of velocities.

BARREL - The usually mild sloping closed conduit used to convey water under or through a dam; part of a principal spillway.

BASE FLOW - The stream discharge from ground water accretion.

BEDLOAD - The sediment that moves by sliding, rolling or bounding on or very near the streambed; sediment moved mainly by tractive or gravitational forces or both but at velocities less than the surrounding flow.

BERM - A shelf that breaks the continuity of a slope.

BIODEGRADABLE - Capable of being broken down (degraded) by common soil organisms.

BLIND DRAIN - A type of drain consisting of an excavated trench refilled with pervious material, such as coarse sand, gravel or crushed stone, through whose voids water percolates and flows to an outlet. Often referred to as a French drain because of its initial development and widespread use in France.

BRACKISH (WATER) - Slightly to moderately salty water.

BULKHEAD - A wall made from wood, steel, concrete, etc. for protection of shoreline from waves or currents.

CALCIUM SULFATE - Gypsum. A hydrated form used to treat high sodium soils.
$CaSO_4$

CHANNEL - A natural stream that conveys water; a ditch or channel excavated for the flow of water.

CHANNEL IMPROVEMENT - The improvement of the flow characteristics of a channel by clearing, excavation, realignment, lining, or other means in order to increase its water carrying capacity.

CHANNEL STABILIZATION - Erosion prevention and stabilization of velocity distribution in a channel using jetties, drops, revetments, structural linings, vegetation and other measures.

CHANNEL STORAGE - Water temporarily stored in channels while enroute to an outlet.

CHECK DAM - A small dam construction in a gully or other small watercourse to decrease the stream flow velocity (by reducing the channel gradient), minimize channel scour, and promote deposition of sediment.

CHUTE - A high velocity, open channel for conveying water to a lower level without erosion.

CLAY (SOILS) - 1. A mineral soil separate consisting of particles less than 0.002 millimeter in equivalent diameter. 2. A soil texture class. 3. (Engineering) A fine grained soil (more than 50 percent passing the No. 200 sieve) that has a high plasticity index in relation to the liquid limit. (Unified Soil Classification System)

COMPACTION - To unite firmly. With respect to construction work with soils, engineering compaction is any process by which the soil grains are rearranged to decrease void space and bring them into closer contact with one another, thereby increasing the weight of solid material per unit of volume, increasing the shear and bearing strength and reducing permeability.

CONDUIT - Any channel intended for the conveyance of water, whether open or closed.

CONTOUR - 1. An imaginary line on the surface of the earth connecting points of the same elevation. 2. A line drawn on a map connecting points of the same elevation.

COOL (SLOPE. EXPOSURE) - A slope facing north or east, or a slope shaded during the hot part of the day.

CORDGRASS - Grasses of genus Spartina which are so named because of seed heads which have the appearance of coarse cord. These grasses are important soil binders along saltwater shorelines and marshes.

CORE TRENCH - A trench, filled with relatively impervious material intended to reduce seepage of water through porous strata.

CRADLE (ENGINEERING) - A structure usually of concrete shaped to fit around the bottom and sides of a conduit to support the conduit, increase its strength and in dams, to fill all voids between the underside of the conduit and the soil.

CREST - 1. the top of a dam, dike, spillway or weir, frequently restricted to the overflow portion. 2. The summit of a wave or peak of a flood.

CRITICAL AREA OR SITE - Sediment producing, highly erodible or severely eroded areas.

CRITICAL DEPTH (HYDRAULICS) - Depth of flow in a channel of specified dimensions at which specific energy is a minimum for a given discharge.

CROWN (OF SLOPE) - Top of slope; apex.

CRUSHED STONE - Aggregate consisting of angular particles produced by mechanically crushing rock.

CULM - The stem of grasses, sedges and rushes which is jointed and usually hollow in grasses and usually solid in sedges and rushes.

CULTIPACKER SEEDER - A farm tool equipped with a seedbox which drops the seed between cultipacker rollers to place the seed to firm soil where they will be pressed into soil by the second corrugated roller.

CUT - Portion of land surface or area from which earth has been removed or will be removed by excavation; the depth below original ground surface to excavated surface.

CUT-AND-FILL - Process of earth moving by excavating part of an area and using the excavated material for adjacent embankments or fill areas.

CUTOFF - A wall or other structure, such as a trench, filled with relatively impervious material intended to reduce seepage of water through porous strata.

CUTTINGS - A small shoot cut from a plant to start a new plant.

CYCLONE (SEEDER) - A hand turned or tractor drawn seeder that broadcasts seed onto the seedbed by a rotary motion that slings the seed outward from the seeder.

DAM - A barrier to confine or raise water for storage or diversion, to create a hydraulic head, to prevent gully erosion, or for retention of soil, sediment or other debris.

DEBRIS - Broken remains of plants, objects and rocks that form trash or remains.

DECIDUOUS - Plants that shed their leaves annually as opposed to evergreen.

DEPOSITION - The accumulation of material dropped because of a slackening movement of the transporting agent, water or wind.

DESICCATION - Drying out as of root systems of plants before they are planted.

DESILTING AREA - An area of grass, shrubs or other vegetation used for inducing deposition of silt and other debris from slowing water, located above a pond, field or other area needing protection from sediment accumulation. (See filter strip.)

DETENTION DAM - A dam constructed for the purpose of temporary storage of stream flow or surface runoff which releases the stored water at controlled rates.

DIKE (ENGINEERING) - An embankment to confine or control water, for example, one built along the banks of a river to prevent overflow or lowlands; a levee.

DISTURBED AREA - An area in which the natural vegetative soil cover has been removed or altered and, therefore, is susceptible to erosion.

DIVERSION - A channel with a supporting ridge on the lower side constructed across the slope to divert water from areas where it is in excess to sites where it can be used or disposed of safely. Diversions differ from terraces in that they are individually designed.

DOLOMITIC (LIMESTONE) - Liming materials that contain more than 6 percent magnesium (mg); high magnesium lime.

DRAIN (NOUN) - 1. A buried pipe or other conduit (subsurface drain). 2. A ditch or channel (open drain) for carrying off surplus surface water or groundwater.

DRAIN (VERB) - 1. To provide channels, such as open ditches or closed drains, so that excess water can be removed by surface flow or internal flow. 2. To lose water (from the soil) by percolation.

DRAINAGE - 1. The removal of excess surface water or ground water from land by means of surface or subsurface drains. 2. Soils characteristics that affect natural drainage.

DRAINAGE AREA (WATERSHED) - All land and water area from which runoff may run to a common (design) point.

DRAUGHTY (SOIL OR SLOPE) - Lacking moisture during part of the growing season during a typical year.

DROP INLET SPILLWAY - An outfall structure in which the water drops through a vertical riser connected to a discharge conduit.

DROP SPILLWAY - An outfall structure in which the water drops over a vertical wall onto an apron at a lower elevation.

DROP STRUCTURE - A structure for dropping water to a lower level and dissipating surplus energy; a fall. The drop may be vertical or inclined.

DRY STORAGE - The 1800 cubic feet of storage in a trap or basin that is dewatered after rain events.

EMERGENCY SPILLWAY - A dam spillway designed and constructed to discharge flow in excess of the principal spillway design discharge.

ENERGY DISSIPATOR - A designed device such as an apron of rip-rap or a concrete structure placed at the end of a water transmitting apparatus such as pipe, paved ditch or paved chute for the purpose of reducing the velocity, energy and turbulence of the discharged water.

ENTRANCE HEAD - The head required to cause flow into a conduit or other structure, including both entrance loss and velocity head.

EROSION - 1. The wearing away of the land surface by running water, wind, ice, or other geological agents, including such processes as gravitational creep. 2. Detachment and movement of soil or rock fragments by water, wind, ice or gravity. The following terms are used to describe different types of water erosion:

Accelerated erosion - Erosion much more rapid than normal, natural or geological erosion, primarily as a result of the influence of the activities of man or, in some cases, of other animals or natural catastrophes that expose base surfaces, for example, fires.

Gully erosion - The erosion process whereby water accumulates in narrow channels and, over short periods, removes the soil from this narrow area to considerable depths, ranging from 1 or 2 feet to as much as 75 to 100 feet.

Rill erosion - An erosion process in which numerous small channels only several inches deep are formed. See rill.

Sheet erosion - The spattering of small soil particles caused by the impact of raindrops on wet soils. The loosened and spattered particles may or may not subsequently removed by surface runoff.

EROSIVE VELOCITIES - Velocities of water that are high enough to wear away the land surface. Exposed soil will generally erode faster than stabilized soils. Erosive velocities will vary according to the soil type, slope, structural or vegetative stabilization used to protect the soil.

ESTHETIC (AESTHETIC) - Pleasing in appearance; showing good taste.

EVERGREEN - Plants which have leaves or needles yearlong as opposed to those that lose their leaves during part of the year.

EXCELSIOR BLANKET - An erosion retardant material made from excelsior strands held together with net-like stands of plastic or other material.

EXPOSURE (SLOPE) -

North - Slopes facing in any compass direction clockwise between N45W and S45E.

South - Those slopes which face in any compass direction clockwise between S45E and N45W.

FILTER STRIP - A strip of permanent vegetation above ponds, diversions and other structures to retard flow of runoff water, causing deposition of transported material, thereby reducing sediment flow.

FINES (SOIL) - Generally refers to the silt and clay size particles in soil.

FREEBOARD (HYDRAULICS) - The distance between the maximum water surface elevation anticipated in design and the top of retaining banks or structures. Freeboard is provided to prevent overtopping due to unforeseen conditions.

GABION - A flexible woven-wire basket composed of two to six rectangular cells filled with small stones. Gabions may be assembled into many types of structures such as revetments, retaining walls, channel liners, drop structures and groins.

GABION MATTRESS - A thin gabion, usually six or nine inches thick, used to line channels for erosion control.

GRADE - 1. The slope of a road, channel or natural ground. 2. The finished surface of a canal bed, roadbed, top of embankment, or bottom of excavation; any surface prepared for the support of construction, like paving or laying a conduit. 3. To finish the surface of a canal bed, roadbed, top of embankment or bottom of excavation.

GRAFTING - A method of propagating plants by joining wood from one plant to another plant to get more desirable growth on the second plant.

GRASSED WATERWAY - A natural or constructed waterway, usually broad and shallow covered with erosion resistant grasses, to convey surface water down the slope.

GRAVEL - 1. Aggregate consisting of mixed sizes of 1/4 inch to 3 inch particles which normally occur in or near old streambeds and have been worn smooth by the action of water. 2. A soil having particle sizes, according to the Unified Soil Classification System, ranging from the No. 4 sieve size angular in shape as produced by mechanical crushing.

GRAVEL FILTER - Washed and graded sand and gravel aggregate placed around a drain or well screen to prevent the movement of fine materials from the aquifer into the drain or well.

GROIN - A shore protection structure built (usually perpendicular to the shoreline) to trap littoral drift or retard erosion of the shoreline.

GROUND COVER - Plants which are low-growing and provide a thick growth which protects the soil as well as providing some beautification of the area occupied.

GULLY - A channel or miniature valley cut by concentrated runoff through which water commonly flows only during and immediately after heavy rains or during the melting of snow. The distinction between gully and rill is one of depth. A gully is sufficiently deep that it would not be obliterated by normal tillage operations, whereas a rill is of lessor depth and would be smoothed by ordinary farm tillage.

HEAD (HYDRAULICS) - 1. The height of water above any plane of reference. 2. The energy, either kinetic or potential, possessed by each unit weight of a liquid expressed as the vertical height through which a unit weight would have to fall to release the average energy possessed. Used in various terms such as pressure head, velocity head, and head loss.

HERBACEOUS PERENNIAL (PLANTS) - A plant whose stems die back to the ground each year.

HERBICIDE - Chemical formulation used to control weeds or brush.

HULLED (SEED) - Hulless seed, such as sericea lespedeza. Seed are usually processed after threshing to take off outer hull to facilitate scarification and quicken germination.

HYDRAULIC GRADE LINE - In a closed conduit a line joining the elevations to which water could stand in risers or vertical pipes connected to the conduit at their lower end and open at their upper end. In open channel flow, the hydraulic grade line is the free water surface.

HYDRAULIC GRADIENT - The slope of the hydraulic grade line. The slope of the free surface of water flowing in an open channel.

HYDRAULIC JUMP - The sudden turbulent rise in water level from a flow stage below critical depth to flow stage above critical depth, during which the velocity passes from super critical to subcritical.

HYDROGRAPH - A graph showing variation in stage (depth) or discharge of a stream of water over a period of time.

HYDROSEEDER - A machine designed to apply seed, fertilizer, lime and short fiber wood or paper mulch to the soil surface.

HYDRO-SEEDING - Seeding with a hydroseeder.

INFLOW PROTECTION - A water handling device used to protect the transition area between any water conveyance (dike, swale, or swale dike) and a sediment trapping device.

INTERCEPTOR DRAIN - A surface or subsurface drain, or a combination of both, designed and installed to intercept flowing water.

LIME - Basic calcareous materials used to raise pH of acid soils for benefit of plants being grown. May be either ground limestone or hydrated lime.

LITTORAL DRIFT - The sedimentary material moved in the littoral zone under the influence of waves and currents.

MANNING'S FORMULA (HYDRAULICS) - A formula used to predict the velocity of water flow in an open channel or pipeline:

$$V = \frac{1.486}{n} R^{2/3} S^{1/2}$$

Where V is the mean velocity of flow in feet per second; R is the hydraulic radius; S is the slope of the energy gradient or for assumed uniform flow the slope of the channel, in feet per foot; and n is the roughness coefficient or retardance factor of the channel lining.

MULCH - Covering on surface of soil to protect and enhance certain characteristics, such as water retention qualities.

MULCH ANCHORING TOOL - A tool that looks like a dull disk designed to press straw and similar mulches into the soil to prevent loss due to wind, water or gravity.

NETTING (MULCH) - Paper or cotton material used to hold mulch material on the soil surface.

NITROGEN - FIXING (BACTERIA) - Bacteria having the ability to fix atmospheric nitrogen, making it available for use by plants. Inoculation of legume seeds is one way to insure a source of these bacteria for specified legumes.

NON-EROSIVE VELOCITY - Controlling the velocity of water to prevent detachment and movement of soil or rock. Erosive velocity will vary according to the soil type, slope, structural or vegetative stabilization used to protect the soil.

NORMAL DEPTH - Depth of flow in an open conduit during uniform flow for the given conditions. (See uniform flow.)

NOXIOUS WEEDS - Harmful; undesirable; hard to control.

a. Restricted - May be sold in the trade but are limited to very small amounts as undesirable contaminates.

b. Prohibited - Prohibited from sale.

OUTFALL - The point where water flows from a conduit, stream or drain.

OUTLET - The point at which water discharges from such things as a stream, river, lake, tidal basin, pipe, channel or drainage area.

OUTLET CHANNEL - A waterway constructed or altered primarily to carry water form man-made structures such as terraces, subsurface drains, diversions and impoundments.

OVERFALL - Abrupt change in stream channel elevation; the part of a dam or weir notch over which the water flows.

PAPER FIBER - A short fiber mulch material usually applied by hydroseeder along with fertilizer and seed.

PARENT MATERIAL - The unconsolidated rock material from which the soil profile develops.

PENDULOUS - More or less hanging or inclined downward.

PERMANENT SEEDING - Results in establishing perennial vegetation which may remain on the area for many years.

PERMISSIBLE VELOCITY (HYDRAULICS) - The highest average velocity at which water may be carried safely in a channel or other conduit. The highest velocity that can exist through a substantial length of a conduit and not cause scour of the channel. A safe, non-eroding or allowable velocity.

pH - A number denoting the common logarithm of the reciprocal of the hydrogen ion concentration. A pH of 7.0 denotes neutrality, higher values indicate alkalinity, and lower values indicate acidity.

PHREATIC LINE - The upper surface of the zone of saturation in an embankment is the phreatic (zero pressure) surface; in cross-section, this is called the phreatic line.

PIPING - Removal of soil material through subsurface flow channels or "pipes" developed by seepage water.

PLUGS - Pieces of turf or sod, usually cut with a round tube, which can be used to propagate the turf or sod by vegetative means.

PROJECTION - In sediment basins or other dams the perpendicular distance that the anti-seep collar extends from the outside surface of the pipe or pipe cradle.

RECYCLED CONCRETE EQUIVALENT - May be substituted for stone or rip-rap as called for in these specifications except where stone must be "washed". Concrete used in place of stone shall be broken into the stone sizes required for the application, shall be angular, resist crumbling and shall contain no steel reinforcement.

RETENTION - The amount of precipitation on a drainage area that does not escape as runoff. It is the difference between total precipitation and total runoff.

REVETMENT - Facing of stone or other material, either permanent or temporary, placed along the edge of a stream or shoreline to stabilize the bank and to protect it from the erosion action of water.

RHIZOME - Any prostrate, more or less elongated stem growing partly or completely beneath the surface of the ground; usually rooting at the nodes and becoming upcurved at the apex.

RIGHT-OF-WAY - Right of passage, as over another's property. A route that is lawful to use. A strip of land acquired for transport or utility construction.

RILL - A small channel cut by concentrated runoff but through which water commonly flows only during and immediately after rains or during the melting of snow. A rill is usually only a few inches deep (but no more than a foot) and, hence, no obstacle to tillage operations.

RIP-RAP - Broken rock, cobbles, or boulders placed on earth surfaces, such as the face of a dam or the bank of a stream, for protection against the action of water (waves); also applies to brush or pole mattresses, or brush and stone, or similar materials used for soil erosion control.

ROUGHNESS COEFFICIENT (HYDRAULICS) - A factor in velocity and discharge formulas representing the effect of channel roughness on energy losses in flowing water. Manning's "n" is a commonly used roughness coefficient.

RUNOFF (HYDRAULICS) - That portion of the precipitation on a drainage area that is discharged from the area in the stream channels. Types include surface runoff, ground water runoff or seepage.

SALINE SOIL - A non-alkali soil containing sufficient soluble salts to impair plant growth.

SAND - 1. (Agronomy) A soil particle between 0.05 and 2.0 millimeters in diameter. 2. A soil textural class. 3. (Engineering) According to the Unified Soil Classification System, a soil particle larger than the No. 200 sieve (0.074mm) and passing the No. 4 sieve (approximately 1/4 inch).

SCD - Soil Conservation District.

SEDIMENT - Solid material, both mineral and organic, that is in suspension, is being transported, or has been moved from its site of origin by air, water, gravity, or ice and has come to rest on the earth's surface either above or below sea level.

SEDIMENTATION - Deposition of detached soil particles.

SEDIMENT DISCHARGE (SEDIMENT LOAD) - The quantity of sediment, measured in dry weight or by volume, transported through a stream cross-section in a given time. Sediment discharge consists of both suspended load and bedload.

SEEPAGE - 1. Water escaping through or emerging from the ground. 2. The process by which water percolates through the soil.

SEEPAGE LENGTH - In sediment basins or ponds, the length along the pipe and around the anti-seep collars that is within the seepage zone through an embankment. (See "phreatic line".)

SHA - Maryland State Highway Administration.

SHEET FLOW - Water, usually storm runoff, flowing in a thin layer over the ground surface.

SIDE SLOPES (ENGINEERING) - The slope of the sides of a canal, dam or embankment. It is customary to name the horizontal distance first, as 1.5 to 1, or frequently, 1 1/2 : 1, meaning a horizontal distance of 1.5 feet to 1 foot vertical.

SILT - 1. (Agronomy) A soil separate consisting of particles between 0.05 and 0.002 millimeter in equivalent diameter. 2. A soil textural class. 3. (Engineering) According to the Unified Soil Classification System a fine grained soil (more than 50 percent passing the No. 200 sieve) that has a low plasticity index in relation to the liquid limit.

SLURRY - A thickened, aqueous mixture of such things as seed, fertilizer, short fiber mulch or soil.

SMALL GRAIN MULCH MATERIAL - Straw material from oats, barley, wheat, or rye.

SOD - A piece of earth containing grass plants with their matted roots. Turf.

SOIL - 1. (Agronomy) the unconsolidated mineral and organic material on the immediate surface of the earth that serves as a natural medium for the growth of land plants. 2. (Engineering) Earth and rock particles resulting from the physical and chemical disintegration of rocks, which may or may not contain organic matter. It includes fine material (silts and clays), sand and gravel.

SOIL TEST - Chemical analysis of soil to determine needs for fertilizers or amendments for species of plant being grown.

SPECIFIC ENERGY - The average energy per unit weight of water at a channel section as expressed with respect to the channel bottom.

SPILLWAY - An open or closed channel, or both, used to convey excess water from a reservoir. It may contain gates, either manually or automatically controlled to regulate the discharge of excess water.

SPREADER (HYDRAULICS) - A device for distributing water uniformly in or from a channel.

STABILIZATION - Providing adequate measures, vegetative and/or structural that will prevent erosion from occurring.

STABILIZED AREA - An area sufficiently covered by erosion resistant material such as a good cover of grass, or paving by asphalt, concrete, or stone, in order that erosion of the underlying soil does not occur.

STABILIZED GRADE - The slope of a channel at which neither erosion nor deposition occurs.

STABLE (STREAM OR CHANNEL) - The condition of a stream, channel or other water course in which no erosion or deposition occurs; adequately protected from erosion.

STAGE (HYDRAULICS) - The variable water surface or the water surface elevation above any chosen datum.

STATIC HEAD - Head resulting from elevation differences, for example, the difference in elevation in headwater and tailwater in a hydroelectric plant.

STILLING BASIN - An open structure or excavation at the foot of an outfall, conduit, chute, drop, or spillway to reduce the energy of the descending stream of water.

STOLON - A trailing or reclining above ground stem capable of rooting and/or sending up new shoots from the nodes.

STRUCTURAL - Relating to something constructed or built by man.

STRUCTURAL (SOIL) - The combination or arrangement of primary soil particles into secondary particles, units or peds. (Dune sand is structureless)

SUBCRITICAL FLOW - Flow at velocities less than critical velocity.

SUBGRADE - The soil prepared and compacted to support a structure or a pavement system.

TAILWATER (HYDRAULICS) - Water, in a river or channel, immediately downstream from a structure.

TEMPORARY SEEDING - A seeding which is made to provide temporary cover for the soil while waiting for further construction or other activity to take place.

TERRACE - An embankment or combination of an embankment and channel constructed across a slope at a suitable spacing to control erosion by diverting or storing surface runoff instead of permitting it to flow uninterrupted down the slope. Normally used only on cropland.

TEXTURE (SOIL) - The relative proportions of various soil separates in a soil material.

THATCH - A tightly intermingled layer of living and dead stems, leaves and roots of grasses.

TIDAL BANKS - Vertical or sloping banks adjoining oceans, rivers, bays, estuaries, etc. which are affected by fluctuations of daily tides.

TIME OF CONCENTRATION - Time required for water to flow from the most remote point of a watershed, in a hydraulic sense, to the outlet.

TOE (OF SLOPE) - Where the slope stops or levels out. Bottom of the slope.

TOE WALL - Downstream wall of a structure, usually to prevent flowing water from eroding under the structure.

TOPSOIL - Fertile or desirable soil material used to top dress roadbanks, subsoils, parent material, etc.

TRAP EFFICIENCY - The capability of a reservoir to trap sediment. The ratio of sediment trapped to the sediment delivered, usually expressed in percent.

TRASH RACK - Grill, grate or other device at the intake of a channel, pipe, drain or spillway for the purpose of preventing oversize debris from entering the structure.

UNHULLED (SEED) - Seed still encased with a hull. Example: Sericea lespedeza before it is rendered hulless by mechanically removing the hull.

UNIFIED SOIL CLASSIFICATION SYSTEM (ENGINEERING) - A classification system based on the identification of soils according to their particle size, gradation, plasticity index and liquid limit.

UNIFORM FLOW - A state of steady flow when the mean velocity and cross-sectional area are equal at all sections of a reach.

UNIVERSAL SOIL LOSS EQUATION - An equation used for the design of water erosion control system: A=RKLSCP where A is average annual soil loss in tons per acre per year; R is rainfall factor; K is soil erodibility factor; L is length of slope; S is percent of slope; C is cropping and management factor; and P is conservation practice factor.

UPLIFT (HYDRAULICS) - The upward force of water on the base or underside of a structure.

VARIETY - A variant within a species which reproduces true by seed or vegetative propagation.

VELOCITY HEAD (HYDRAULICS) - Head due to the velocity of a moving fluid, equal to the square of the mean velocity divided by twice the acceleration due to gravity (32.16 feet per second per second).

WATER SURFACE PROFILE (HYDRAULICS) - The longitudinal profile assumed by the surface of a stream flowing in an open channel; the hydraulic grade line.

WEEP-HOLES (ENGINEERING) - Openings left in retaining walls, aprons, linings or foundations to permit drainage and reduce pressure.

WET STORAGE - The wet storage area is the 1800 cubic feet in the permanent pool of water in a sediment trap or basin.

WETTED PERIMETER (HYDRAULICS) - The length of the line of intersection of the plane or the hydraulic cross-section with the wetted surface of the channel.

WING WALL - Side wall extensions of a structure used to prevent sloughing of banks or channels and to direct and confine overfall.

WOOD FIBER - A short fiber mulch material, usually applied with a hydro-seeder in an aqueous mixture.

32.0 SOIL CONSERVATION SERVICE RECOMMENDED WETLAND PLANT LIST

WOODY WETLAND PLANT LIST

TREES

FACW[45]	Acer saccharinum - Silver maple	
FAC[46]	A. negundo - Box elder	
FAC	A. rubrum - Red maple	
FACW	A. rubrum var. trilobum - swamp maple	
OBL[47]	Chamaecyparis thyoides - Atlantic white cedar	c
FACW	Celtis laevigata - Sugarberry (rare in Maryland)	*
FACW	Fraxinus pennsylvanica - Green ash	
FAC	F. nigra - Black ash	
OBL	F. caroliniana - Carolina ash	
FAC	Nyssa sylvatica - Black gum	
OBL	F. caroliniana var. biflora - swamp tupelo	
OBL	Pinus serotina - Pond pine	c
FACW	Platanus occidentialis - Sycamore	
FACW	Populus heterophylla - Swamp cottonwood	
FAC	P. deltoides - Eastern cottonwood	
FACW	Quercus palustrus - Pin oak	*
FAC	Q. imbricaria - Shingle oak	*
FACW	Q. macrocarpa - Bur oak	*
FACW	Q. michauxii - Swamp chestnut oak	*
OBL	Q. lyrata - Overcup oak	*
OBL	Taxodium distichum - Bald cypress	
FACW	Ulmus rubra - Slippery elm	

SUBCANOPY AND SMALL TREE SPECIES

FACW	Betula migra - River birch	
FAC	Carpinus caroliniana - Hornbeam	
OBL	Gleditsa aquatica - Water locust	
FACW	Lindera benzoin - Spicebush	
FACW	Salix nigra - Black willow	
OBL	S. caroliniana - Carolina willow	
OBL	S. sericea - (Western MD. only)	

SHRUBS

FACW	Aronia arbutifolia - Red chokeberry	*
FACW	A. prunifolia - Purple chokeberry	*
OBL	Alnus serrulata - Smooth alder	c
FACW	A. rugosa - montane only	c
OBL	A. maritima - coastal only	

[45] Facultative wet plants - soils are wet 99 - 66 % of the time.

[46] Facultative - soils are wet 66 - 33 % of the time.

[47] Obligate plants are used in soils that are wet 99 % or greater.

OBL	Cephalanthus occidneitalis - Buttonbush	c
FAC	Clethra alnifolia - Pepperbush	
FACW	Cornus amomum - Kinnikinnik	*
FAC	C. asperifolia - Rough leaf dogwood	*
FACW	C. stolonifera - Red osier	*
OBL	Ilex amelanchier - Sarvis holly	*
FACW	I. coriacesa - Baygall holly	
FACW	I. decidua - Deciduous holly	*
FACW	I. glabra - Inkberry	
OBL	I. laevigata - Smooth holly	
FACW	I. verticellata - Winterberry	*
OBL	Itea virginica - Virginia willow	
FACW	Leucothoe racemosa - Swamp leucothoe	c
FACW	Lyonia ligustrina - Maleberry	
FAC	L. mariana - coastal only	
OBL	Rhodeodendron viscosum - Swamp honey suckle	
FACW	Sambucus canadensis - Elderberry	*
FAC	Symplocus tinctoria - Horse sugar	
FACW	Vaccinium corymbosum - Highbush blueberry	*
FAC	Viburnum (alnifolium) lantanoides - hobble bush	*
FACW	V. cassinoides - wild raisin	*
FAC	V. dentatum - Southern arrowwood	*
OBL	V. nudum - Possum haw	*
FACW	V. prunifolium - Black haw	*
FACW	V. recognitum - Southern arrowwood	*

* Wildlife food
c Wildlife cover

HERBACEOUS SPECIES
(G=grass R=rush S=sedge)

FINAL WATER DEPTH: 0-3"

OBL	Acorus calimus - sweet flag	
FACW	Agrostis alba- redtop	G
FACW	A. stolonifer - bent grass	G
OBL	Asclepias incarnata - swamp milkweed	
FACW	Briza minor - quaking grass	G
FACW	Calamagrostis canadensis - bluejoint	G
OBL	C. cinnoides - reed bentgrass	G
OBL	Caltha palustris - marsh marigold	
OBL	Chelone glabra - turtle head	
FACW	Cinna arundinacea - wood reedgrass	G
OBL	Coelorachis (Manisuris) regosa - wrinkled jointgrass	G
FAC	Dichanthelium (Panicum) clandestinum - deer tongue	G
FACW	Dichronema colorata - colorful sedge	S
OBL	Epilobium colortatum - williw hern	
OBL	Erianthus brevibarbis - shortbeard plume grass	G
OBL	E. strictus - narrow plume grass	G
FACW	Equisetum hyemale - scouring rush	

OBL	Glyceria borealis - floating mana grass	G
OBL	G. candensis - mana grass	G
OBL	G. maxima - reed meadow grass	G
OBL	G. melciarpa - melic mana grass	G
OBL	G. septronbalis - eastern mana grass	G
OBL	G. striata - fowl mana grass	G
OBL	Hibiscus moscheutos - marsh mallow	
OBL	H. laevis (militaris) - halbred leaved mallow	
FACW	Juncus effusus - soft rush	R
OBL	Leersia oryzoides - rice cut grass	G
FACW	L. virginica - white grass	G
FACW	Lobelia siphlitaica - blue lobelia	
FACW	Onoclea sensibilis - sensitive fern (on seeps also)	
FACW	Osmunda cinnamomea - cinnamon fern	
FAC	Panicum virgatum - switch grass	G
OBL	Peltandra virginica - arum	
FACW	Phalaris arundinacea - reed canary grass	G
FACW	P. caroliniana - Carolina canary grass	G
FACW	Poa palustris - fowl bluegrass	G
OBL	Polygonum amphibium - water smartweed	
OBl	P. arifolium - tear thumb	
OBL	P. densiflorum - dense flower smartweed	
OBL	P. hydropiper - marshpepper	
OBL	P. hydropiperoides - swamp smartweed	
OBL	P. setaceum - swamp smartweed	
OBL	P. sagittatum - tear thumb	
FACW	Scripus cyperinus - bulrush	S
OBL	Spartina cynosuroides - Big cordgrass	G
OBL	S. pectinata - prairie cordgrass	G
OBL	Sphenopholis pensylvanica - swamp wedgescale	G
FACW	Woodwardia virginica - chain fern	
OBL	Zinzania aquatica - wild rice	G
OBL	Zizaniopsis miliacea - southern wild rice	G

FINAL WATER DEPTH: 0-6"

OBL	Carex crinata - fringed sedge	S
OBL	Carex folliculata-long sedge	S
OBL	Carex lurida - shallow sedge	S
OBL	Carex stricta - uptight sedge	S
OBL	Carex vulpinoidea - fox sedge	S
OBL	Dulichium arundinaceum - threeway sedge	S
OBL	Eriophorum virginicum - Cotton grass	S
OBL	Iris prismatica - iris	
OBL	Iris virginiana - iris	
OBL	Lachnanthes caroliniana - red root	
OBL	Lactocaulon anceps - hat pins	
OBL	Pontederia cordata - pickerel weed	
OBL	Rumex verticillauts - Swamp doc	
OBL	Scirpus americanus - trisquare	S
OBL	S. atrovirens - green bullrush	S
OBL	S. valudis - soft stem bullrush	S
OBL	Sparganium americanum - Bur reed	
OBL	Spartina alterniflora - Saltmarsh cordgrass	G